Dist	COUNTY	ROUTE	POST MILES TOTAL PROJECT	SHEET No.	TOTAL SHEETS
04	Ala,SCl	680	0.0/0.1, 0.1/9.9	1	319

ACIM-680-1(068)E

STATE OF CALIFORNIA
DEPARTMENT OF TRANSPORTATION

PROJECT PLANS FOR CONSTRUCTION ON
STATE HIGHWAY

IN ALAMEDA AND SANTA CLARA COUNTIES
IN MILPITAS AND SAN JOSE
FROM ROUTE 280-680/101 SEPARATION
TO SCOTT CREEK ROAD UNDERCROSSING

TO BE SUPPLEMENTED BY STANDARD PLANS DATED 2006

INDEX OF PLANS

SHEET No.	DESCRIPTION
1	TITLE AND LOCATION MAP
2-5	TYPICAL CROSS SECTIONS
6-30	LAYOUTS
31	CONSTRUCTION DETAILS
32-53	EROSION CONTROL PLANS AND QUANTITIES
54-84	DRAINAGE PLANS, PROFILES, DETAILS AND QUANTITIES
85	UTILITY PLANS
86-103	CONSTRUCTION AREA SIGNS AND DETOUR PLANS
104-127	STAGE CONSTRUCTION PLANS AND QUANTITIES
128-154	PAVEMENT DELINEATION PLANS AND QUANTITIES
155-170	SIGN PLANS, DETAILS AND QUANTITIES
171-173	SUMMARY OF QUANTITIES
174-222	ELECTRICAL PLANS
223-228	LOG OF TEST BORINGS
229-277	REVISED AND NEW STANDARD PLANS

STRUCTURE PLANS

278-290	ALUM ROCK NB ON-RAMP RETAINING WALL
291-308	ALUM ROCK SB ON-RAMP RETAINING WALL
309-319	CAPITOL EXPRESSWAY SB ON-RAMP RETAINING WALL

THE STANDARD PLANS LIST APPLICABLE TO THIS CONTRACT IS INCLUDED IN THE NOTICE TO BIDDERS AND SPECIAL PROVISIONS BOOK.

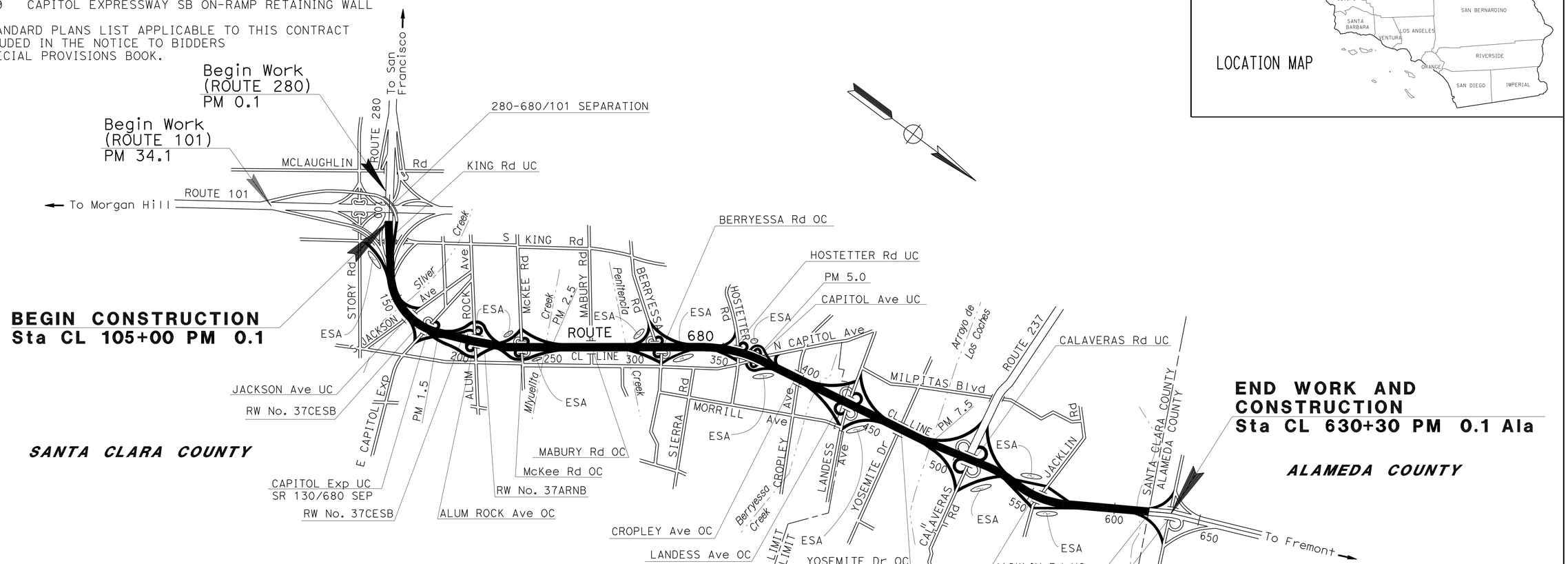

PROJECT MANAGER: FARIBA ZOHOURY

DESIGN ENGINEER: HASSAN NIKZAD

Pouroushasb 2-13-12
PROJECT ENGINEER REGISTERED CIVIL ENGINEER — DATE

May 14, 2012
PLANS APPROVAL DATE

REGISTERED PROFESSIONAL ENGINEER — Rostam Pouroushasb — No. 58173 — Exp. 6-30-12 — CIVIL — STATE OF CALIFORNIA

THE STATE OF CALIFORNIA OR ITS OFFICERS OR AGENTS SHALL NOT BE RESPONSIBLE FOR THE ACCURACY OR COMPLETENESS OF SCANNED COPIES OF THIS PLAN SHEET.

THE CONTRACTOR SHALL POSSESS THE CLASS (OR CLASSES) OF LICENSE AS SPECIFIED IN THE "NOTICE TO BIDDERS."

CONTRACT No.	04-153204
PROJECT ID	0400000426

LAST REVISION 01-26-12 — DATE PLOTTED => 28-JUN-2012 — TIME PLOTTED => 05:51

Dist	COUNTY	ROUTE	POST MILES TOTAL PROJECT	SHEET No.	TOTAL SHEETS
04	Ala,SCl	680	0.0/0.1, 0.1/9.9	2	319

REGISTERED CIVIL ENGINEER 2-13-12 DATE

5-14-12
PLANS APPROVAL DATE

REGISTERED PROFESSIONAL ENGINEER Rostam Pouroushasb No. 58173 Exp. 6-30-12 CIVIL STATE OF CALIFORNIA

THE STATE OF CALIFORNIA OR ITS OFFICERS OR AGENTS SHALL NOT BE RESPONSIBLE FOR THE ACCURACY OR COMPLETENESS OF SCANNED COPIES OF THIS PLAN SHEET.

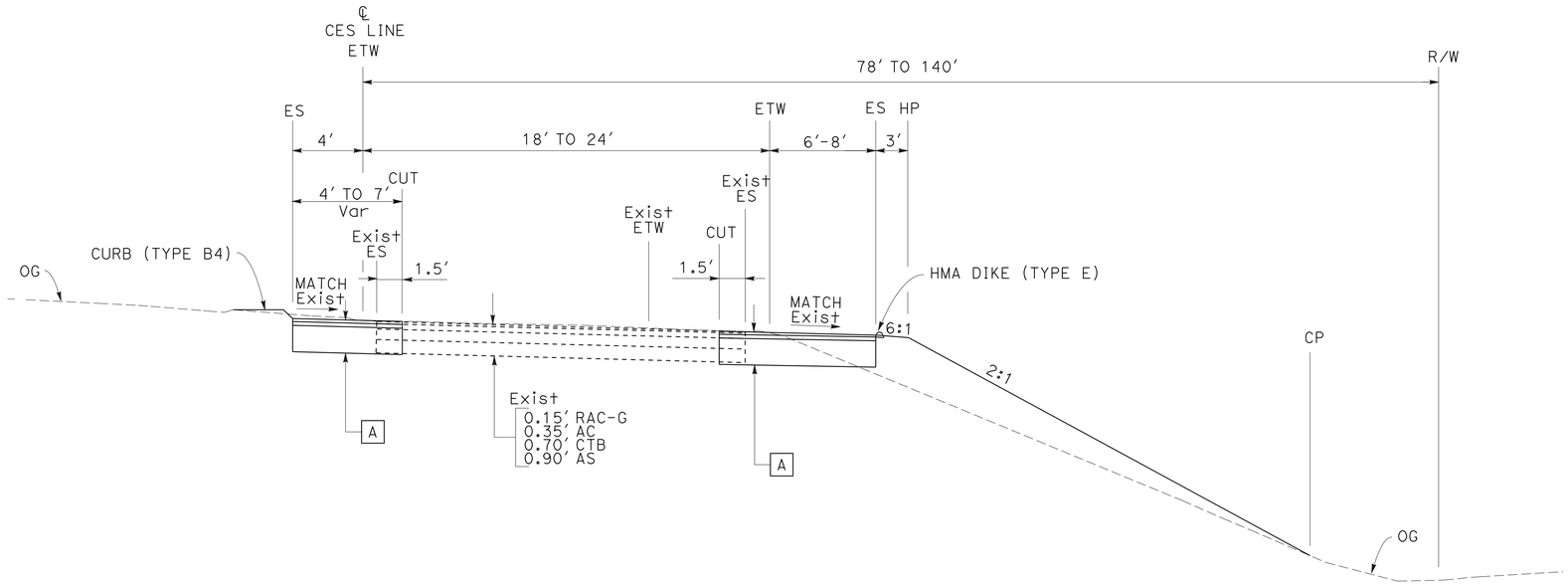

CES 10+55 TO 16+66

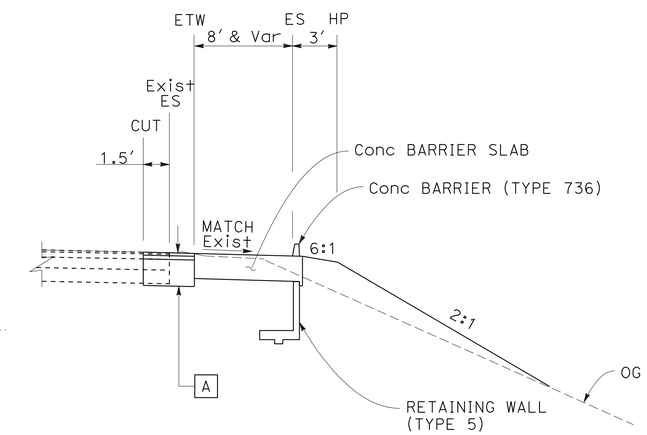

CES 14+10 TO 16+20

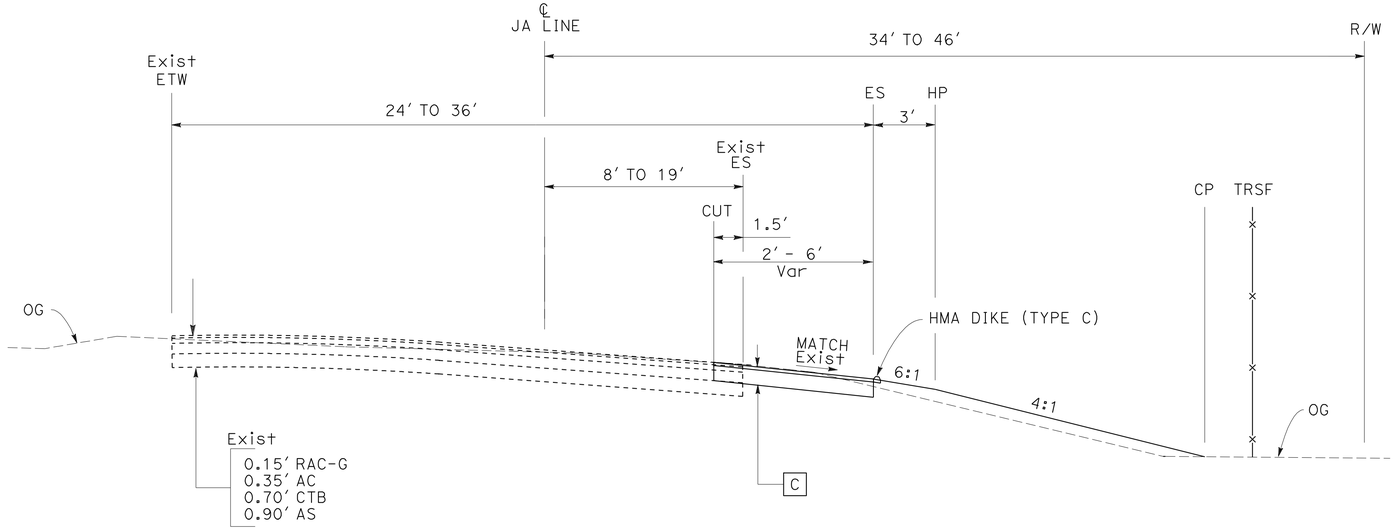

JA 15+50 TO 20+45

DESIGN DESIGNATION (SCI 680)

ADT (2012)	15000	D	56%
ADT (2032)	192000	T	5.4%
DHV	8800	V	75 mph
ESAL	37967000	TI_{20}	10

TYPICAL PAVEMENT STRUCTURE SECTIONS

A
- 0.20' RHMA (GAP GRADED)
- 0.25' HMA (TYPE A)
- 1.75' AB (Cl 3)

B
- 0.20' RHMA (GAP GRADED)
- 0.25' HMA (TYPE A)
- 1.50' AB (Cl 3)
- 1.00' Perm M+I CL 2 (BLANKET))

C
- 0.20' RHMA (GAP GRADED)
- 1.00' HMA (TYPE A)

NOTES:

1. DIMENSIONS OF THE PAVEMENT STRUCTURES (STRUCTURAL SECTIONS) ARE SUBJECT TO TOLERANCES SPECIFIED IN THE STANDARD SPECIFICATIONS.
2. EXCAT LOCATIONS AND TYPES OF DIKE, CURB, GUARD RAILING, CONCRETE BARRIER ARE SHOWN ON THE LAYOUTS AND THE SUMMARY OF QUANTITIES SHEETS
3. EXACT LOCATIONS AND TYPES OF RETAINING WALL, CONCRETE BARRIER AND SLAB ARE SHOWN ON THE RETAINING WALL LAYOUTS

ABBREVIATION:

RHMA	RUBBERIZED HOT MIX ASPHALT
TRSF	TEMPORARY REINFORCED SILT FENCE

TYPICAL CROSS SECTIONS

NO SCALE

X-1

STATE OF CALIFORNIA - DEPARTMENT OF TRANSPORTATION
Caltrans®
DESIGN

FUNCTIONAL SUPERVISOR: HASSAN NIKZAD
CALCULATED-DESIGNED BY: ROSTAM POUROUSHASB
CHECKED BY: QUYNH P. NGUYEN
REVISED BY / DATE REVISED

LAST REVISION 02-08-12 | DATE PLOTTED => 14-MAY-2012 | TIME PLOTTED => 12:56

Dist	COUNTY	ROUTE	POST MILES TOTAL PROJECT	SHEET No.	TOTAL SHEETS
04	Ala,SCl	680	0.0/0.1, 0.1/9.9	3	319

REGISTERED CIVIL ENGINEER 2-13-12 DATE

5-14-12
PLANS APPROVAL DATE

REGISTERED PROFESSIONAL ENGINEER Rostam Pouroushasb No. 58173 Exp. 6-30-12 CIVIL STATE OF CALIFORNIA

THE STATE OF CALIFORNIA OR ITS OFFICERS OR AGENTS SHALL NOT BE RESPONSIBLE FOR THE ACCURACY OR COMPLETENESS OF SCANNED COPIES OF THIS PLAN SHEET.

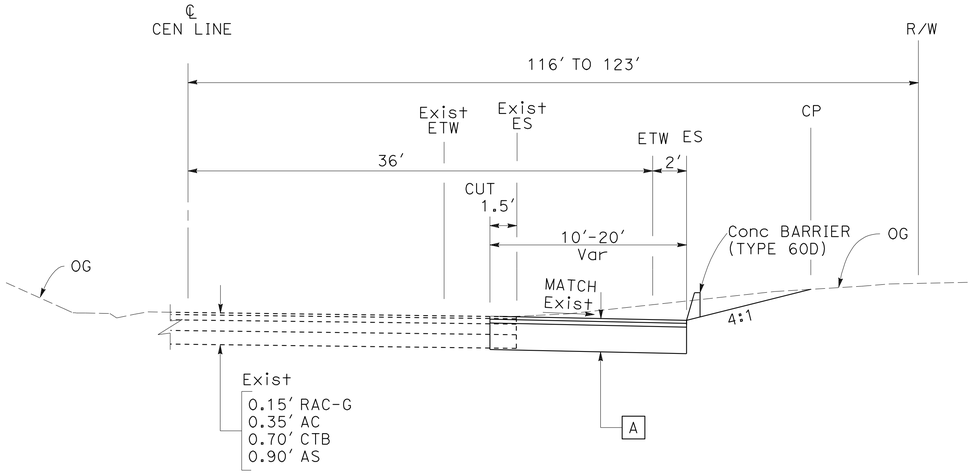

CEN 16+15 TO 24+20

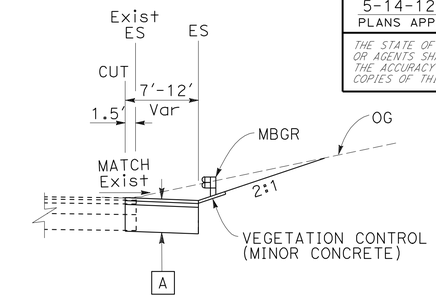

ARS 21+50 TO 23+90

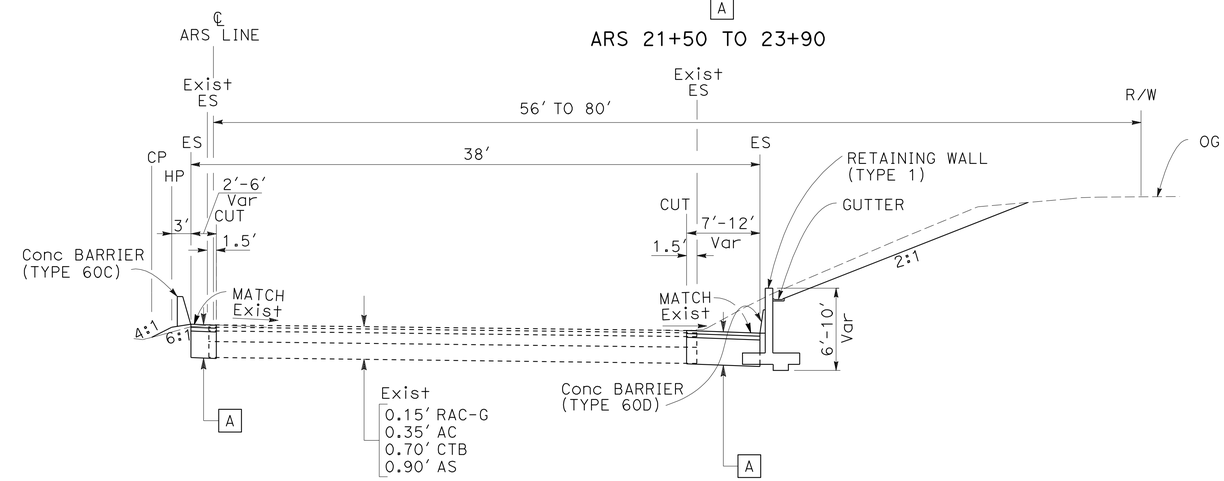

ARS 17+03.14 TO 23+90

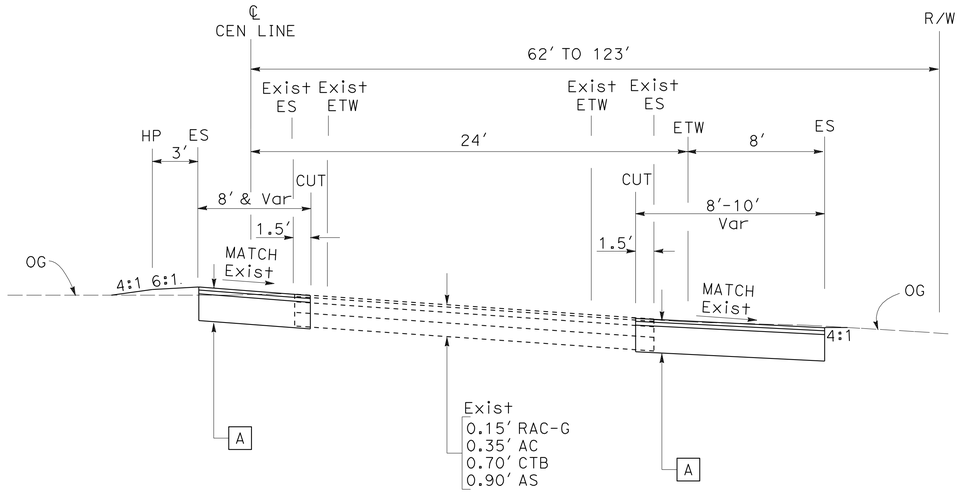

CEN 13+35 TO 16+15

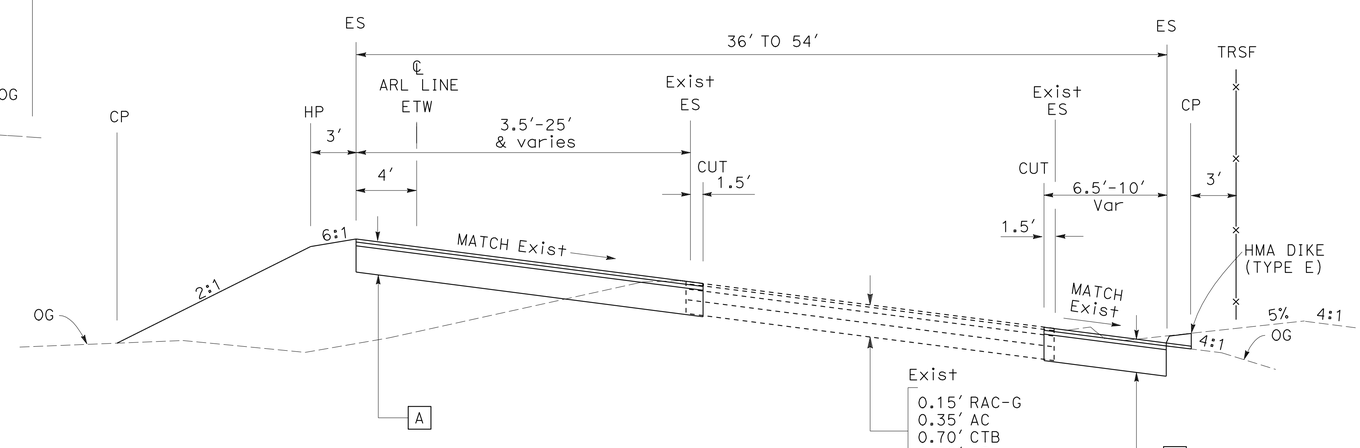

ARL 10+10 TO ARL 17+58.24

TYPICAL CROSS SECTIONS

NO SCALE

FOR NOTES, ABBREVIATIONS AND LEGEND, SEE SHEET X-1

X-2

STATE OF CALIFORNIA - DEPARTMENT OF TRANSPORTATION
DESIGN
Caltrans

FUNCTIONAL SUPERVISOR: HASSAN NIKZAD
CALCULATED-DESIGNED BY: QUYNH P. NGUYEN
CHECKED BY: ROSTAM POUROUSHASB
REVISED BY
DATE REVISED

LAST REVISION 02-08-12
DATE PLOTTED => 15-MAY-2012
TIME PLOTTED => 11:05

Dist	COUNTY	ROUTE	POST MILES TOTAL PROJECT	SHEET No.	TOTAL SHEETS
04	Ala,SCl	680	0.0/0.1, 0.1/9.9	4	319

REGISTERED CIVIL ENGINEER 2-13-12 DATE

5-14-12
PLANS APPROVAL DATE

REGISTERED PROFESSIONAL ENGINEER Rostam Pouroushasb No. 58173 Exp. 6-30-12 CIVIL STATE OF CALIFORNIA

THE STATE OF CALIFORNIA OR ITS OFFICERS OR AGENTS SHALL NOT BE RESPONSIBLE FOR THE ACCURACY OR COMPLETENESS OF SCANNED COPIES OF THIS PLAN SHEET.

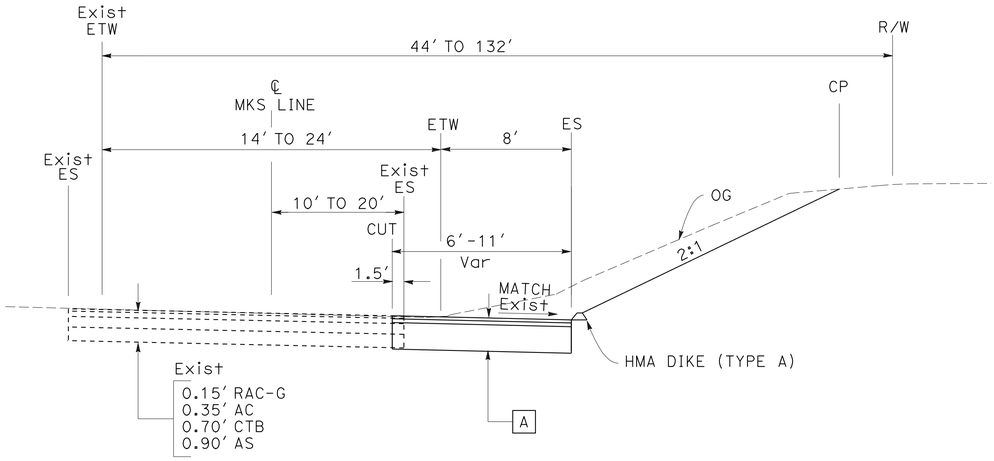

MKS 17+80 TO 23+45

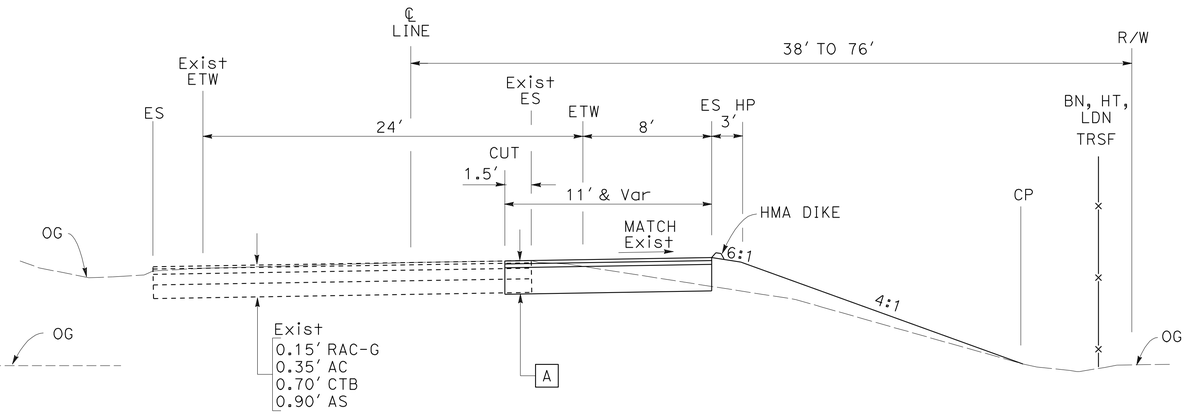

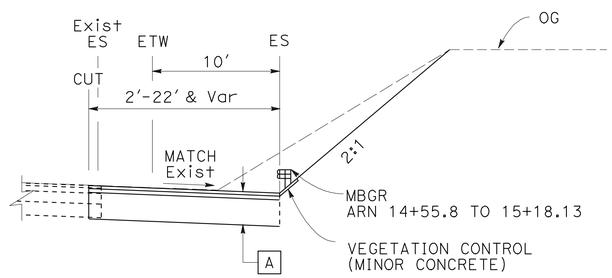

ARN 10+45.00 TO 15+18.13

BS 14+10 TO 21+32
BN 13+60 TO 21+52
HT 17+47.80 TO 26+20
LDS 15+50 TO 22+15
LDN 15+70 TO 23+98.94
CS 27+20 TO 32+80
CN 25+40 TO 30+78.90

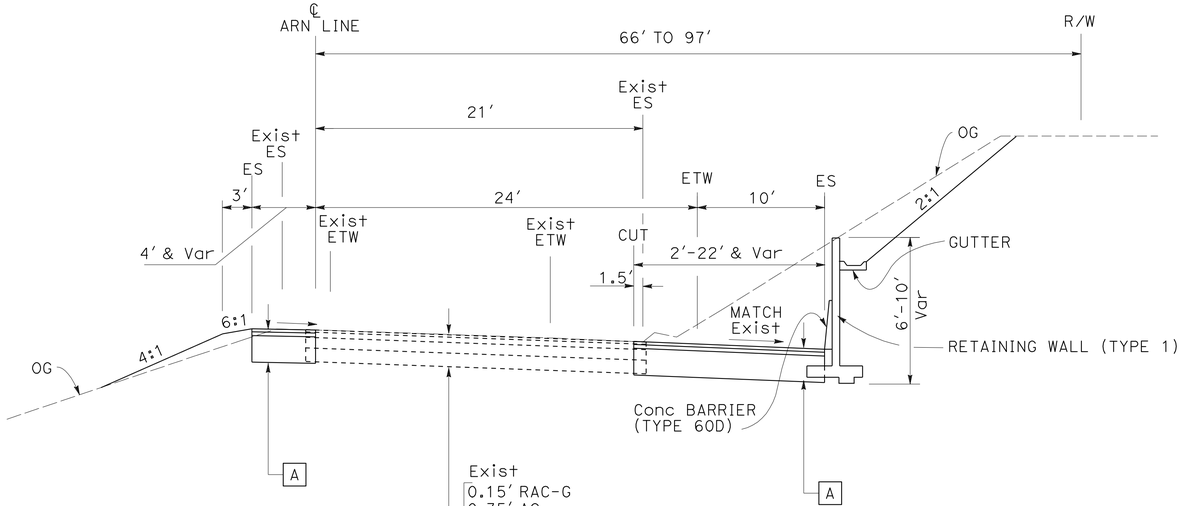

ARN 10+45.00 TO 19+32.19

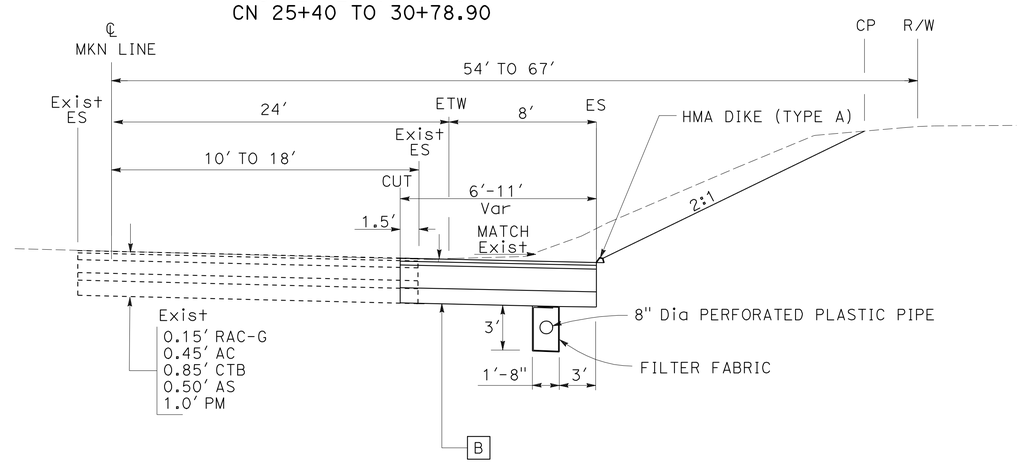

MKN 10+90 TO 19+30

TYPICAL CROSS SECTIONS

NO SCALE

FOR NOTES, ABBREVIATIONS AND LEGEND, SEE SHEET X-1

X-3

STATE OF CALIFORNIA - DEPARTMENT OF TRANSPORTATION
Caltrans DESIGN

FUNCTIONAL SUPERVISOR: HASSAN NIKZAD
CALCULATED-DESIGNED BY: QUYNH P. NGUYEN
CHECKED BY: ROSTAM POUROUSHASB
REVISED BY
DATE REVISED

LAST REVISION 02-08-12
DATE PLOTTED => 14-MAY-2012
TIME PLOTTED => 13:15

Dist	COUNTY	ROUTE	POST MILES TOTAL PROJECT	SHEET No.	TOTAL SHEETS
04	Ala,SCl	680	0.0/0.1, 0.1/9.9	5	319

REGISTERED CIVIL ENGINEER 2-13-12 DATE

5-14-12
PLANS APPROVAL DATE

REGISTERED PROFESSIONAL ENGINEER Rostam Pouroushasb No. 58173 Exp. 6-30-12 CIVIL STATE OF CALIFORNIA

THE STATE OF CALIFORNIA OR ITS OFFICERS OR AGENTS SHALL NOT BE RESPONSIBLE FOR THE ACCURACY OR COMPLETENESS OF SCANNED COPIES OF THIS PLAN SHEET.

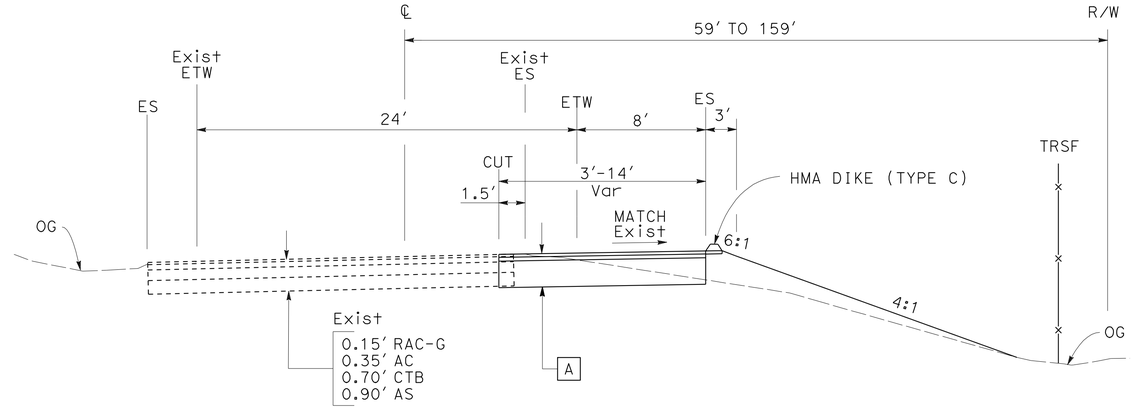

JS 11+40 TO 23+83
JN 11+50 TO 23+30
SC 11+07 TO 20+37

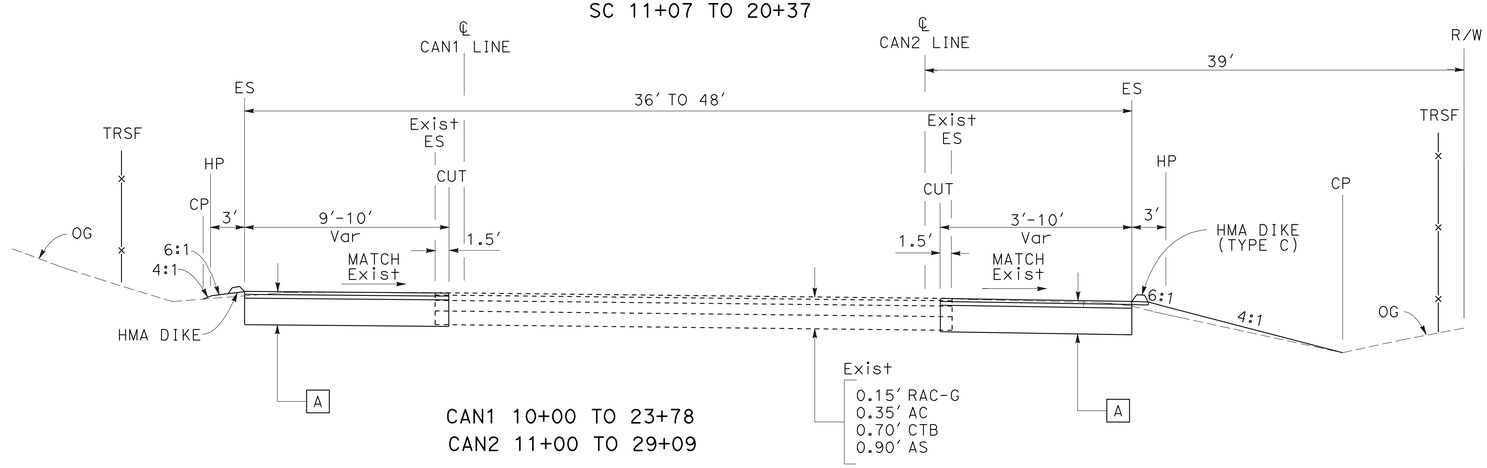

CAN1 10+00 TO 23+78
CAN2 11+00 TO 29+09

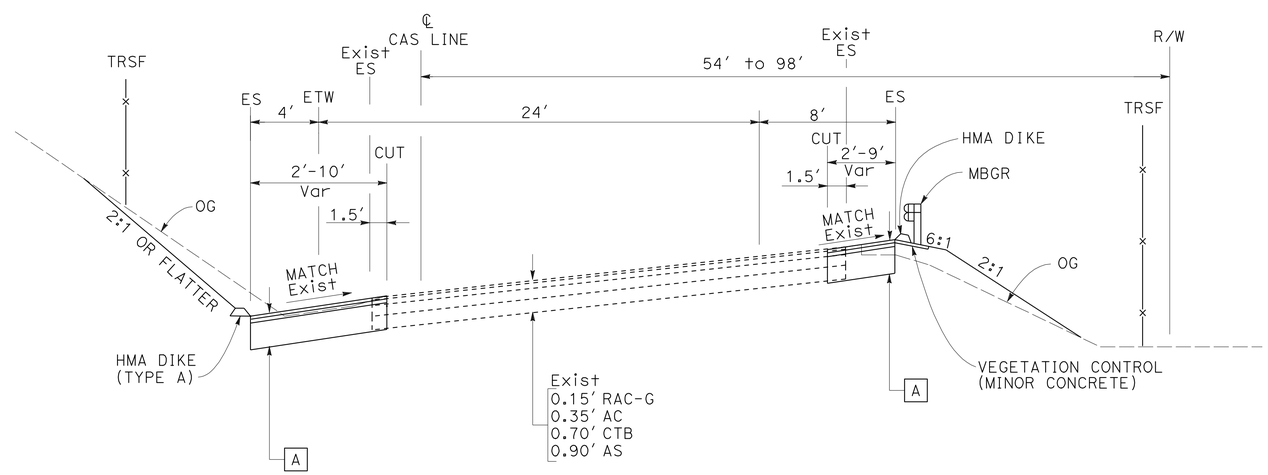

CAS 10+00 TO 21+92

TYPICAL CROSS SECTIONS

NO SCALE

FOR NOTES, ABBREVIATIONS AND LEGEND, SEE SHEET X-1

X-4

REVISED BY | DATE REVISED

CALCULATED-DESIGNED BY: QUYNH P. NGUYEN
CHECKED BY: ROSTAM POUROUSHASB

FUNCTIONAL SUPERVISOR: HASSAN NIKZAD

STATE OF CALIFORNIA - DEPARTMENT OF TRANSPORTATION
DESIGN

LAST REVISION 02-08-12 | DATE PLOTTED => 15-MAY-2012 | TIME PLOTTED => 11:05

Dist	COUNTY	ROUTE	POST MILES TOTAL PROJECT	SHEET No.	TOTAL SHEETS
04	Ala,SCl	680	0.0/0.1, 0.1/9.9	6	319

REGISTERED CIVIL ENGINEER 2-13-12 DATE

5-14-12
PLANS APPROVAL DATE

REGISTERED PROFESSIONAL ENGINEER Rostam Pouroushasb No. 58173 Exp. 6-30-12 CIVIL STATE OF CALIFORNIA

THE STATE OF CALIFORNIA OR ITS OFFICERS OR AGENTS SHALL NOT BE RESPONSIBLE FOR THE ACCURACY OR COMPLETENESS OF SCANNED COPIES OF THIS PLAN SHEET.

NOTE:

FOR ACCURATE RIGHT OF WAY DATA, CONTACT RIGHT OF WAY ENGINEERING AT THE DISTRICT OFFICE.

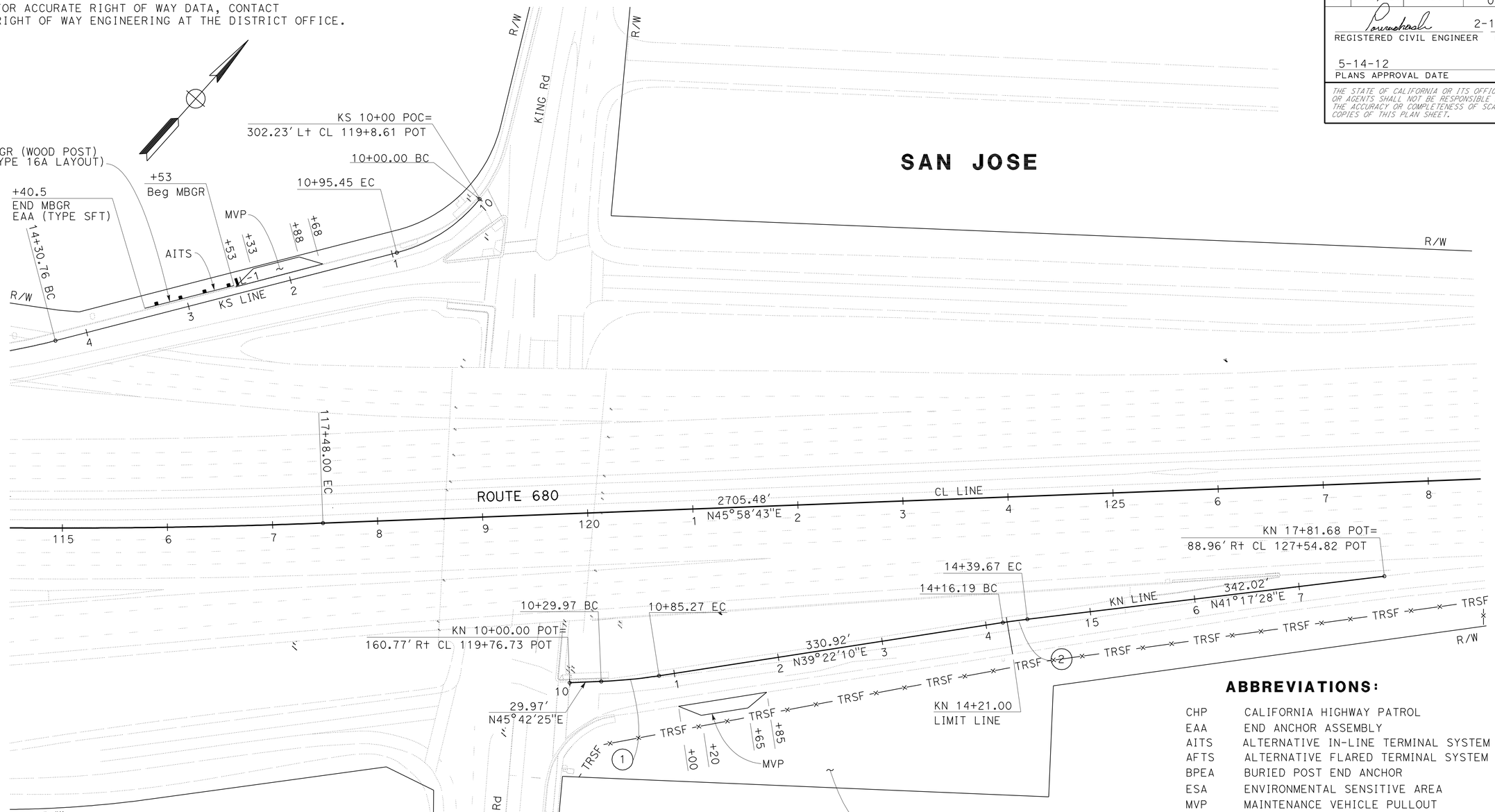

ABBREVIATIONS:

CHP	CALIFORNIA HIGHWAY PATROL
EAA	END ANCHOR ASSEMBLY
AITS	ALTERNATIVE IN-LINE TERMINAL SYSTEM
AFTS	ALTERNATIVE FLARED TERMINAL SYSTEM
BPEA	BURIED POST END ANCHOR
ESA	ENVIRONMENTAL SENSITIVE AREA
MVP	MAINTENANCE VEHICLE PULLOUT

LEGEND:

- STRUCTURAL SECTION
- (No.) CURVE DATA
- Exist IRRIGATION CROSSOVER
- IRRIGATION CROSSOVER
- TRSF TEMPORARY REINFORCED SILT FENCE
- L-1 OBJECT MARKER TYPE L-1

NOTES:

1. FOR DETAILS OF MAINTENANCE VEHICLE PULLOUT, SEE SHEET C-1.
2. FOR DETAILS OF ELECTRICAL WORK AND EQUIPMENT, SEE ELECTRICAL PLANS.
3. FOR DETAILS OF RETAINING WALLS, SEE RETAINING WALL PLANS.

CURVE DATA

No.	R	Δ	T	L	N-COORDINATE	E-COORDINATE
1	500'	06° 20' 16"	27.68'	55.31'	1950560.190	6170091.060
2	700'	01° 55' 15"	11.74'	23.45'	1950054.700	6171228.800

LAYOUT

SCALE: 1" = 50'

L-1

STATE OF CALIFORNIA - DEPARTMENT OF TRANSPORTATION
DESIGN
FUNCTIONAL SUPERVISOR: HASSAN NIKZAD
CALCULATED-DESIGNED BY: QUYNH P. NGUYEN
CHECKED BY: ROSTAM POUROUSHASB
REVISED BY
DATE REVISED

LAST REVISION 02-08-12 | DATE PLOTTED => 14-MAY-2012 | TIME PLOTTED => 10:34

Dist	COUNTY	ROUTE	POST MILES TOTAL PROJECT	SHEET No.	TOTAL SHEETS
04	Ala,SCl	680	0.0/0.1, 0.1/9.9	7	319

REGISTERED CIVIL ENGINEER 2-13-12 DATE

5-14-12
PLANS APPROVAL DATE

REGISTERED PROFESSIONAL ENGINEER Rostam Pouroushasb No. 58173 Exp. 6-30-12 CIVIL STATE OF CALIFORNIA

THE STATE OF CALIFORNIA OR ITS OFFICERS OR AGENTS SHALL NOT BE RESPONSIBLE FOR THE ACCURACY OR COMPLETENESS OF SCANNED COPIES OF THIS PLAN SHEET.

NOTE:

FOR ACCURATE RIGHT OF WAY DATA, CONTACT RIGHT OF WAY ENGINEERING AT THE DISTRICT OFFICE.

CURVE DATA

No. ⊜	R	Δ	T	L	N-COORDINATE	E-COORDINATE
3	1388′	09° 24′ 33"	114.23′	227.94′	1953540.940	6171241.980
4	2200′	09° 02′ 47"	174.04′	347.36′	1953611.910	6170422.010

SAN JOSE

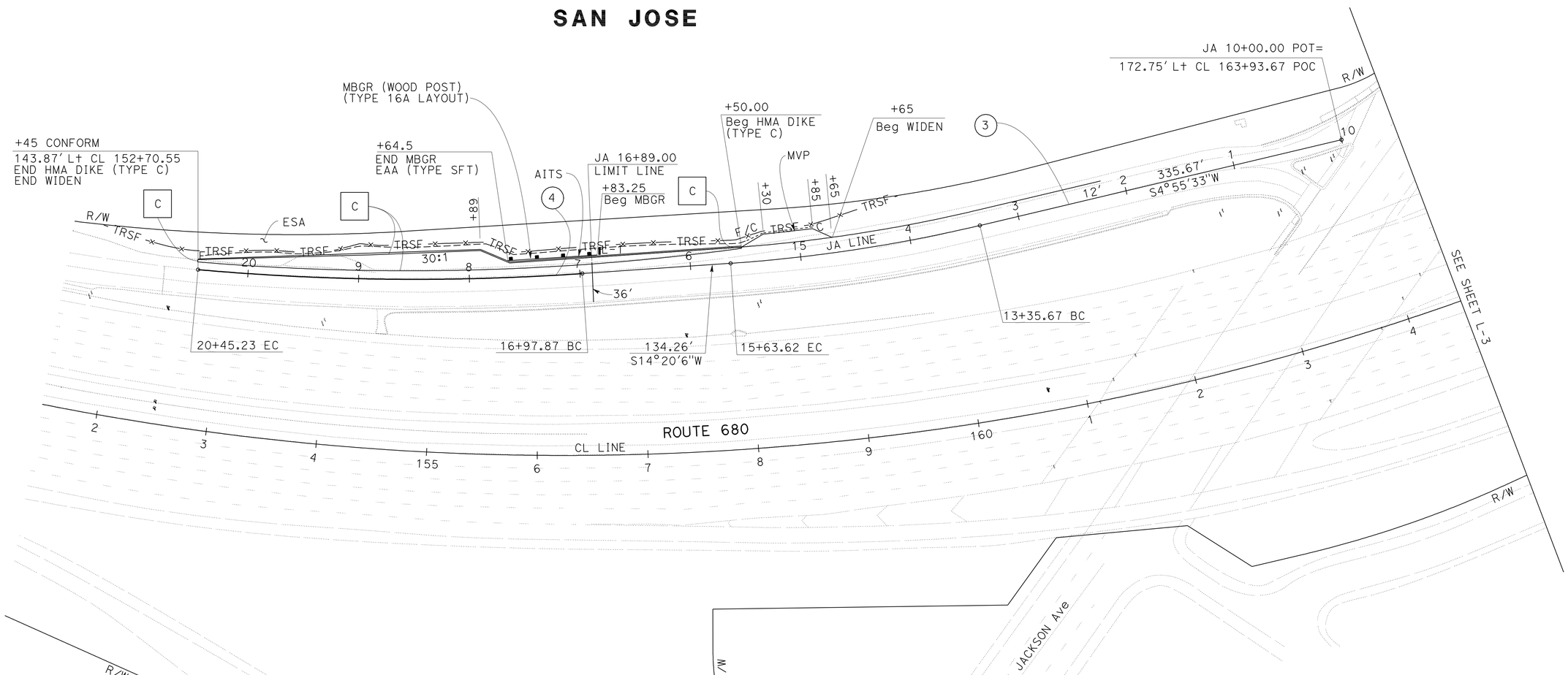

LAYOUT

SCALE: 1" = 50′

FOR NOTES, ABBREVIATIONS AND LEGEND, SEE SHEET L-1

L-2

STATE OF CALIFORNIA - DEPARTMENT OF TRANSPORTATION
Caltrans DESIGN

FUNCTIONAL SUPERVISOR: HASSAN NIKZAD
QUYNH P. NGUYEN
ROSTAM POUROUSHASB
CALCULATED-DESIGNED BY
CHECKED BY
REVISED BY
DATE REVISED

LAST REVISION 04-27-12
DATE PLOTTED => 14-MAY-2012
TIME PLOTTED => 10:34

Dist	COUNTY	ROUTE	POST MILES TOTAL PROJECT	SHEET No.	TOTAL SHEETS
04	Ala,SCl	680	0.0/0.1, 0.1/9.9	8	319

REGISTERED CIVIL ENGINEER 2-13-12 DATE

5-14-12
PLANS APPROVAL DATE

REGISTERED PROFESSIONAL ENGINEER Rostam Pouroushasb No. 58173 Exp. 6-30-12 CIVIL STATE OF CALIFORNIA

THE STATE OF CALIFORNIA OR ITS OFFICERS OR AGENTS SHALL NOT BE RESPONSIBLE FOR THE ACCURACY OR COMPLETENESS OF SCANNED COPIES OF THIS PLAN SHEET.

NOTE:

FOR ACCURATE RIGHT OF WAY DATA, CONTACT RIGHT OF WAY ENGINEERING AT THE DISTRICT OFFICE.

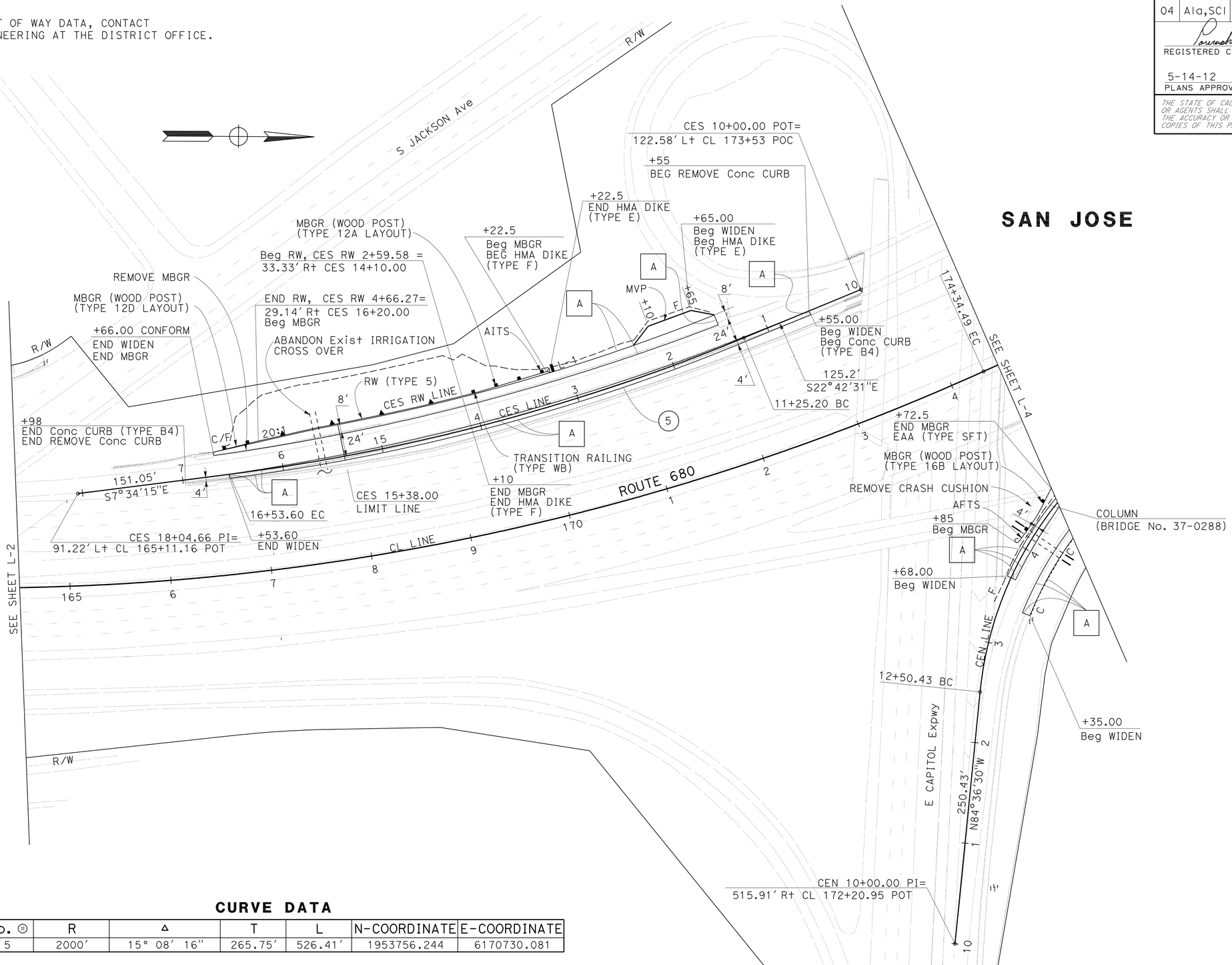

CURVE DATA

No. ⊕	R	Δ	T	L	N-COORDINATE	E-COORDINATE
5	2000'	15° 08' 16"	265.75'	526.41'	1953756.244	6170730.081

LAYOUT

SCALE: 1" = 50'

L-3

STATE OF CALIFORNIA - DEPARTMENT OF TRANSPORTATION
Caltrans
DESIGN

FUNCTIONAL SUPERVISOR: HASSAN NIKZAD
CALCULATED-DESIGNED BY: QUYNH P. NGUYEN
CHECKED BY: ROSTAM POUROUSHASB
REVISED BY
DATE REVISED

LAST REVISION 02-08-12
DATE PLOTTED => 14-MAY-2012
TIME PLOTTED => 10:34

Dist	COUNTY	ROUTE	POST MILES TOTAL PROJECT	SHEET No.	TOTAL SHEETS
04	Ala,SCl	680	0.0/0.1, 0.1/9.9	9	319

REGISTERED CIVIL ENGINEER 2-13-12 DATE

5-14-12
PLANS APPROVAL DATE

REGISTERED PROFESSIONAL ENGINEER Rostam Pouroushasb No. 58173 Exp. 6-30-12 CIVIL STATE OF CALIFORNIA

THE STATE OF CALIFORNIA OR ITS OFFICERS OR AGENTS SHALL NOT BE RESPONSIBLE FOR THE ACCURACY OR COMPLETENESS OF SCANNED COPIES OF THIS PLAN SHEET.

NOTE:

FOR ACCURATE RIGHT OF WAY DATA, CONTACT RIGHT OF WAY ENGINEERING AT THE DISTRICT OFFICE.

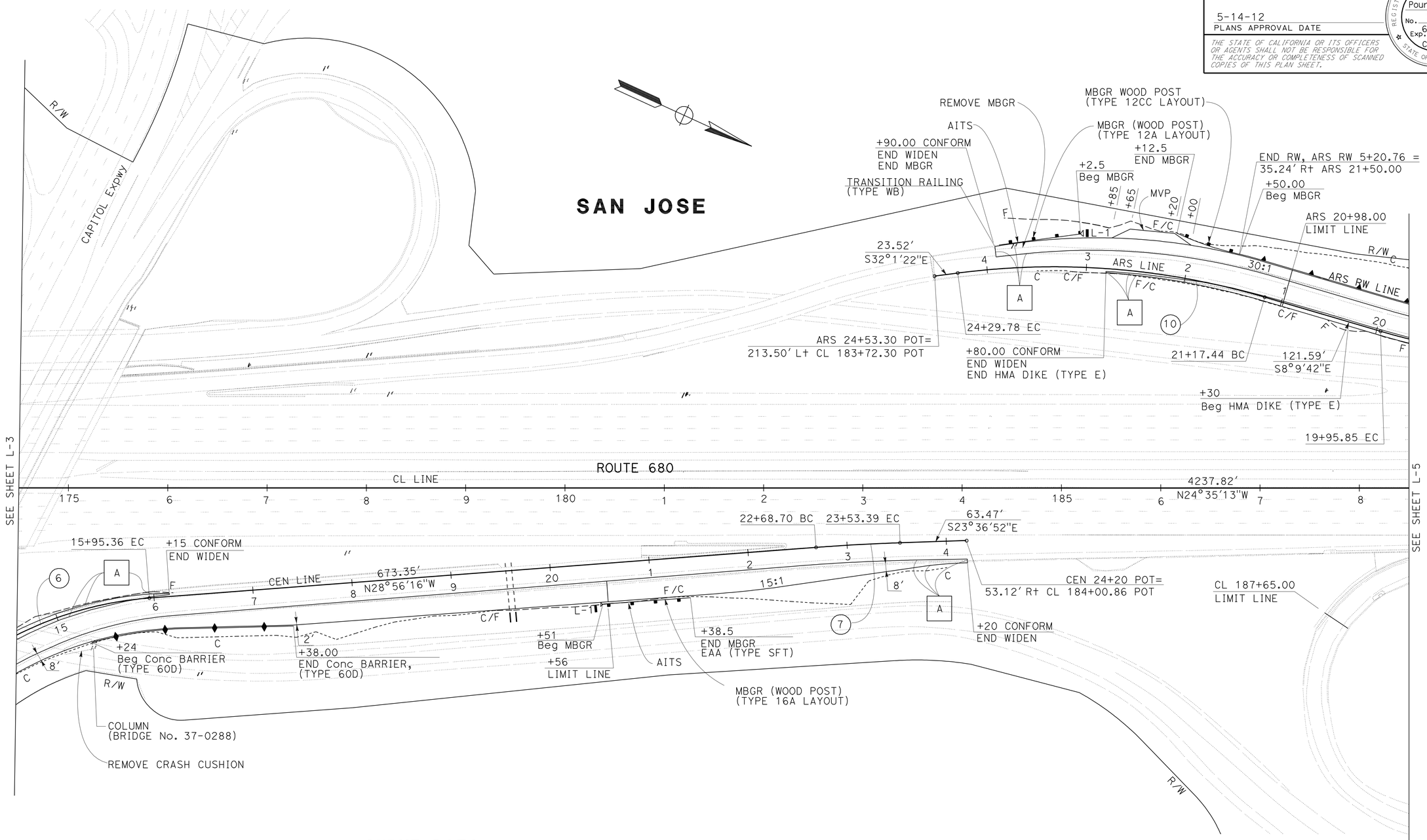

CURVE DATA

No. ⊕	R	Δ	T	L	N-COORDINATE	E-COORDINATE
6	355'	55° 40' 14"	187.45'	344.93'	1955117.310	6172957.400
7	2000'	2° 25' 33"	42.35'	84.69'	1956502.570	6174071.270
10	750'	23° 51' 40"	158.47'	312.34'	1955947.301	6172645.039

FOR NOTES, ABBREVIATIONS AND LEGEND, SEE SHEET L-1

LAYOUT

SCALE: 1" = 50'

L-4

STATE OF CALIFORNIA - DEPARTMENT OF TRANSPORTATION
DESIGN
FUNCTIONAL SUPERVISOR: HASSAN NIKZAD
CALCULATED-DESIGNED BY: QUYNH P. NGUYEN
CHECKED BY: ROSTAM POUROUSHASB
REVISED BY
DATE REVISED

LAST REVISION 01-31-12
DATE PLOTTED => 14-MAY-2012
TIME PLOTTED => 10:34

Dist	COUNTY	ROUTE	POST MILES TOTAL PROJECT	SHEET No.	TOTAL SHEETS
04	Ala,SCl	680	0.0/0.1, 0.1/9.9	10	319

REGISTERED CIVIL ENGINEER 2-13-12 DATE

5-14-12
PLANS APPROVAL DATE

REGISTERED PROFESSIONAL ENGINEER Rostam Pouroushasb No. 58173 Exp. 6-30-12 CIVIL STATE OF CALIFORNIA

THE STATE OF CALIFORNIA OR ITS OFFICERS OR AGENTS SHALL NOT BE RESPONSIBLE FOR THE ACCURACY OR COMPLETENESS OF SCANNED COPIES OF THIS PLAN SHEET.

NOTE:

FOR ACCURATE RIGHT OF WAY DATA, CONTACT RIGHT OF WAY ENGINEERING AT THE DISTRICT OFFICE.

CURVE DATA

No. ⊕	R	Δ	T	L	N-COORDINATE	E-COORDINATE
8	150′	254°24′28″	197.59′	666.04′	1956275.96	6171628.311
9	700′	11°46′27″	72.18′	143.85′	1955861.81	6171193.468
11	201′	56°14′39″	107.42′	197.31′	1956600.28	6172122.916
12	3001′	5°49′45″	152.79′	305.31′	1958401.15	6174298.576

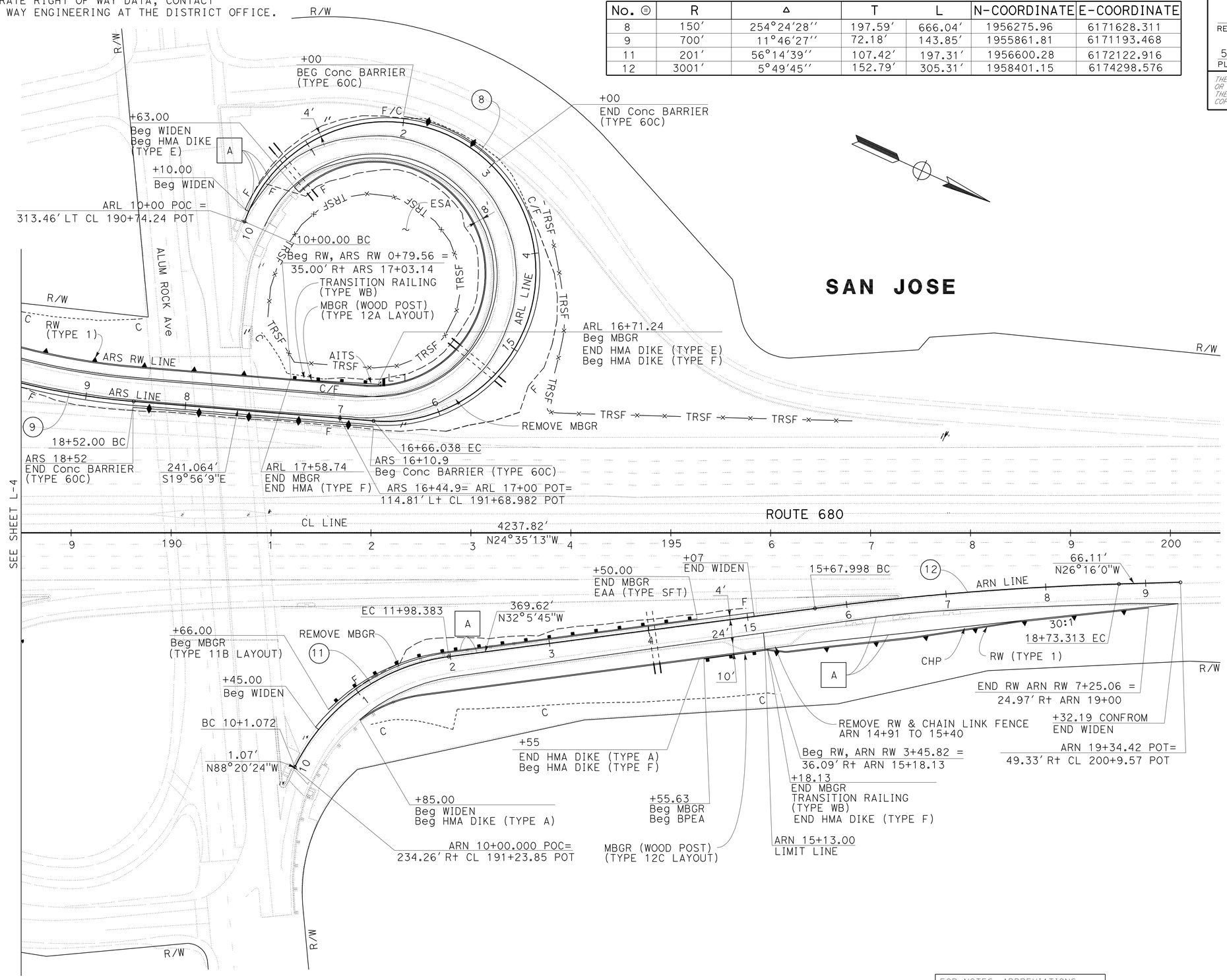

FOR NOTES, ABBREVIATIONS AND LEGEND, SEE SHEET L-1

LAYOUT

SCALE: 1" = 50′

L-5

STATE OF CALIFORNIA - DEPARTMENT OF TRANSPORTATION

Caltrans DESIGN

FUNCTIONAL SUPERVISOR: HASSAN NIKZAD

CALCULATED-DESIGNED BY: ROSTAM POUROUSHASB

CHECKED BY: QUYNH P. NGUYEN

REVISED BY / DATE REVISED

LAST REVISION 01-31-12

DATE PLOTTED => 14-MAY-2012
TIME PLOTTED => 10:34

Dist	COUNTY	ROUTE	POST MILES TOTAL PROJECT	SHEET No.	TOTAL SHEETS
04	Ala,SCl	680	0.0/0.1, 0.1/9.9	11	319

REGISTERED CIVIL ENGINEER 2-13-12 DATE

5-14-12
PLANS APPROVAL DATE

REGISTERED PROFESSIONAL ENGINEER Rostam Pouroushasb No. 58173 Exp. 6-30-12 CIVIL STATE OF CALIFORNIA

THE STATE OF CALIFORNIA OR ITS OFFICERS OR AGENTS SHALL NOT BE RESPONSIBLE FOR THE ACCURACY OR COMPLETENESS OF SCANNED COPIES OF THIS PLAN SHEET.

NOTE:

FOR ACCURATE RIGHT OF WAY DATA, CONTACT RIGHT OF WAY ENGINEERING AT THE DISTRICT OFFICE.

CURVE DATA

No. ⊛	R	Δ	T	L	N-COORDINATE	E-COORDINATE
13	412′	59° 31′ 31"	235.60′	428.03′	1958381.280	6170365.090
14	1488′	04° 52′ 01"	63.24′	126.40′	1959031.730	6172157.060

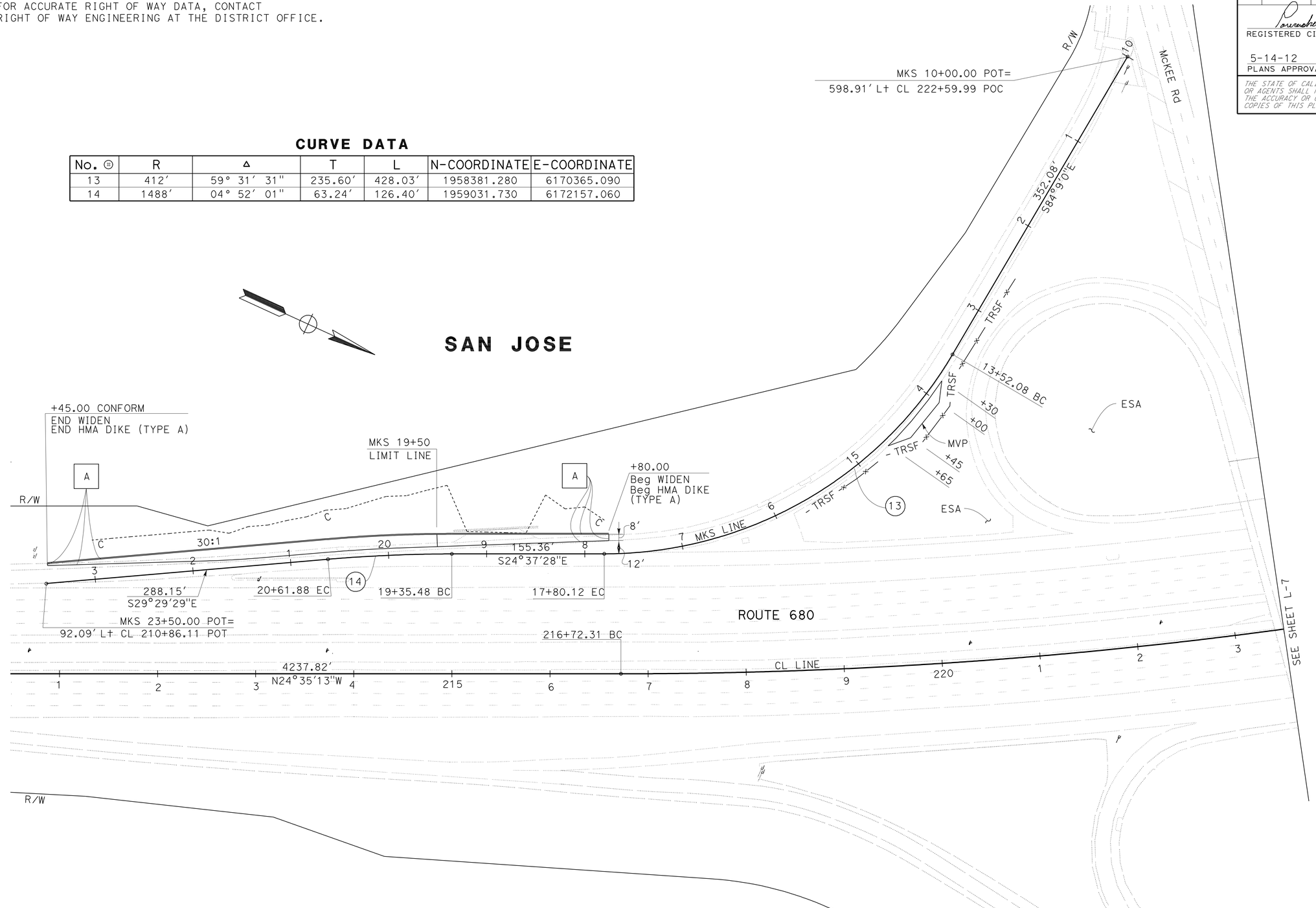

FOR NOTES, ABBREVIATIONS AND LEGEND, SEE SHEET L-1

LAYOUT

SCALE: 1" = 50′

L-6

STATE OF CALIFORNIA - DEPARTMENT OF TRANSPORTATION
DESIGN
Caltrans

FUNCTIONAL SUPERVISOR: HASSAN NIKZAD
CALCULATED-DESIGNED BY: QUYNH P. NGUYEN
CHECKED BY: ROSTAM POUROUSHASB
REVISED BY
DATE REVISED

LAST REVISION 04-27-12
DATE PLOTTED => 14-MAY-2012
TIME PLOTTED => 10:42

Dist	COUNTY	ROUTE	POST MILES TOTAL PROJECT	SHEET No.	TOTAL SHEETS
04	Ala,SCl	680	0.0/0.1, 0.1/9.9	12	319

REGISTERED CIVIL ENGINEER 2-13-12 DATE

5-14-12
PLANS APPROVAL DATE

REGISTERED PROFESSIONAL ENGINEER Rostam Pouroushasb No. 58173 Exp. 6-30-12 CIVIL STATE OF CALIFORNIA

THE STATE OF CALIFORNIA OR ITS OFFICERS OR AGENTS SHALL NOT BE RESPONSIBLE FOR THE ACCURACY OR COMPLETENESS OF SCANNED COPIES OF THIS PLAN SHEET.

NOTE:

FOR ACCURATE RIGHT OF WAY DATA, CONTACT RIGHT OF WAY ENGINEERING AT THE DISTRICT OFFICE.

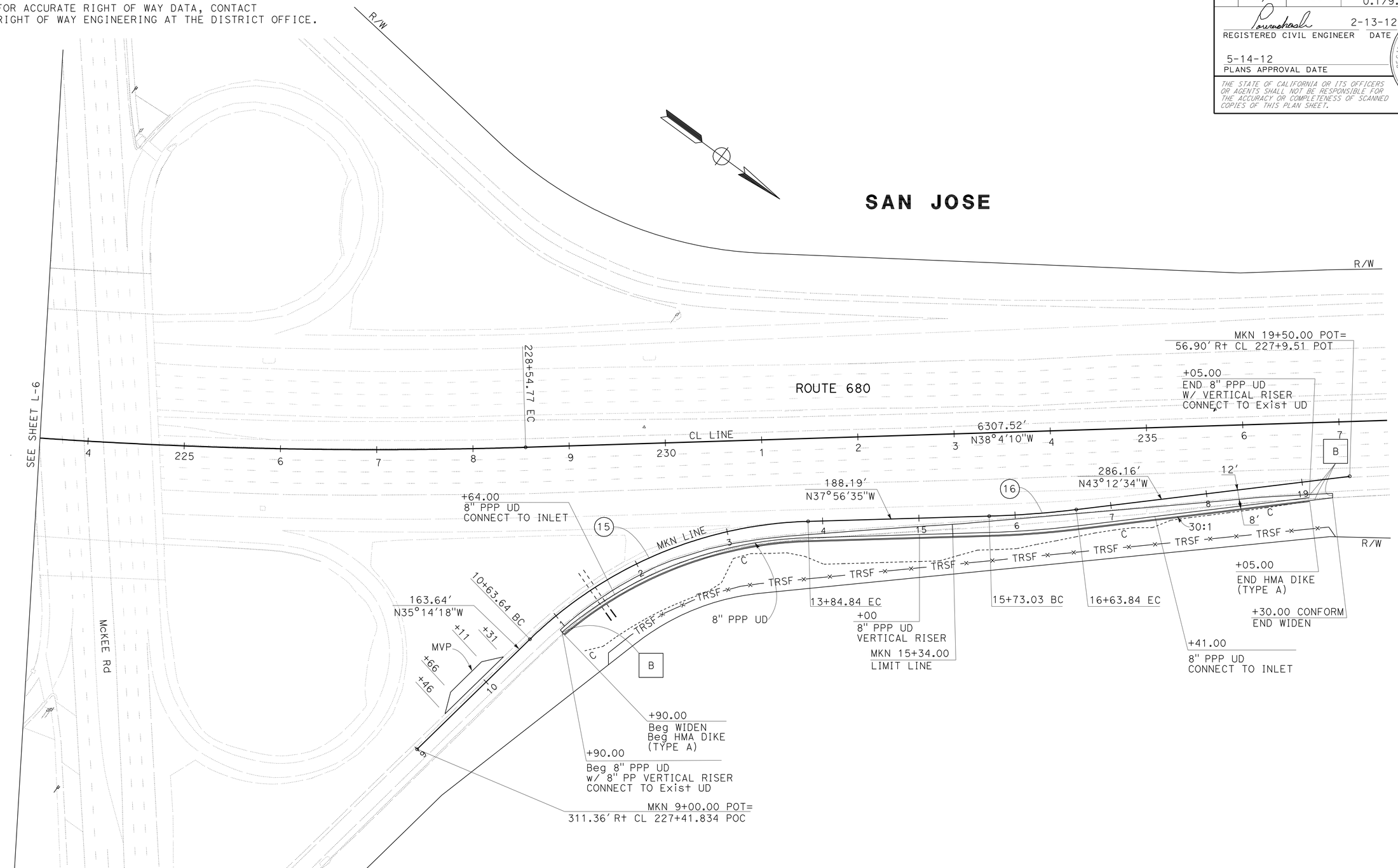

CURVE DATA

No. ⊕	R	Δ	T	L	N-COORDINATE	E-COORDINATE
15	432'	42° 36' 00"	168.43'	321.20'	1960174.726	6170459.462
16	988'	05° 15' 59"	45.44'	90.81'	1959450.010	6169223.903

FOR NOTES, ABBREVIATIONS AND LEGEND, SEE SHEET L-1

LAYOUT

SCALE: 1" = 50'

L-7

STATE OF CALIFORNIA - DEPARTMENT OF TRANSPORTATION

Caltrans DESIGN

FUNCTIONAL SUPERVISOR: HASSAN NIKZAD

CALCULATED-DESIGNED BY: QUYNH P. NGUYEN

CHECKED BY: ROSTAM POUROUSHASB

REVISED BY

DATE REVISED

LAST REVISION 01-10-12

DATE PLOTTED => 14-MAY-2012

TIME PLOTTED => 10:42

Dist	COUNTY	ROUTE	POST MILES TOTAL PROJECT	SHEET No.	TOTAL SHEETS
04	Ala,SCl	680	0.0/0.1, 0.1/9.9	13	319

REGISTERED CIVIL ENGINEER 2-13-12 DATE

5-14-12
PLANS APPROVAL DATE

REGISTERED PROFESSIONAL ENGINEER Rostam Pouroushasb No. 58173 Exp. 6-30-12 CIVIL STATE OF CALIFORNIA

THE STATE OF CALIFORNIA OR ITS OFFICERS OR AGENTS SHALL NOT BE RESPONSIBLE FOR THE ACCURACY OR COMPLETENESS OF SCANNED COPIES OF THIS PLAN SHEET.

NOTE:

FOR ACCURATE RIGHT OF WAY DATA, CONTACT RIGHT OF WAY ENGINEERING AT THE DISTRICT OFFICE.

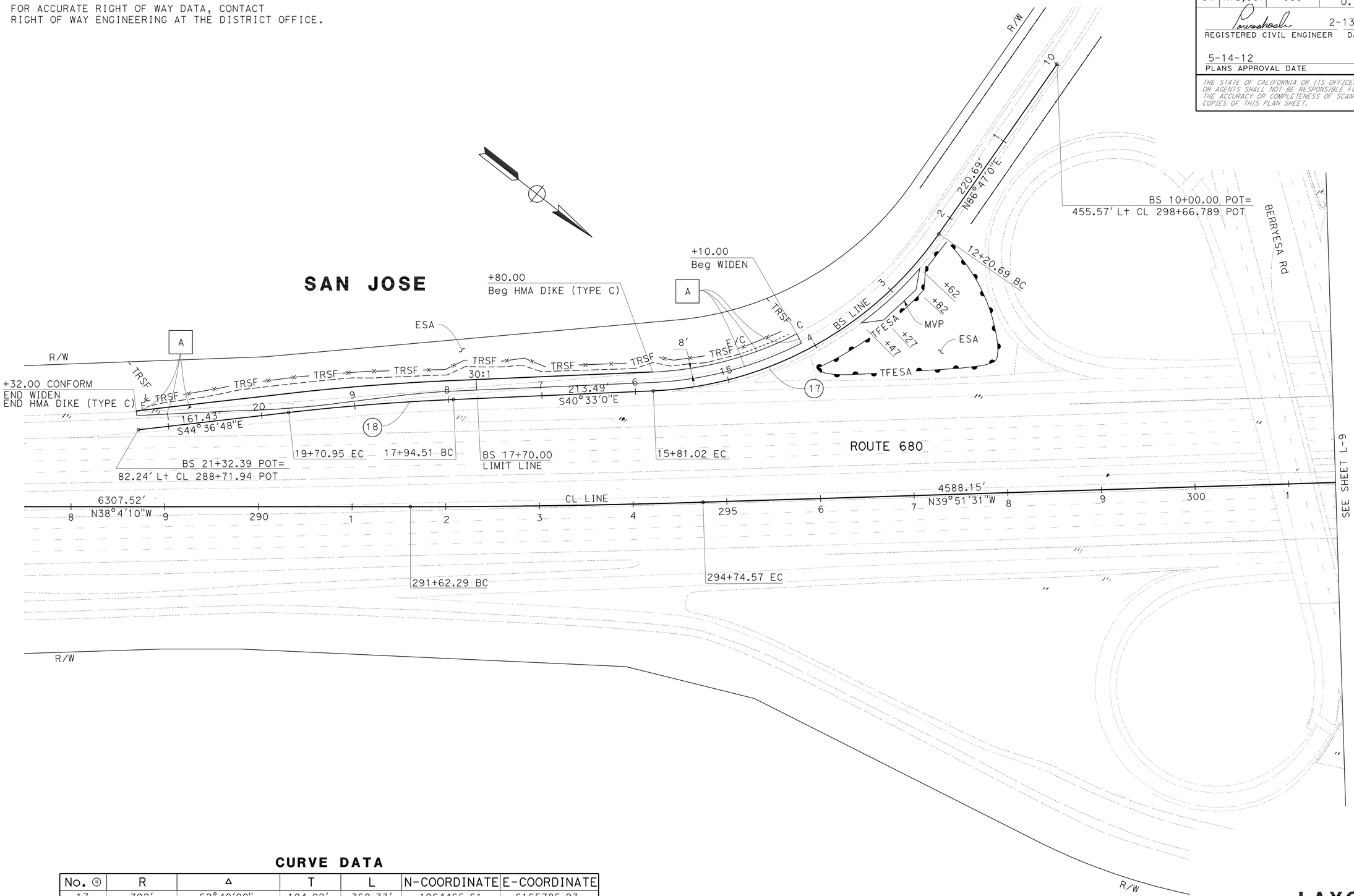

CURVE DATA

No. ⊕	R	Δ	T	L	N-COORDINATE	E-COORDINATE
17	392′	52°40′00"	194.02′	360.33′	1964465.61	6165785.93
18	2488′	4°3′48"	88.26′	176.44′	1966175.72	6168113.05

FOR NOTES, ABBREVIATIONS AND LEGEND, SEE SHEET L-1

LAYOUT

SCALE: 1" = 50′

L-8

STATE OF CALIFORNIA - DEPARTMENT OF TRANSPORTATION
Caltrans® DESIGN

FUNCTIONAL SUPERVISOR: HASSAN NIKZAD
CALCULATED-DESIGNED BY: QUYNH P. NGUYEN
CHECKED BY: ROSTAM POUROUSHASB
REVISED BY / DATE REVISED

LAST REVISION 01-27-12 | DATE PLOTTED => 14-MAY-2012 | TIME PLOTTED => 10:42

Dist	COUNTY	ROUTE	POST MILES TOTAL PROJECT	SHEET No.	TOTAL SHEETS
04	Ala,SCl	680	0.0/0.1, 0.1/9.9	14	319

REGISTERED CIVIL ENGINEER 2-13-12 DATE

5-14-12
PLANS APPROVAL DATE

REGISTERED PROFESSIONAL ENGINEER
Rostam Pouroushasb
No. 58173
Exp. 6-30-12
CIVIL
STATE OF CALIFORNIA

THE STATE OF CALIFORNIA OR ITS OFFICERS OR AGENTS SHALL NOT BE RESPONSIBLE FOR THE ACCURACY OR COMPLETENESS OF SCANNED COPIES OF THIS PLAN SHEET.

NOTE:

FOR ACCURATE RIGHT OF WAY DATA, CONTACT RIGHT OF WAY ENGINEERING AT THE DISTRICT OFFICE.

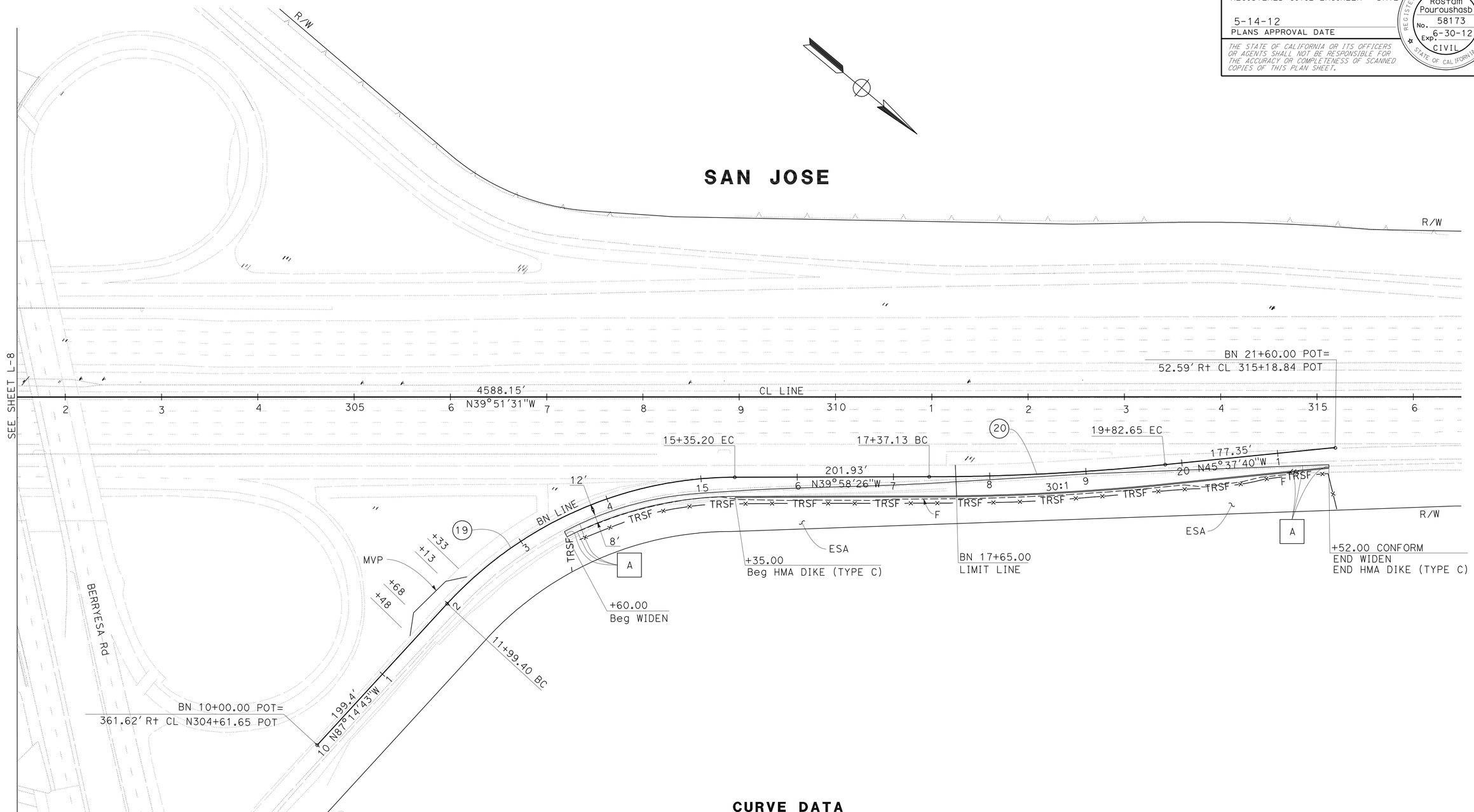

CURVE DATA

No. ⊕	R	Δ	T	L	N-COORDINATE	E-COORDINATE
19	407'	47°16'18"	178.12'	335.79'	1966241.10	6165610.02
20	2488'	5°39'15"	122.86'	245.52'	1964536.00	6163261.75

FOR NOTES, ABBREVIATIONS AND LEGEND, SEE SHEET L-1

LAYOUT

SCALE: 1" = 50'

L-9

REVISED BY	DATE REVISED

CALCULATED-DESIGNED BY	CHECKED BY
QUYNH P. NGUYEN	ROSTAM POUROUSHASB

FUNCTIONAL SUPERVISOR: HASSAN NIKZAD

STATE OF CALIFORNIA - DEPARTMENT OF TRANSPORTATION

Caltrans® DESIGN

LAST REVISION 01-27-12 | DATE PLOTTED => 14-MAY-2012 | TIME PLOTTED => 10:42

Dist	COUNTY	ROUTE	POST MILES TOTAL PROJECT	SHEET No.	TOTAL SHEETS
04	Ala,SCl	680	0.0/0.1, 0.1/9.9	15	319

REGISTERED CIVIL ENGINEER 2-13-12 DATE

5-14-12
PLANS APPROVAL DATE

REGISTERED PROFESSIONAL ENGINEER Rostam Pouroushasb No. 58173 Exp. 6-30-12 CIVIL STATE OF CALIFORNIA

THE STATE OF CALIFORNIA OR ITS OFFICERS OR AGENTS SHALL NOT BE RESPONSIBLE FOR THE ACCURACY OR COMPLETENESS OF SCANNED COPIES OF THIS PLAN SHEET.

NOTE:

FOR ACCURATE RIGHT OF WAY DATA, CONTACT RIGHT OF WAY ENGINEERING AT THE DISTRICT OFFICE.

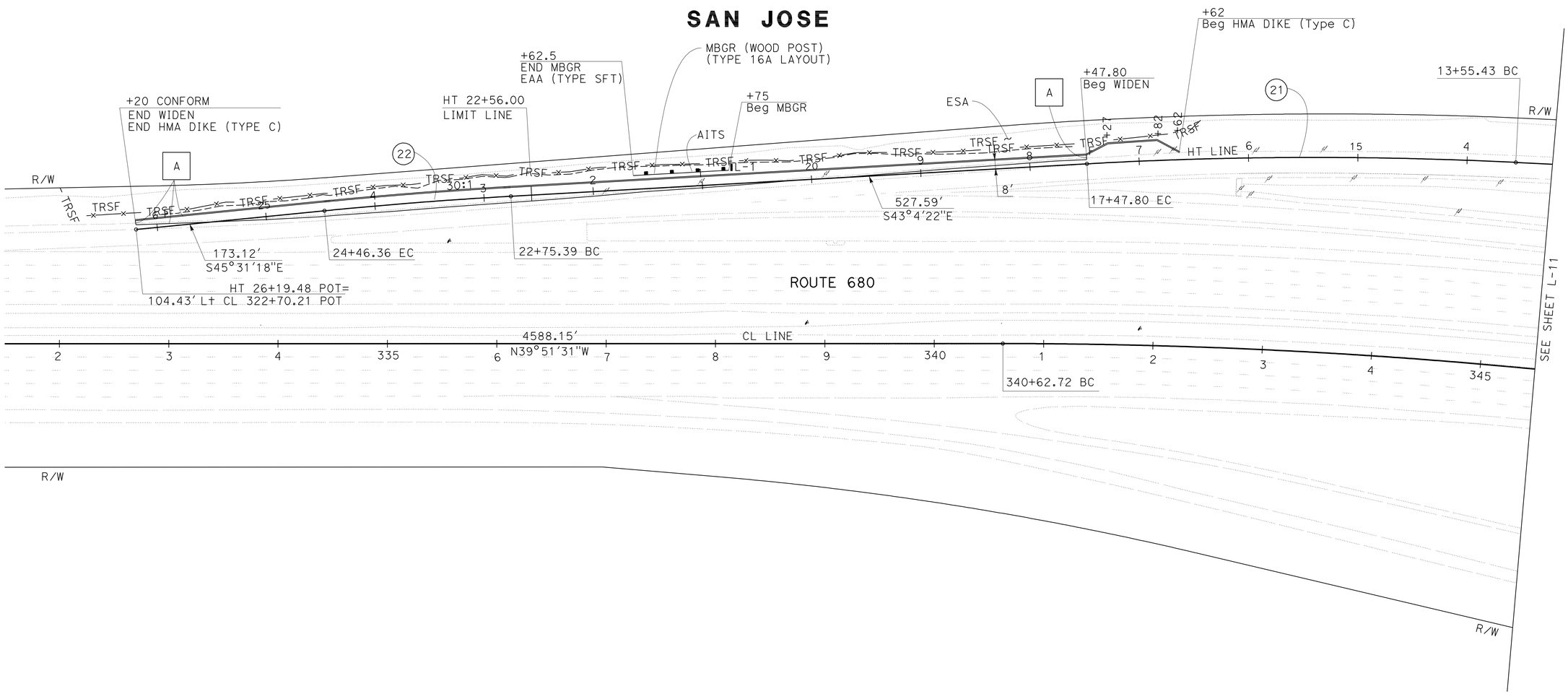

CURVE DATA

No. ⊕	R	Δ	T	L	N-COORDINATE	E-COORDINATE
21	3700'	6°4'34"	196.37'	392.37'	1970838.12	6165731.47
22	4000'	2°26'57"	85.50'	170.97'	1970657.35	6166310.66

FOR NOTES, ABBREVIATIONS AND LEGEND, SEE SHEET L-1

LAYOUT

SCALE: 1" = 50'

L-10

STATE OF CALIFORNIA - DEPARTMENT OF TRANSPORTATION
DESIGN
Caltrans

FUNCTIONAL SUPERVISOR: HASSAN NIKZAD
CALCULATED-DESIGNED BY: QUYNH P. NGUYEN
CHECKED BY: ROSTAM POUROUSHASB
REVISED BY
DATE REVISED

LAST REVISION 01-31-12
DATE PLOTTED => 14-MAY-2012
TIME PLOTTED => 10:42

Dist	COUNTY	ROUTE	POST MILES TOTAL PROJECT	SHEET No.	TOTAL SHEETS
04	Ala,SCl	680	0.0/0.1, 0.1/9.9	16	319

REGISTERED CIVIL ENGINEER 2-13-12 DATE

5-14-12
PLANS APPROVAL DATE

REGISTERED PROFESSIONAL ENGINEER
Rostam Pouroushasb
No. 58173
Exp. 6-30-12
CIVIL
STATE OF CALIFORNIA

THE STATE OF CALIFORNIA OR ITS OFFICERS OR AGENTS SHALL NOT BE RESPONSIBLE FOR THE ACCURACY OR COMPLETENESS OF SCANNED COPIES OF THIS PLAN SHEET.

NOTE:

FOR ACCURATE RIGHT OF WAY DATA, CONTACT RIGHT OF WAY ENGINEERING AT THE DISTRICT OFFICE.

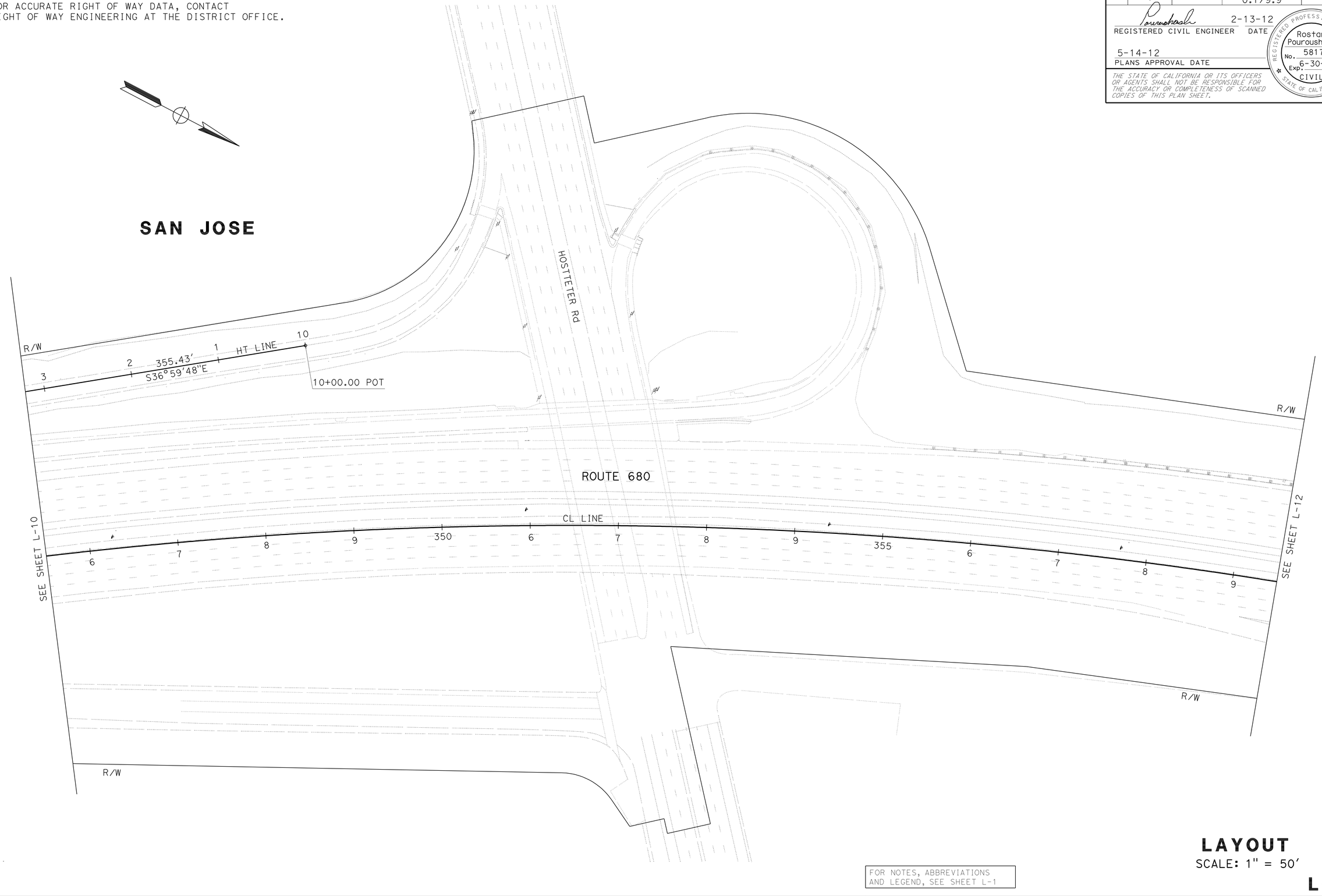

FOR NOTES, ABBREVIATIONS AND LEGEND, SEE SHEET L-1

LAYOUT

SCALE: 1" = 50'

L-11

STATE OF CALIFORNIA - DEPARTMENT OF TRANSPORTATION
Caltrans
DESIGN

FUNCTIONAL SUPERVISOR: HASSAN NIKZAD
CALCULATED-DESIGNED BY: QUYNH P. NGUYEN
CHECKED BY: ROSTAM POUROUSHASB
REVISED BY
DATE REVISED

LAST REVISION 12-12-11
DATE PLOTTED => 14-MAY-2012
TIME PLOTTED => 10:43

Dist	COUNTY	ROUTE	POST MILES TOTAL PROJECT	SHEET No.	TOTAL SHEETS
04	Ala,SCl	680	0.0/0.1, 0.1/9.9	17	319

REGISTERED CIVIL ENGINEER 2-13-12 DATE

5-14-12
PLANS APPROVAL DATE

REGISTERED PROFESSIONAL ENGINEER Rostam Pouroushasb No. 58173 Exp. 6-30-12 CIVIL STATE OF CALIFORNIA

THE STATE OF CALIFORNIA OR ITS OFFICERS OR AGENTS SHALL NOT BE RESPONSIBLE FOR THE ACCURACY OR COMPLETENESS OF SCANNED COPIES OF THIS PLAN SHEET.

NOTE:

FOR ACCURATE RIGHT OF WAY DATA, CONTACT RIGHT OF WAY ENGINEERING AT THE DISTRICT OFFICE.

CURVE DATA

No. ⓡ	R	Δ	T	L	N-COORDINATE	E-COORDINATE
23	200.00′	21°17′23″	37.59′	74.31′	1970955.561	6161492.438
24	200.00′	78°15′49″	162.72′	273.19′	1970720.262	6161838.103
25	400.00′	41°55′21″	153.23′	292.67′	1970089.163	6161738.747

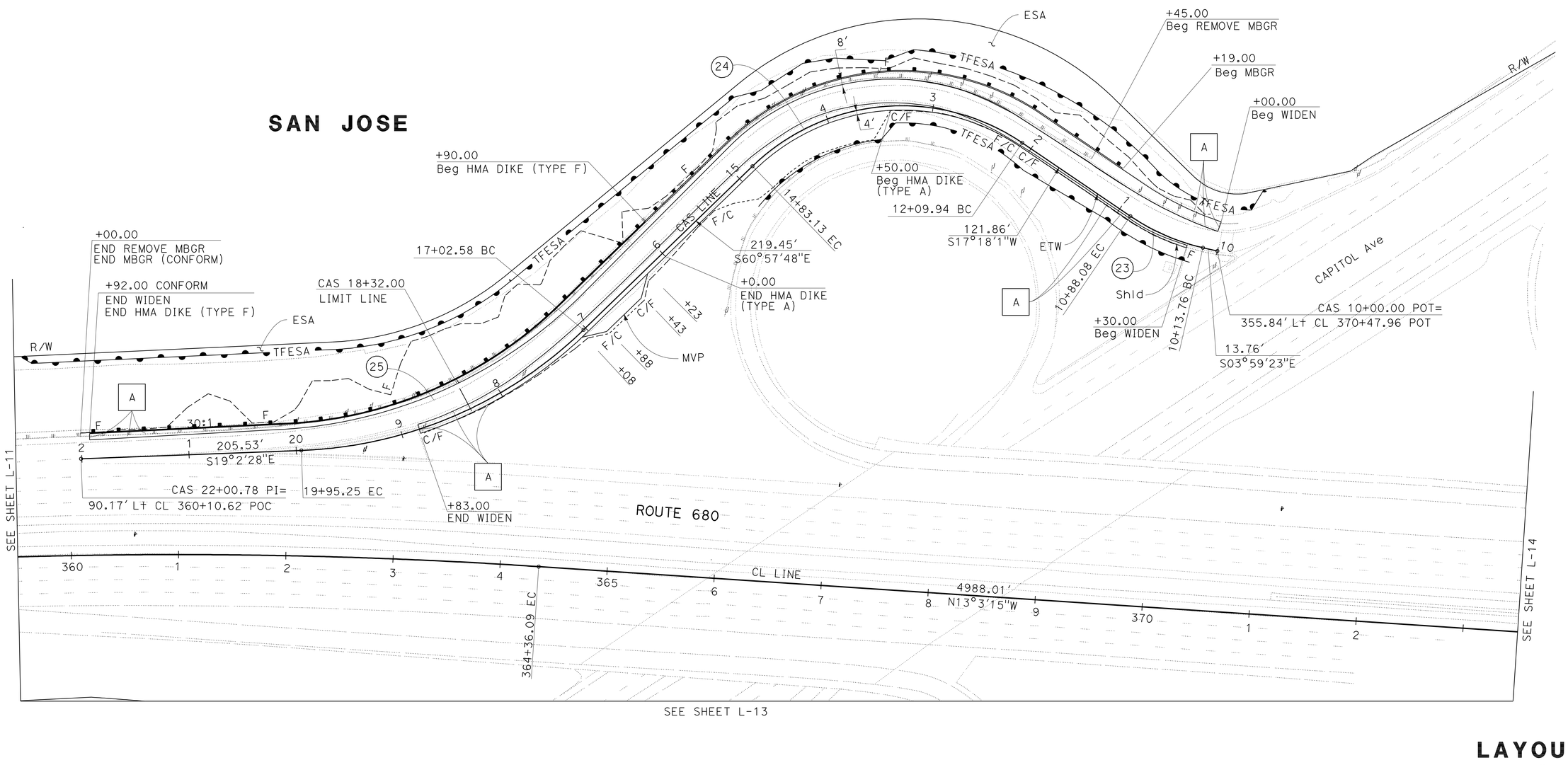

FOR NOTES, ABBREVIATIONS AND LEGEND, SEE SHEET L-1

LAYOUT

SCALE: 1" = 50′

L-12

STATE OF CALIFORNIA - DEPARTMENT OF TRANSPORTATION
Caltrans DESIGN

FUNCTIONAL SUPERVISOR: HASSAN NIKZAD
CALCULATED-DESIGNED BY: QUYNH P. NGUYEN
CHECKED BY: ROSTAM POUROUSHASB
REVISED BY / DATE REVISED

LAST REVISION 01-27-12
DATE PLOTTED => 14-MAY-2012
TIME PLOTTED => 13:23

Dist	COUNTY	ROUTE	POST MILES TOTAL PROJECT	SHEET No.	TOTAL SHEETS
04	Ala,SCl	680	0.0/0.1, 0.1/9.9	18	319

REGISTERED CIVIL ENGINEER 2-13-12 DATE

5-14-12
PLANS APPROVAL DATE

REGISTERED PROFESSIONAL ENGINEER Rostam Pouroushasb No. 58173 Exp. 6-30-12 CIVIL STATE OF CALIFORNIA

THE STATE OF CALIFORNIA OR ITS OFFICERS OR AGENTS SHALL NOT BE RESPONSIBLE FOR THE ACCURACY OR COMPLETENESS OF SCANNED COPIES OF THIS PLAN SHEET.

NOTE:

FOR ACCURATE RIGHT OF WAY DATA, CONTACT RIGHT OF WAY ENGINEERING AT THE DISTRICT OFFICE.

SAN JOSE

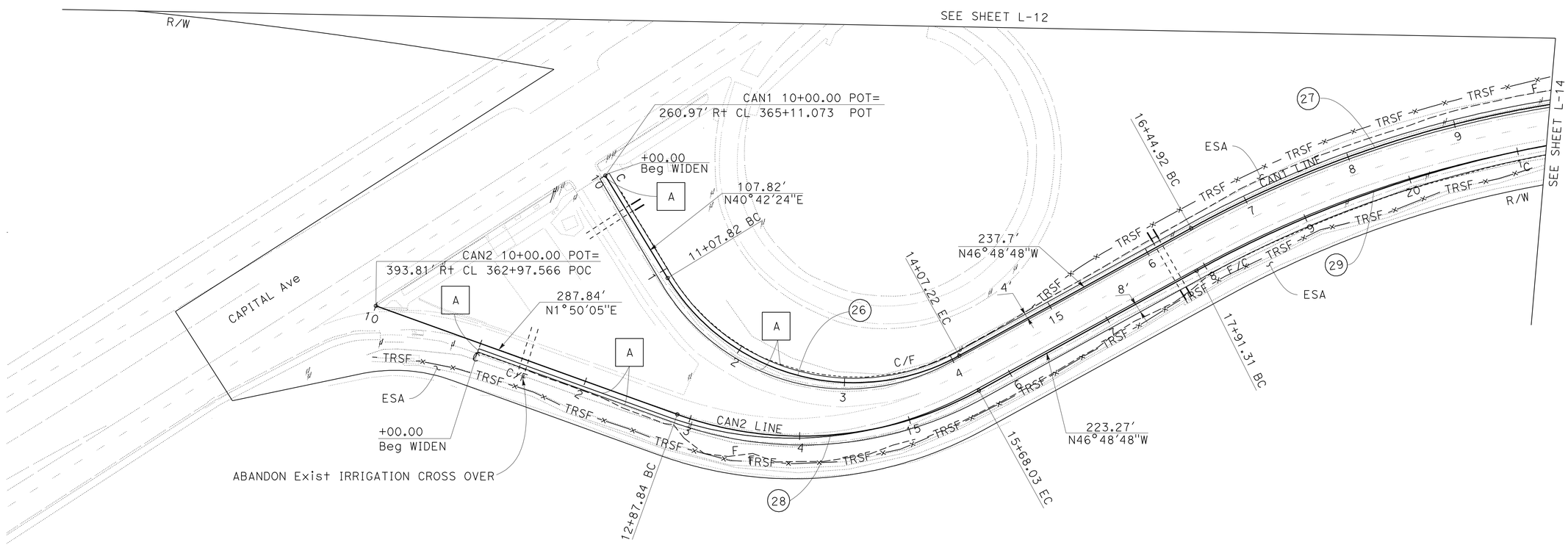

CURVE DATA

No.	R	Δ	T	L	N-COORDINATE	E-COORDINATE
26	196′	87°31′12"	187.70′	299.39′	1970804.54	6162315.396
27	1000′	29°42′44"	265.26′	518.57′	1971839.26	6162960.596
28	330′	48°38′53"	149.17′	280.19′	1970733.33	6162248.067
29	1050′	11°38′56"	107.11′	213.48′	1971892.33	6163029.712

FOR NOTES, ABBREVIATIONS AND LEGEND, SEE SHEET L-1

LAYOUT

SCALE: 1" = 50′

L-13

STATE OF CALIFORNIA - DEPARTMENT OF TRANSPORTATION

DESIGN

FUNCTIONAL SUPERVISOR: HASSAN NIKZAD

CALCULATED-DESIGNED BY: QUYNH P. NGUYEN

CHECKED BY: ROSTAM POUROUSHASB

REVISED BY / DATE REVISED

LAST REVISION 04-27-12

DATE PLOTTED => 14-MAY-2012
TIME PLOTTED => 10:43

Dist	COUNTY	ROUTE	POST MILES TOTAL PROJECT	SHEET No.	TOTAL SHEETS
04	Ala,SCl	680	0.0/0.1, 0.1/9.9	19	319

REGISTERED CIVIL ENGINEER 2-13-12 DATE

5-14-12
PLANS APPROVAL DATE

REGISTERED PROFESSIONAL ENGINEER Rostam Pouroushasb No. 58173 Exp. 6-30-12 CIVIL STATE OF CALIFORNIA

THE STATE OF CALIFORNIA OR ITS OFFICERS OR AGENTS SHALL NOT BE RESPONSIBLE FOR THE ACCURACY OR COMPLETENESS OF SCANNED COPIES OF THIS PLAN SHEET.

NOTE:

FOR ACCURATE RIGHT OF WAY DATA, CONTACT RIGHT OF WAY ENGINEERING AT THE DISTRICT OFFICE.

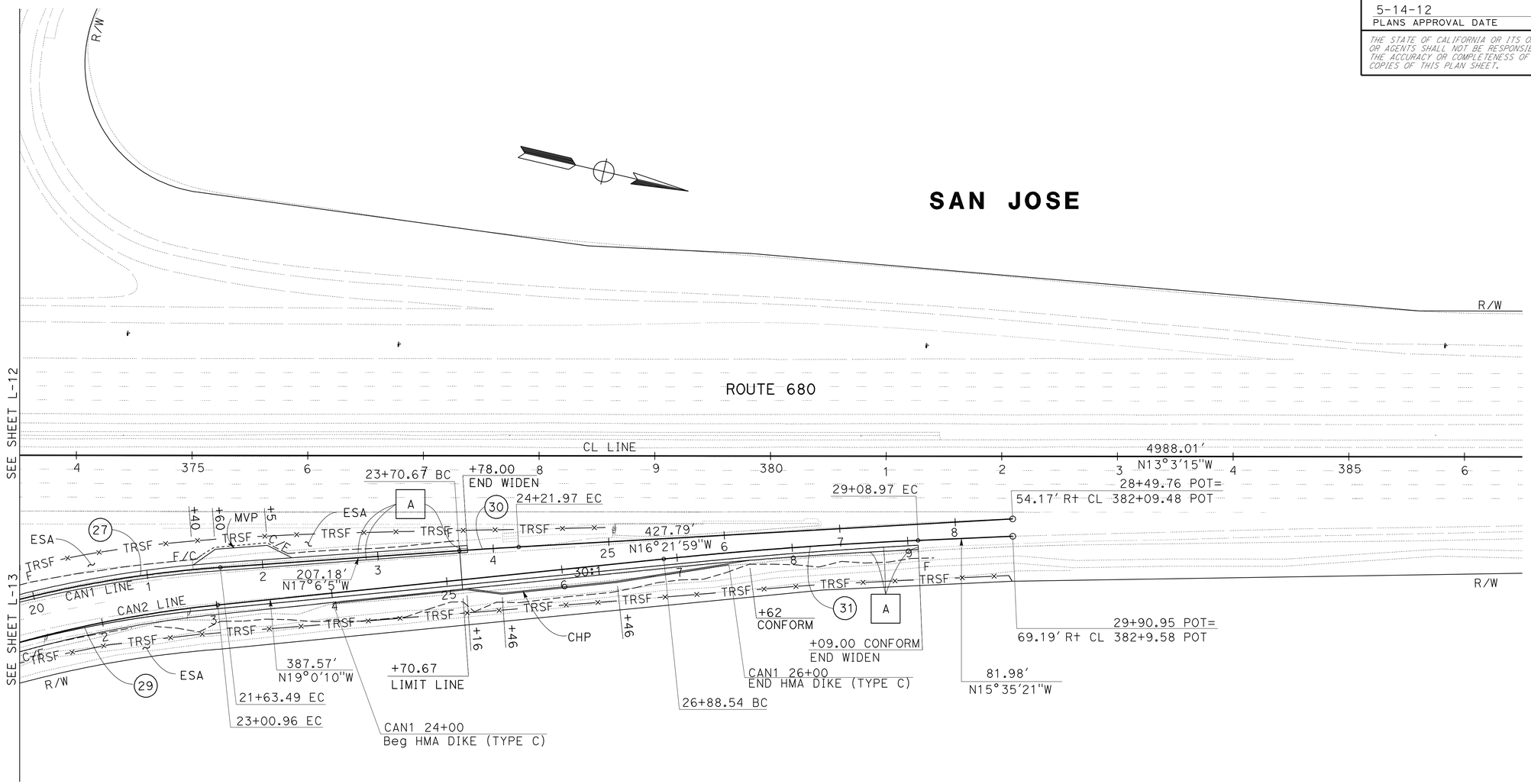

CURVE DATA

No. ⊕	R	Δ	T	L	N-COORDINATE	E-COORDINATE
27	1000'	29°42'44"	265.26'	518.57'	1971839.26	6162960.596
30	4001'	0°44'05"	25.65'	51.30'	1972919.62	6165767.582
29	1050'	27°48'38"	259.95'	509.66'	1971892.33	6163029.712
31	3700'	3°24'49"	110.25'	220.44'	1973121.66	6165409.097

FOR NOTES, ABBREVIATIONS AND LEGEND, SEE SHEET L-1

LAYOUT

SCALE: 1" = 50'

L-14

STATE OF CALIFORNIA - DEPARTMENT OF TRANSPORTATION

Caltrans DESIGN

FUNCTIONAL SUPERVISOR: HASSAN NIKZAD

CALCULATED-DESIGNED BY: QUYNH P. NGUYEN

CHECKED BY: ROSTAM POUROUSHASB

REVISED BY

DATE REVISED

LAST REVISION 04-27-12

DATE PLOTTED => 15-MAY-2012

TIME PLOTTED => 11:05

Dist	COUNTY	ROUTE	POST MILES TOTAL PROJECT	SHEET No.	TOTAL SHEETS
04	Ala,SCl	680	0.0/0.1, 0.1/9.9	20	319

REGISTERED CIVIL ENGINEER 2-13-12 DATE

5-14-12
PLANS APPROVAL DATE

REGISTERED PROFESSIONAL ENGINEER Rostam Pouroushasb No. 58173 Exp. 6-30-12 CIVIL STATE OF CALIFORNIA

THE STATE OF CALIFORNIA OR ITS OFFICERS OR AGENTS SHALL NOT BE RESPONSIBLE FOR THE ACCURACY OR COMPLETENESS OF SCANNED COPIES OF THIS PLAN SHEET.

NOTE:

FOR ACCURATE RIGHT OF WAY DATA, CONTACT RIGHT OF WAY ENGINEERING AT THE DISTRICT OFFICE.

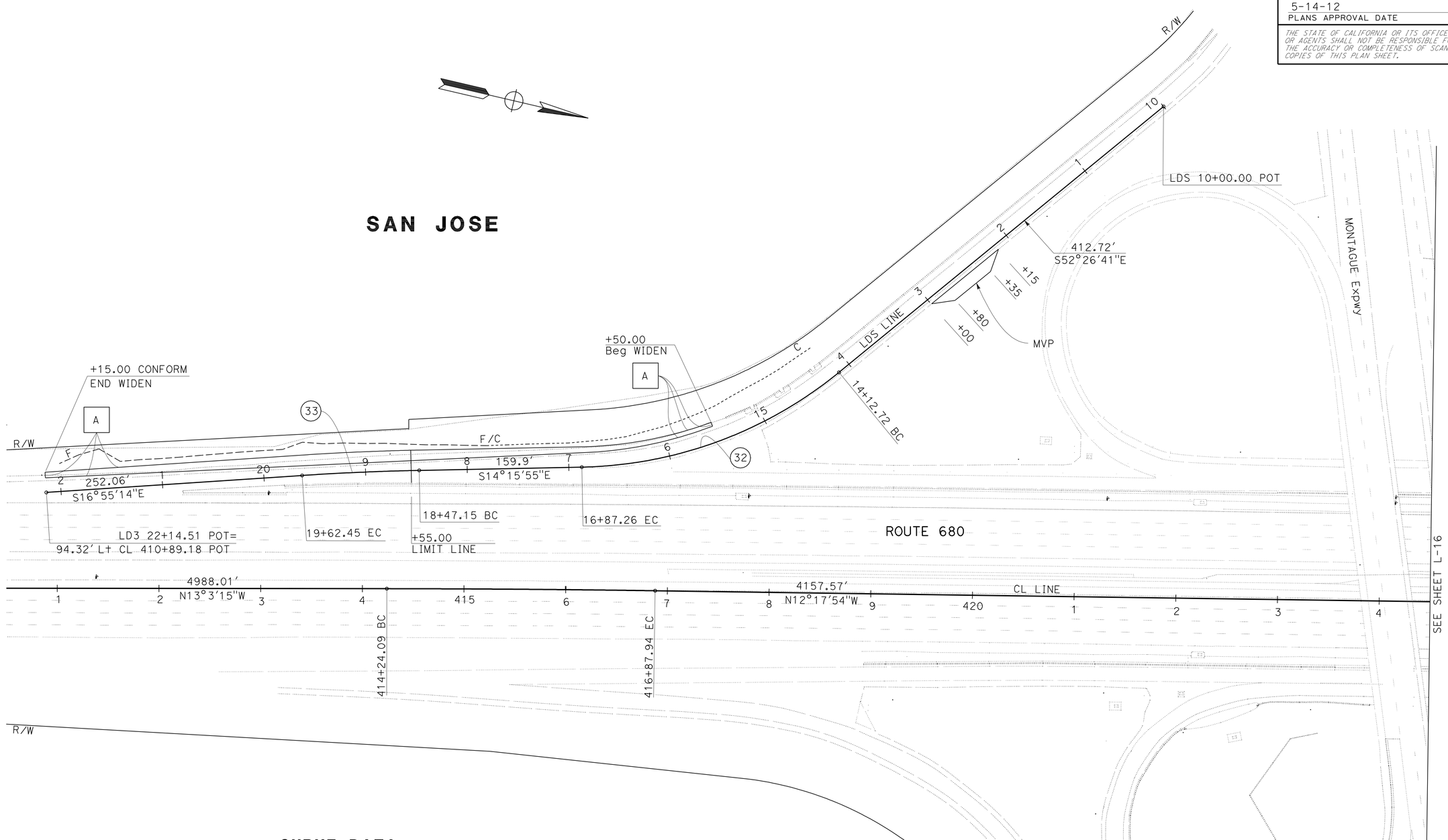

CURVE DATA

No. ⊕	R	Δ	T	L	N-COORDINATE	E-COORDINATE
32	412'	38° 10' 46"	142.59'	274.54'	1975380.180	6160470.420
33	2488'	02° 39' 19"	57.66'	115.30'	1975939.800	6163320.390

FOR NOTES, ABBREVIATIONS AND LEGEND, SEE SHEET L-1

LAYOUT

SCALE: 1" = 50'

L-15

STATE OF CALIFORNIA - DEPARTMENT OF TRANSPORTATION
DESIGN
Caltrans

FUNCTIONAL SUPERVISOR: HASSAN NIKZAD
CALCULATED-DESIGNED BY: QUYNH P. NGUYEN
CHECKED BY: ROSTAM POUROUSHASB
REVISED BY
DATE REVISED

LAST REVISION 01-09-12
DATE PLOTTED => 14-MAY-2012
TIME PLOTTED => 10:43

NOTE:

FOR ACCURATE RIGHT OF WAY DATA, CONTACT RIGHT OF WAY ENGINEERING AT THE DISTRICT OFFICE.

Dist	COUNTY	ROUTE	POST MILES TOTAL PROJECT	SHEET No.	TOTAL SHEETS
04	Ala,SCl	680	0.0/0.1, 0.1/9.9	21	319

REGISTERED CIVIL ENGINEER 2-13-12 DATE

5-14-12
PLANS APPROVAL DATE

REGISTERED PROFESSIONAL ENGINEER Rostam Pouroushasb No. 58173 Exp. 6-30-12 CIVIL STATE OF CALIFORNIA

THE STATE OF CALIFORNIA OR ITS OFFICERS OR AGENTS SHALL NOT BE RESPONSIBLE FOR THE ACCURACY OR COMPLETENESS OF SCANNED COPIES OF THIS PLAN SHEET.

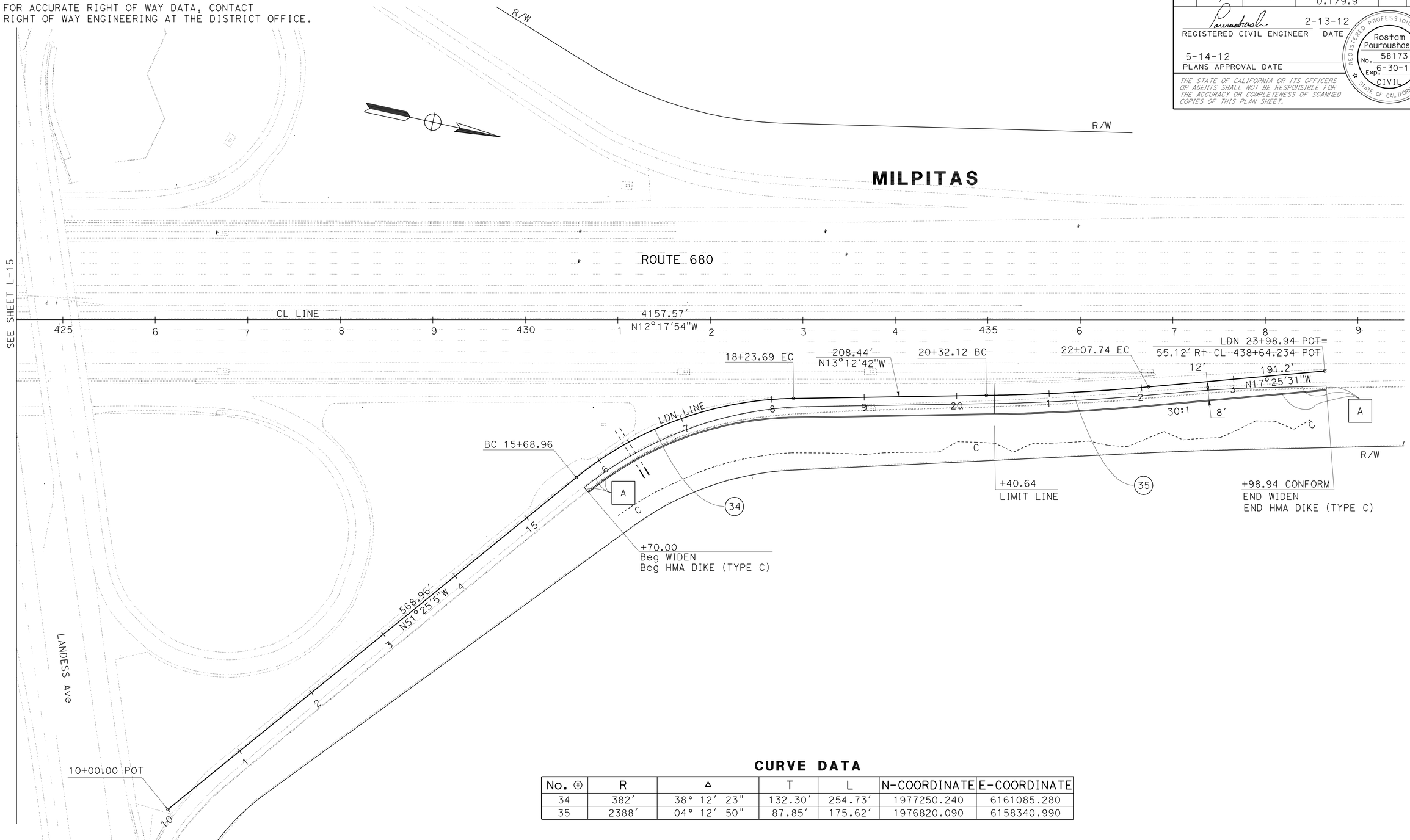

CURVE DATA

No. ⊕	R	Δ	T	L	N-COORDINATE	E-COORDINATE
34	382'	38° 12' 23"	132.30'	254.73'	1977250.240	6161085.280
35	2388'	04° 12' 50"	87.85'	175.62'	1976820.090	6158340.990

FOR NOTES, ABBREVIATIONS AND LEGEND, SEE SHEET L-1

LAYOUT

SCALE: 1" = 50'

L-16

STATE OF CALIFORNIA - DEPARTMENT OF TRANSPORTATION
DESIGN
Caltrans

FUNCTIONAL SUPERVISOR: HASSAN NIKZAD
CALCULATED-DESIGNED BY: QUYNH P. NGUYEN
CHECKED BY: ROSTAM POUROUSHASB
REVISED BY
DATE REVISED

LAST REVISION 01-31-12
DATE PLOTTED => 14-MAY-2012
TIME PLOTTED => 10:29

Dist	COUNTY	ROUTE	POST MILES TOTAL PROJECT	SHEET No.	TOTAL SHEETS
04	Ala,SCl	680	0.0/0.1, 0.1/9.9	22	319

REGISTERED CIVIL ENGINEER 2-13-12 DATE

5-14-12
PLANS APPROVAL DATE

REGISTERED PROFESSIONAL ENGINEER
Rostam Pouroushasb
No. 58173
Exp. 6-30-12
CIVIL
STATE OF CALIFORNIA

THE STATE OF CALIFORNIA OR ITS OFFICERS OR AGENTS SHALL NOT BE RESPONSIBLE FOR THE ACCURACY OR COMPLETENESS OF SCANNED COPIES OF THIS PLAN SHEET.

NOTE:

FOR ACCURATE RIGHT OF WAY DATA, CONTACT RIGHT OF WAY ENGINEERING AT THE DISTRICT OFFICE.

FOR NOTES, ABBREVIATIONS AND LEGEND, SEE SHEET L-1

LAYOUT

SCALE: 1" = 50'

L-17

STATE OF CALIFORNIA - DEPARTMENT OF TRANSPORTATION
Caltrans® DESIGN

FUNCTIONAL SUPERVISOR: HASSAN NIKZAD
CALCULATED-DESIGNED BY: QUYNH P. NGUYEN
CHECKED BY: ROSTAM POUROUSHASB
REVISED BY
DATE REVISED

LAST REVISION 01-09-12
DATE PLOTTED => 14-MAY-2012
TIME PLOTTED => 10:30

Dist	COUNTY	ROUTE	POST MILES TOTAL PROJECT	SHEET No.	TOTAL SHEETS
04	Ala,SCl	680	0.0/0.1, 0.1/9.9	23	319

REGISTERED CIVIL ENGINEER 2-13-12 DATE

5-14-12
PLANS APPROVAL DATE

REGISTERED PROFESSIONAL ENGINEER Rostam Pouroushasb No. 58173 Exp. 6-30-12 CIVIL STATE OF CALIFORNIA

THE STATE OF CALIFORNIA OR ITS OFFICERS OR AGENTS SHALL NOT BE RESPONSIBLE FOR THE ACCURACY OR COMPLETENESS OF SCANNED COPIES OF THIS PLAN SHEET.

NOTE:

FOR ACCURATE RIGHT OF WAY DATA, CONTACT RIGHT OF WAY ENGINEERING AT THE DISTRICT OFFICE.

CURVE DATA

No. ⊕	R	Δ	T	L	N-COORDINATE	E-COORDINATE
36	502′	28° 21′ 15"	126.81′	248.43′	1982727.990	6158201.490
37	2512′	05° 28′ 38"	120.16′	240.13′	1981191.890	6156735.470
38	688′	04° 45′ 36"	28.60′	57.16′	1982355.620	6159716.600

MILPITAS

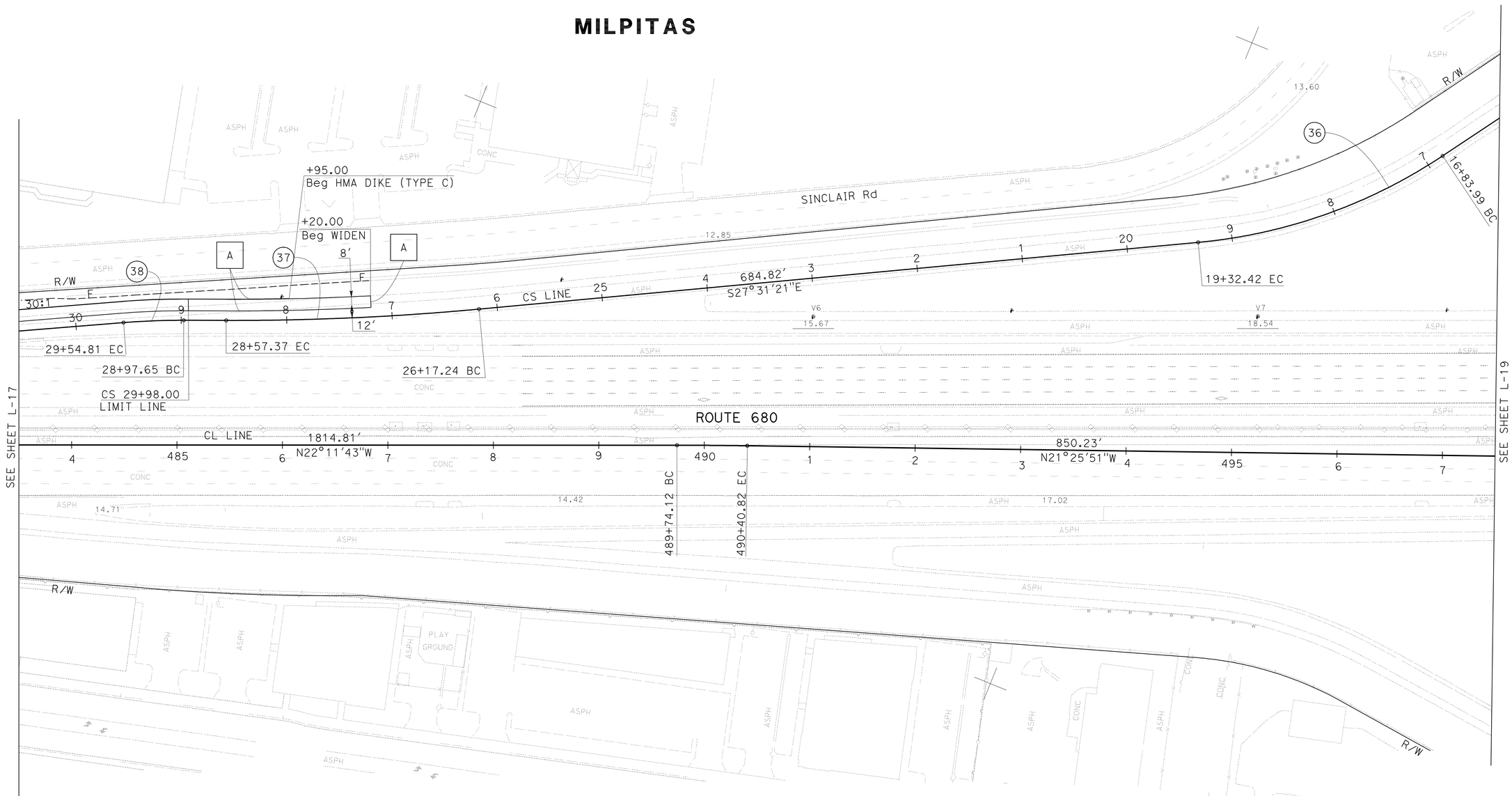

FOR NOTES, ABBREVIATIONS AND LEGEND, SEE SHEET L-1

LAYOUT

SCALE: 1" = 50′

L-18

STATE OF CALIFORNIA - DEPARTMENT OF TRANSPORTATION
DESIGN
Caltrans

FUNCTIONAL SUPERVISOR: HASSAN NIKZAD
CALCULATED-DESIGNED BY: QUYNH P. NGUYEN
CHECKED BY: ROSTAM POUROUSHASB
REVISED BY
DATE REVISED

LAST REVISION 01-27-12
DATE PLOTTED => 14-MAY-2012
TIME PLOTTED => 10:30

Dist	COUNTY	ROUTE	POST MILES TOTAL PROJECT	SHEET No.	TOTAL SHEETS
04	Ala,SCl	680	0.0/0.1, 0.1/9.9	24	319

REGISTERED CIVIL ENGINEER 2-13-12 DATE

5-14-12
PLANS APPROVAL DATE

REGISTERED PROFESSIONAL ENGINEER Rostam Pouroushasb No. 58173 Exp. 6-30-12 CIVIL STATE OF CALIFORNIA

THE STATE OF CALIFORNIA OR ITS OFFICERS OR AGENTS SHALL NOT BE RESPONSIBLE FOR THE ACCURACY OR COMPLETENESS OF SCANNED COPIES OF THIS PLAN SHEET.

NOTE:

FOR ACCURATE RIGHT OF WAY DATA, CONTACT RIGHT OF WAY ENGINEERING AT THE DISTRICT OFFICE.

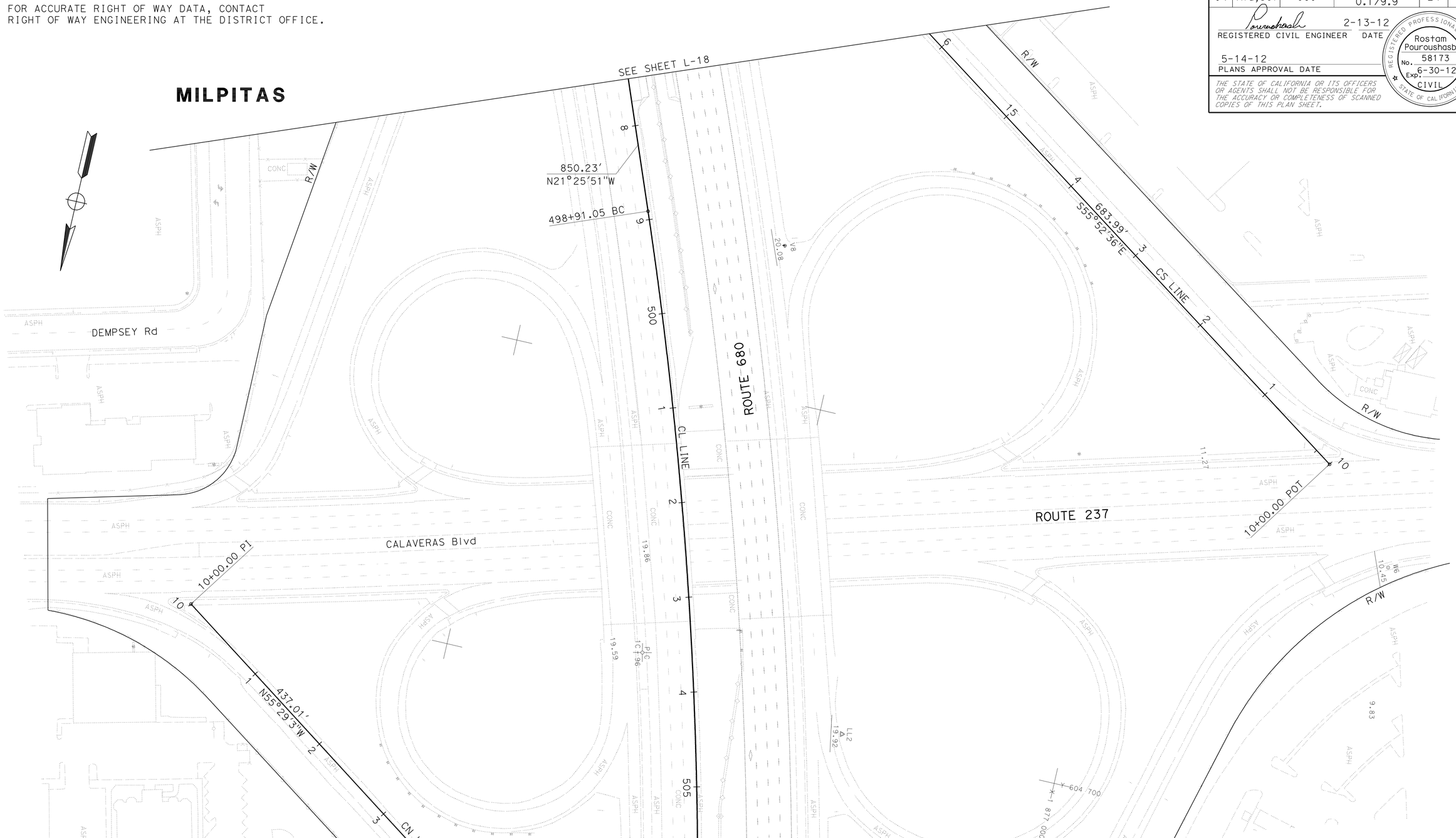

FOR NOTES, ABBREVIATIONS AND LEGEND, SEE SHEET L-1

LAYOUT

SCALE: 1" = 50'

L-19

STATE OF CALIFORNIA - DEPARTMENT OF TRANSPORTATION

Caltrans DESIGN

FUNCTIONAL SUPERVISOR: HASSAN NIKZAD

CALCULATED-DESIGNED BY: QUYNH P. NGUYEN

CHECKED BY: ROSTAM POUROUSHASB

REVISED BY | DATE REVISED

LAST REVISION 01-27-12 | DATE PLOTTED => 14-MAY-2012 | TIME PLOTTED => 10:30

Dist	COUNTY	ROUTE	POST MILES TOTAL PROJECT	SHEET No.	TOTAL SHEETS
04	Ala,SCl	680	0.0/0.1, 0.1/9.9	25	319

REGISTERED CIVIL ENGINEER 2-13-12 DATE

5-14-12
PLANS APPROVAL DATE

REGISTERED PROFESSIONAL ENGINEER Rostam Pouroushasb No. 58173 Exp. 6-30-12 CIVIL STATE OF CALIFORNIA

THE STATE OF CALIFORNIA OR ITS OFFICERS OR AGENTS SHALL NOT BE RESPONSIBLE FOR THE ACCURACY OR COMPLETENESS OF SCANNED COPIES OF THIS PLAN SHEET.

NOTE:

FOR ACCURATE RIGHT OF WAY DATA, CONTACT RIGHT OF WAY ENGINEERING AT THE DISTRICT OFFICE.

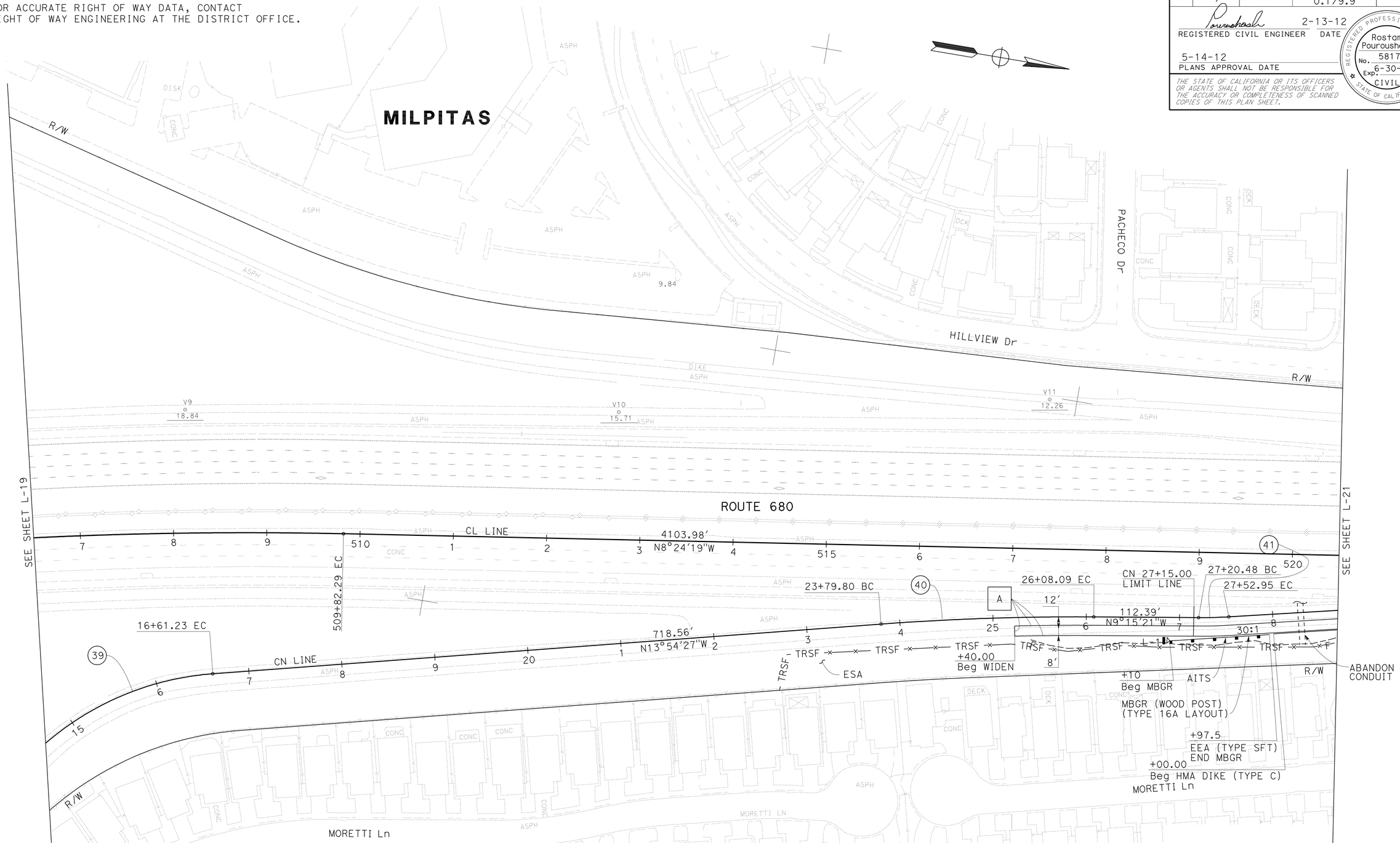

CURVE DATA

No.	R	Δ	T	L	N-COORDINATE	E-COORDINATE
39	309'	41° 34' 37"	117.31'	224.23'	1984441.950	6158867.450
40	2812'	04° 39' 05"	114.21'	228.29'	1985741.050	6161124.370
41	488'	03° 48' 46"	16.24'	32.47'	1985321.190	6157849.270

FOR NOTES, ABBREVIATIONS AND LEGEND, SEE SHEET L-1

LAYOUT

SCALE: 1" = 50'

L-20

STATE OF CALIFORNIA - DEPARTMENT OF TRANSPORTATION
Caltrans DESIGN

FUNCTIONAL SUPERVISOR: HASSAN NIKZAD
CALCULATED-DESIGNED BY: QUYNH P. NGUYEN
CHECKED BY: ROSTAM POUROUSHASB
REVISED BY
DATE REVISED

LAST REVISION 04-27-12
DATE PLOTTED => 14-MAY-2012
TIME PLOTTED => 10:30

NOTE:

FOR ACCURATE RIGHT OF WAY DATA, CONTACT
RIGHT OF WAY ENGINEERING AT THE DISTRICT OFFICE.

Dist	COUNTY	ROUTE	POST MILES TOTAL PROJECT	SHEET No.	TOTAL SHEETS
04	Ala,SCl	680	0.0/0.1, 0.1/9.9	26	319

REGISTERED CIVIL ENGINEER 2-13-12 DATE

5-14-12
PLANS APPROVAL DATE

REGISTERED PROFESSIONAL ENGINEER
Rostam Pouroushasb
No. 58173
Exp. 6-30-12
CIVIL
STATE OF CALIFORNIA

THE STATE OF CALIFORNIA OR ITS OFFICERS OR AGENTS SHALL NOT BE RESPONSIBLE FOR THE ACCURACY OR COMPLETENESS OF SCANNED COPIES OF THIS PLAN SHEET.

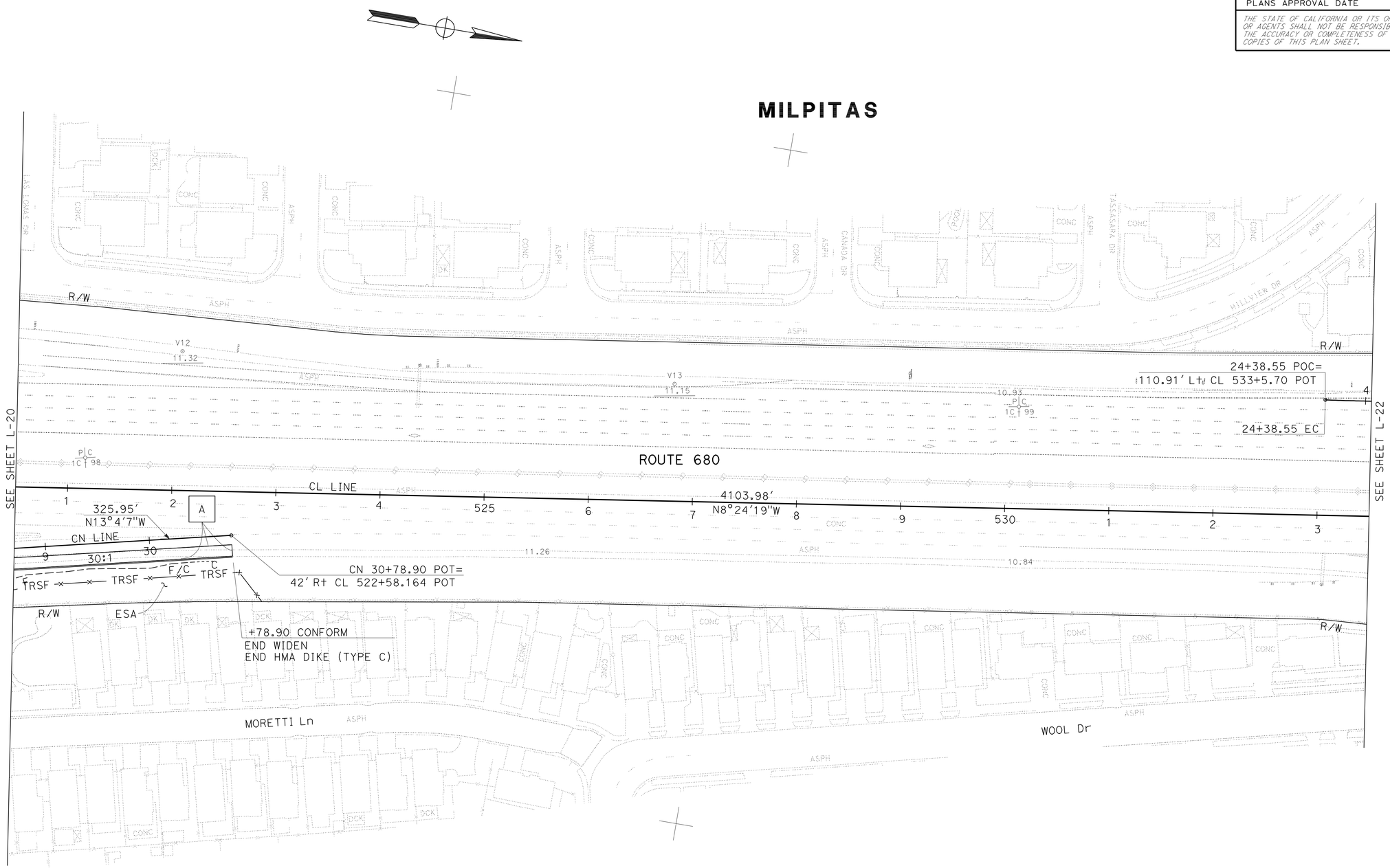

FOR NOTES, ABBREVIATIONS AND LEGEND, SEE SHEET L-1

LAYOUT

SCALE: 1" = 50'

L-21

STATE OF CALIFORNIA - DEPARTMENT OF TRANSPORTATION
Caltrans
DESIGN

FUNCTIONAL SUPERVISOR: HASSAN NIKZAD

CALCULATED-DESIGNED BY: QUYNH P. NGUYEN
CHECKED BY: ROSTAM POUROUSHASB

REVISED BY
DATE REVISED

LAST REVISION 04-27-12
DATE PLOTTED => 14-MAY-2012
TIME PLOTTED => 10:30

NOTE:

FOR ACCURATE RIGHT OF WAY DATA, CONTACT
RIGHT OF WAY ENGINEERING AT THE DISTRICT OFFICE.

Dist	COUNTY	ROUTE	POST MILES TOTAL PROJECT	SHEET No.	TOTAL SHEETS
04	Ala,SCl	680	0.0/0.1, 0.1/9.9	27	319

REGISTERED CIVIL ENGINEER 2-13-12 DATE

5-14-12
PLANS APPROVAL DATE

REGISTERED PROFESSIONAL ENGINEER Rostam Pouroushasb No. 58173 Exp. 6-30-12 CIVIL STATE OF CALIFORNIA

THE STATE OF CALIFORNIA OR ITS OFFICERS OR AGENTS SHALL NOT BE RESPONSIBLE FOR THE ACCURACY OR COMPLETENESS OF SCANNED COPIES OF THIS PLAN SHEET.

MILPITAS

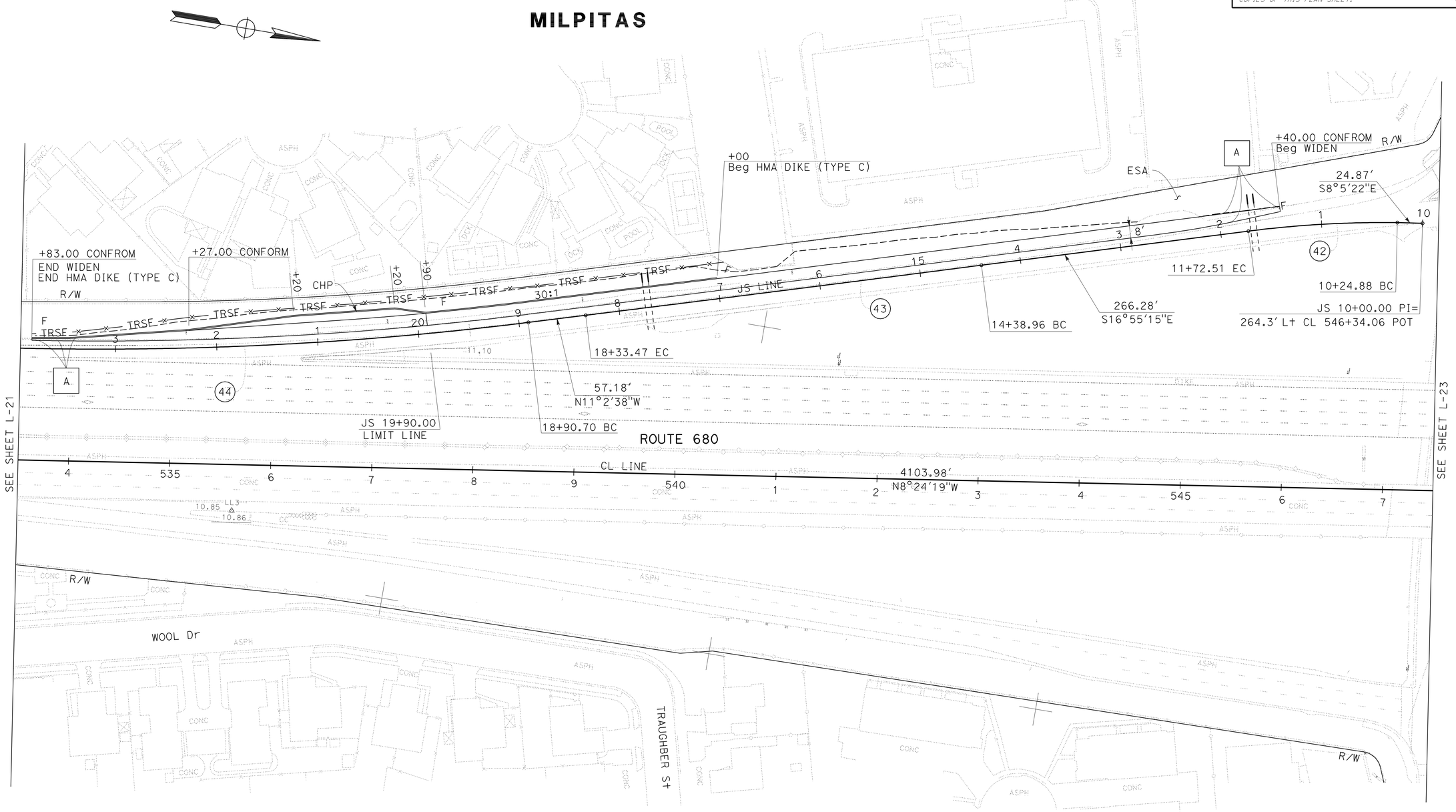

CURVE DATA

No. Ⓡ	R		T	L	N-COORDINATE	E-COORDINATE
42	1064'	07° 57' 14"	73.98'	147.73'	1988294.350	6158640.740
43	75623'	00° 17' 56"	197.30'	394.60'	1965598.290	6085387.740
44	3415'	09° 11' 34"	274.55'	547.91'	1986312.110	6454561.390

FOR NOTES, ABBREVIATIONS AND LEGEND, SEE SHEET L-1

LAYOUT

SCALE: 1" = 50'

L-22

STATE OF CALIFORNIA - DEPARTMENT OF TRANSPORTATION
Caltrans DESIGN

FUNCTIONAL SUPERVISOR: HASSAN NIKZAD
CALCULATED-DESIGNED BY: QUYNH P. NGUYEN
CHECKED BY: ROSTAM POUROUSHASB
REVISED BY
DATE REVISED

LAST REVISION 04-27-12 | DATE PLOTTED => 14-MAY-2012 | TIME PLOTTED => 10:30

Dist	COUNTY	ROUTE	POST MILES TOTAL PROJECT	SHEET No.	TOTAL SHEETS
04	Ala,SCl	680	0.0/0.1, 0.1/9.9	28	319

REGISTERED CIVIL ENGINEER 2-13-12 DATE

5-14-12
PLANS APPROVAL DATE

REGISTERED PROFESSIONAL ENGINEER Rostam Pouroushasb No. 58173 Exp. 6-30-12 CIVIL STATE OF CALIFORNIA

THE STATE OF CALIFORNIA OR ITS OFFICERS OR AGENTS SHALL NOT BE RESPONSIBLE FOR THE ACCURACY OR COMPLETENESS OF SCANNED COPIES OF THIS PLAN SHEET.

NOTE:

FOR ACCURATE RIGHT OF WAY DATA, CONTACT RIGHT OF WAY ENGINEERING AT THE DISTRICT OFFICE.

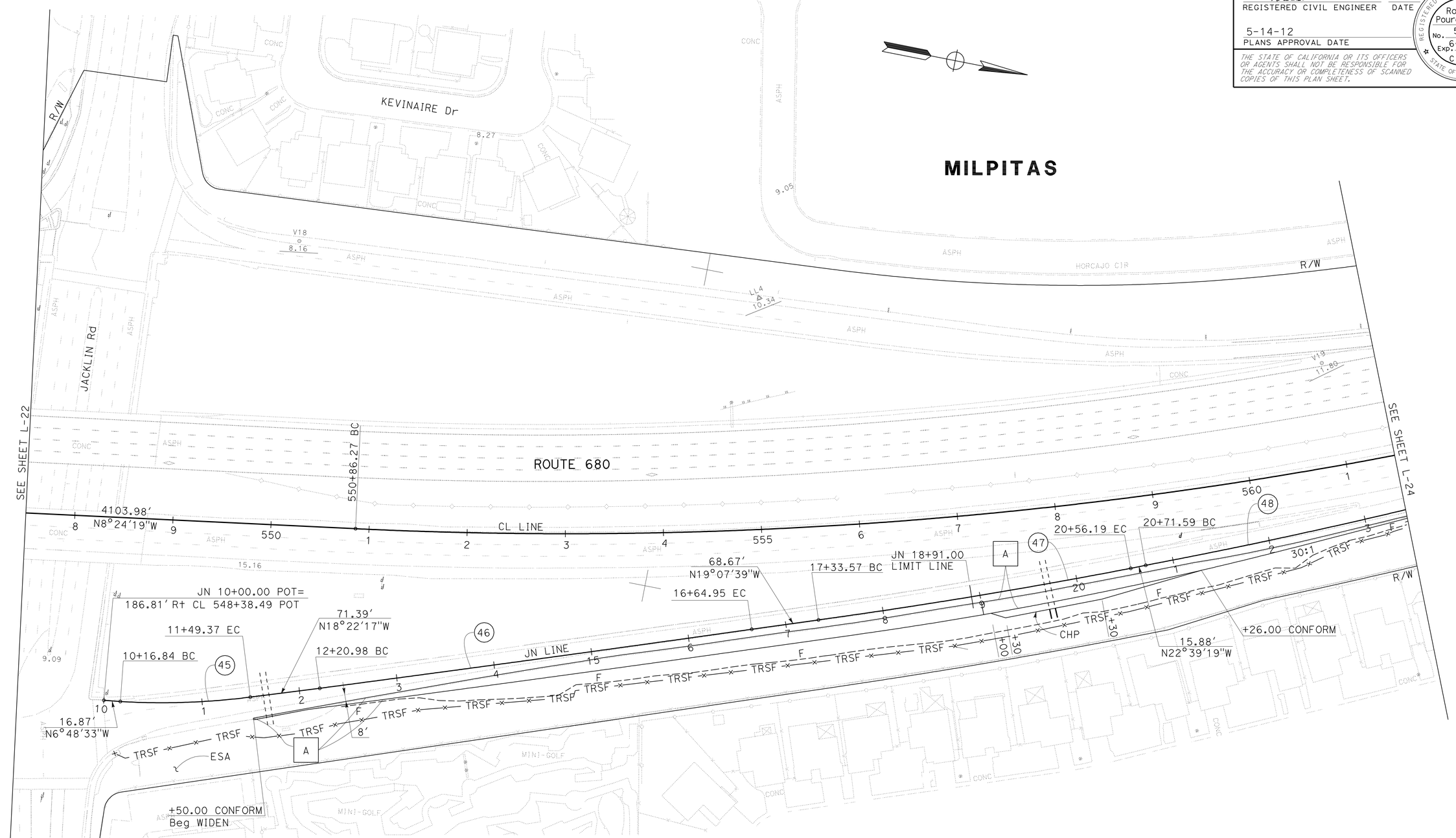

CURVE DATA

No. ⊕	R	Δ	T	L	N-COORDINATE	E-COORDINATE
45	711'	10° 41' 35"	66.51'	132.63'	1988243.790	6157310.790
46	46190'	00° 33' 03"	222.06'	444.12'	1973770.090	6114196.640
47	6086'	03° 02' 10"	161.28'	322.49'	1987040.400	6152041.800
48	5856'	03° 58' 41"	203.38'	406.60'	1987155.230	6152242.570

FOR NOTES, ABBREVIATIONS AND LEGEND, SEE SHEET L-1

LAYOUT

SCALE: 1" = 50'

L-23

STATE OF CALIFORNIA - DEPARTMENT OF TRANSPORTATION

Caltrans DESIGN

FUNCTIONAL SUPERVISOR: HASSAN NIKZAD

CALCULATED-DESIGNED BY: QUYNH P. NGUYEN

CHECKED BY: ROSTAM POUROUSHASB

REVISED BY / DATE REVISED

LAST REVISION 04-27-12

DATE PLOTTED => 14-MAY-2012
TIME PLOTTED => 10:30

NOTE:

FOR ACCURATE RIGHT OF WAY DATA, CONTACT
RIGHT OF WAY ENGINEERING AT THE DISTRICT OFFICE.

Dist	COUNTY	ROUTE	POST MILES TOTAL PROJECT	SHEET No.	TOTAL SHEETS
04	Ala,SCl	680	0.0/0.1, 0.1/9.9	29	319

REGISTERED CIVIL ENGINEER 2-13-12 DATE

5-14-12
PLANS APPROVAL DATE

REGISTERED PROFESSIONAL ENGINEER
Rostam Pouroushasb
No. 58173
Exp. 6-30-12
CIVIL
STATE OF CALIFORNIA

THE STATE OF CALIFORNIA OR ITS OFFICERS OR AGENTS SHALL NOT BE RESPONSIBLE FOR THE ACCURACY OR COMPLETENESS OF SCANNED COPIES OF THIS PLAN SHEET.

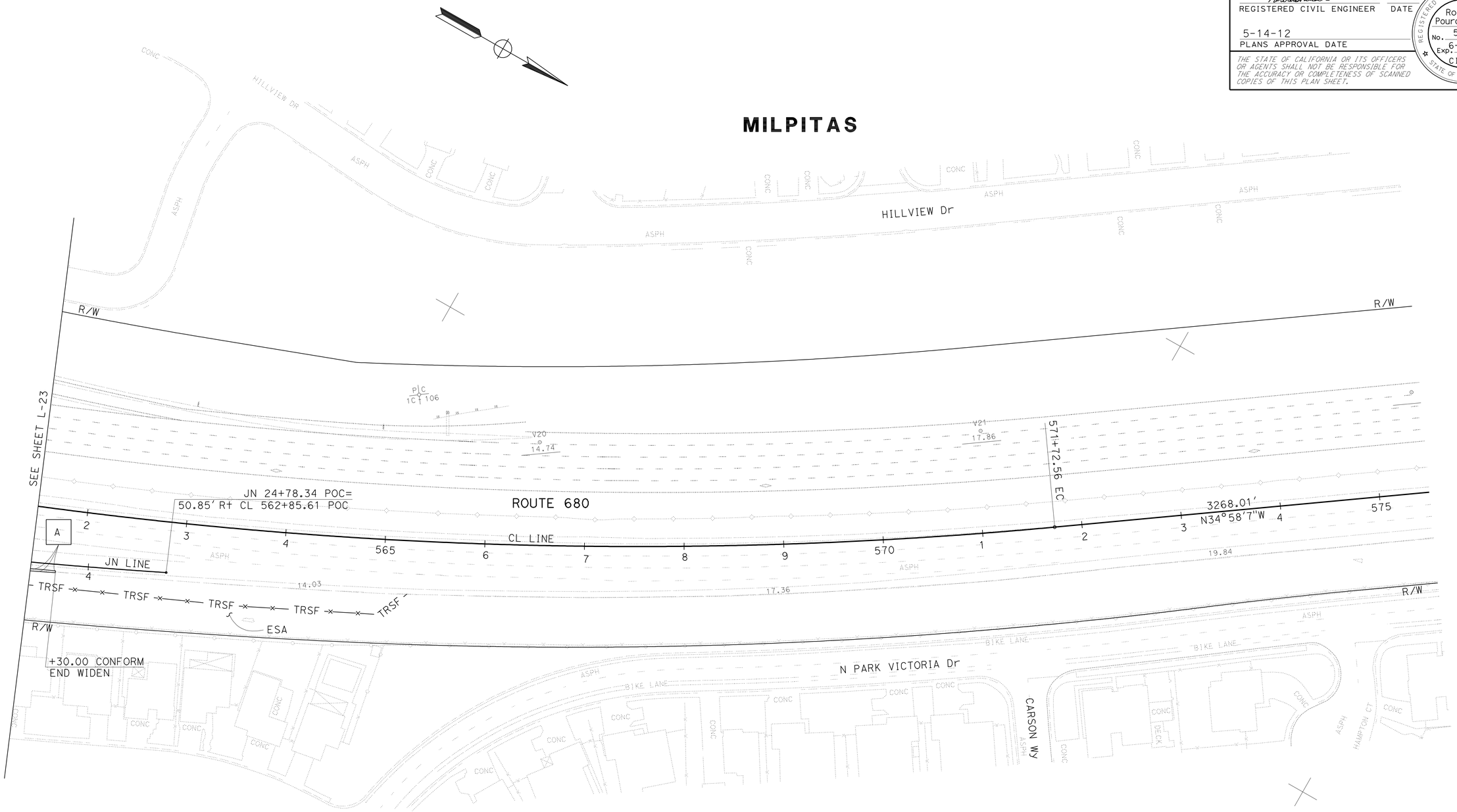

LAYOUT

SCALE: 1" = 50'

FOR NOTES, ABBREVIATIONS AND LEGEND, SEE SHEET L-1

L-24

STATE OF CALIFORNIA - DEPARTMENT OF TRANSPORTATION
DESIGN

FUNCTIONAL SUPERVISOR: HASSAN NIKZAD

CALCULATED-DESIGNED BY: QUYNH P. NGUYEN
CHECKED BY: ROSTAM POUROUSHASB

REVISED BY / DATE REVISED

LAST REVISION 04-27-12 | DATE PLOTTED => 14-MAY-2012 | TIME PLOTTED => 10:30

Dist	COUNTY	ROUTE	POST MILES TOTAL PROJECT	SHEET No.	TOTAL SHEETS
04	Ala,SCl	680	0.0/0.1, 0.1/9.9	30	319

REGISTERED CIVIL ENGINEER 2-13-12 DATE

5-14-12
PLANS APPROVAL DATE

REGISTERED PROFESSIONAL ENGINEER
Rostam Pouroushasb
No. 58173
Exp. 6-30-12
CIVIL
STATE OF CALIFORNIA

THE STATE OF CALIFORNIA OR ITS OFFICERS OR AGENTS SHALL NOT BE RESPONSIBLE FOR THE ACCURACY OR COMPLETENESS OF SCANNED COPIES OF THIS PLAN SHEET.

NOTE:

FOR ACCURATE RIGHT OF WAY DATA, CONTACT RIGHT OF WAY ENGINEERING AT THE DISTRICT OFFICE.

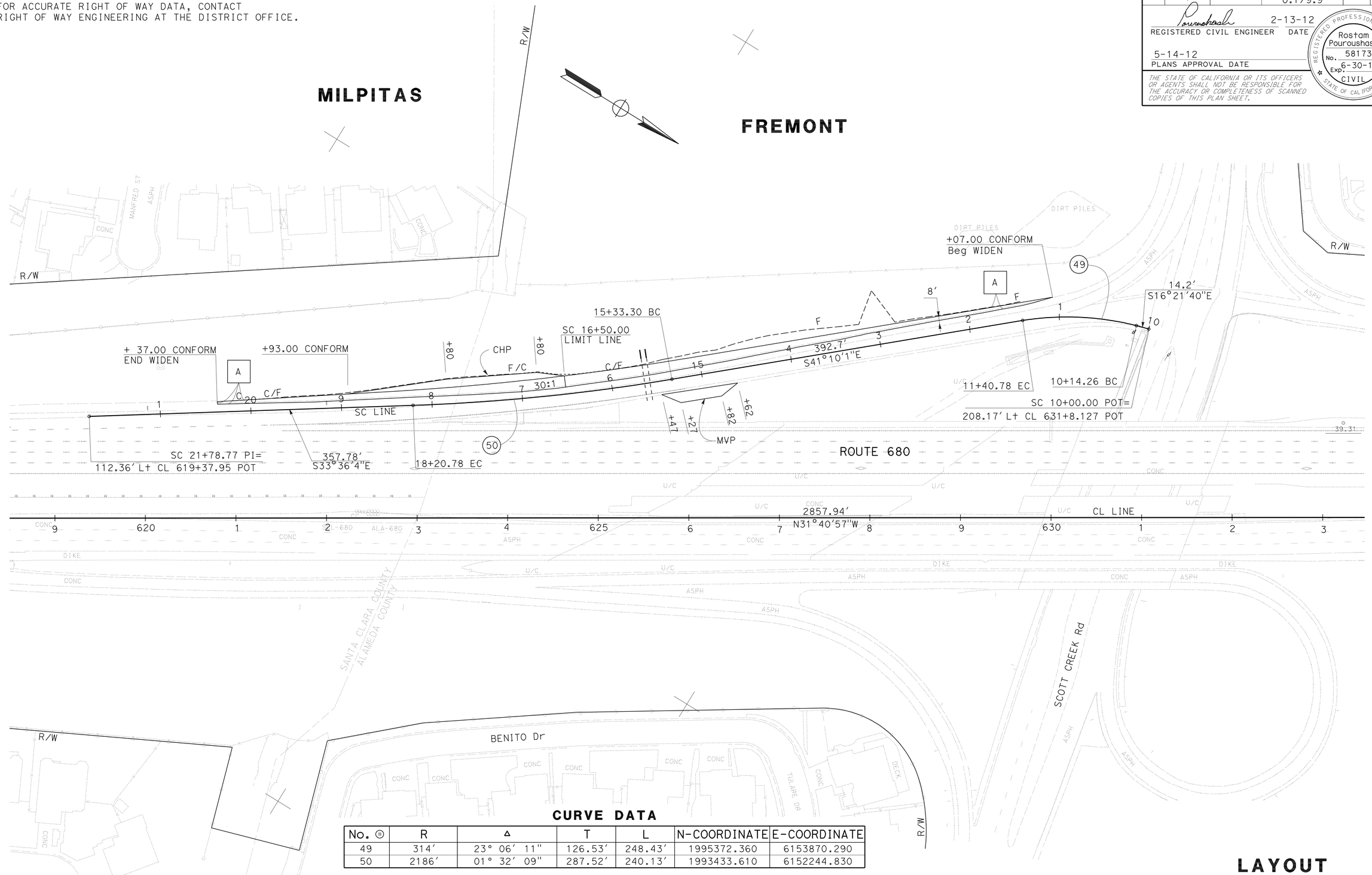

CURVE DATA

No. ⊕	R	Δ	T	L	N-COORDINATE	E-COORDINATE
49	314'	23° 06' 11"	126.53'	248.43'	1995372.360	6153870.290
50	2186'	01° 32' 09"	287.52'	240.13'	1993433.610	6152244.830

FOR NOTES, ABBREVIATIONS AND LEGEND, SEE SHEET L-1

LAYOUT

SCALE: 1" = 50'

L-25

STATE OF CALIFORNIA - DEPARTMENT OF TRANSPORTATION
DESIGN

FUNCTIONAL SUPERVISOR: HASSAN NIKZAD
CALCULATED-DESIGNED BY: QUYNH P. NGUYEN
CHECKED BY: ROSTAM POUROUSHASB
REVISED BY
DATE REVISED

LAST REVISION 01-30-12
DATE PLOTTED => 14-MAY-2012
TIME PLOTTED => 10:30

Dist	COUNTY	ROUTE	POST MILES TOTAL PROJECT	SHEET No.	TOTAL SHEETS
04	Ala,SCl	680	0.0/0.1, 0.1/9.9	31	319

REGISTERED CIVIL ENGINEER 2-13-12 DATE

5-14-12
PLANS APPROVAL DATE

REGISTERED PROFESSIONAL ENGINEER Rostam Pouroushasb No. 58173 Exp. 6-30-12 CIVIL STATE OF CALIFORNIA

THE STATE OF CALIFORNIA OR ITS OFFICERS OR AGENTS SHALL NOT BE RESPONSIBLE FOR THE ACCURACY OR COMPLETENESS OF SCANNED COPIES OF THIS PLAN SHEET.

ABBREVIATION:

RHMA (G) RUBBERIZED HOT MIX ASPHALT (GAP-GRADE)

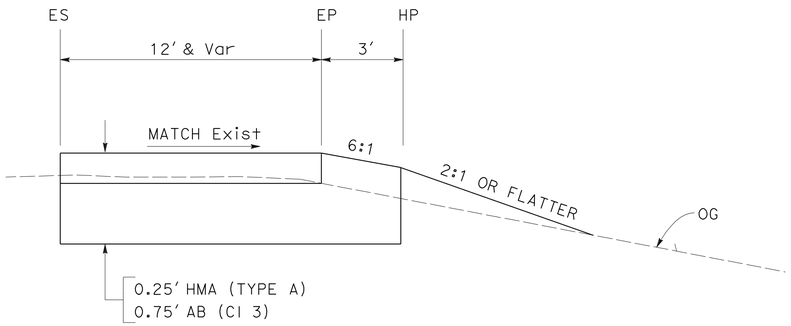

MAINTENANCE VEHICLE PULLOUT TYPICAL CROSS SECTION

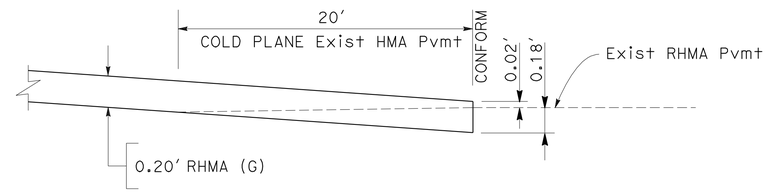

LONGITUDINAL PAVING CONFORM

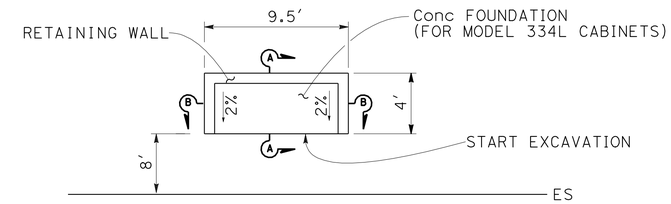

RETAINING WALL FOR CONTROLLER CABINETS PLAN

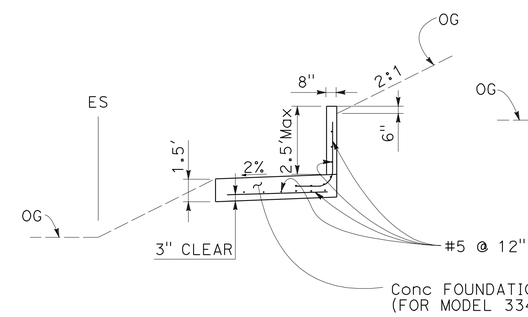

SECTION A-A

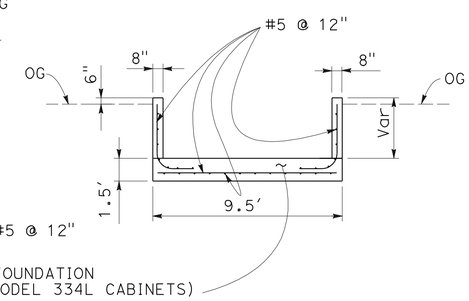

SECTION B-B

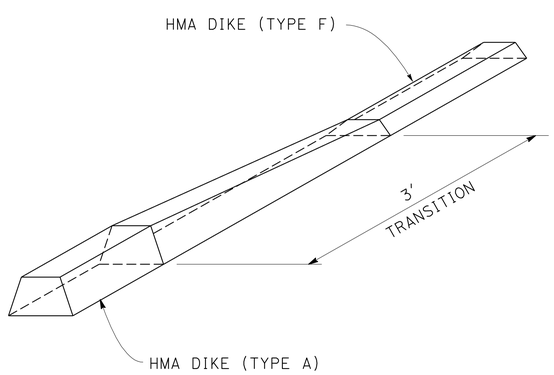

TRANSITION FROM HMA DIKE (TYPE A) TO HMA DIKE (TYPE F)

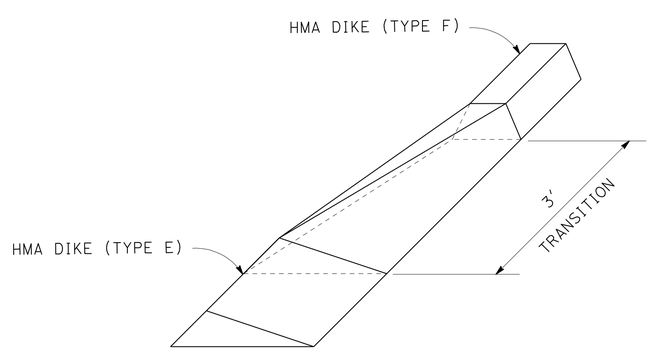

TRANSITION FROM HMA DIKE (TYPE E) TO HMA DIKE (TYPE F)

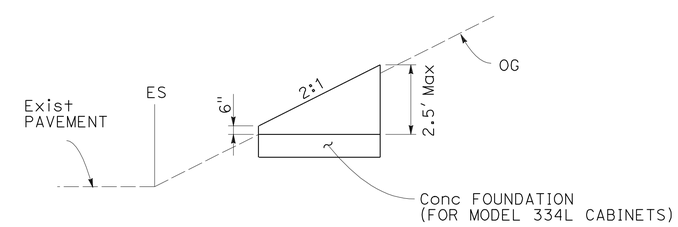

SIDE WALL PROFILE

CONSTRUCTION DETAILS

NO SCALE

C-1

STATE OF CALIFORNIA - DEPARTMENT OF TRANSPORTATION
Caltrans DESIGN

FUNCTIONAL SUPERVISOR: HASSAN NIKZAD
CALCULATED-DESIGNED BY: QUYNH P. NGUYEN
CHECKED BY: ROSTAM POUROUSHASB
REVISED BY
DATE REVISED

LAST REVISION 05-07-12
DATE PLOTTED => 15-MAY-2012
TIME PLOTTED => 11:05

Dist	COUNTY	ROUTE	POST MILES TOTAL PROJECT	SHEET No.	TOTAL SHEETS
04	Ala,SCl	680	0.0/0.1, 0.1/9.9	32	319

LICENSED LANDSCAPE ARCHITECT

5-14-12
PLANS APPROVAL DATE

LICENSED LANDSCAPE ARCHITECT
Laurie J. Smith No. 4262
Signature
8-31-12
Renewal Date
Date
STATE OF CALIFORNIA

THE STATE OF CALIFORNIA OR ITS OFFICERS OR AGENTS SHALL NOT BE RESPONSIBLE FOR THE ACCURACY OR COMPLETENESS OF SCANNED COPIES OF THIS PLAN SHEET.

NOTE:

FOR ACCURATE RIGHT OF WAY DATA, CONTACT RIGHT OF WAY ENGINEERING AT THE DISTRICT OFFICE.

LEGEND:

- EROSION CONTROL (TYPE 1)
- EROSION CONTROL (COMPOST BLANKET)
- EROSION CONTROL (HYDROSEED)
- EROSION CONTROL (TYPE 2) (BIOSTRIP)
- COMPOST, INCORPORATE EROSION CONTROL (HYDROSEED)
- MULCH
- FIBER ROLLS
- TFESA — TEMPORARY FENCE (TYPE ESA)

ABBREVIATIONS:

MVP	MAINTENANCE VEHICLE PULLOUT
(E) MVP	EXISTING MAINTENANCE VEHICLE PULLOUT
CHP	CALIFORNIA HIGHWAY PATROL
ESA	ENVIRONMENTALLY SENSITIVE AREA

SAN JOSE

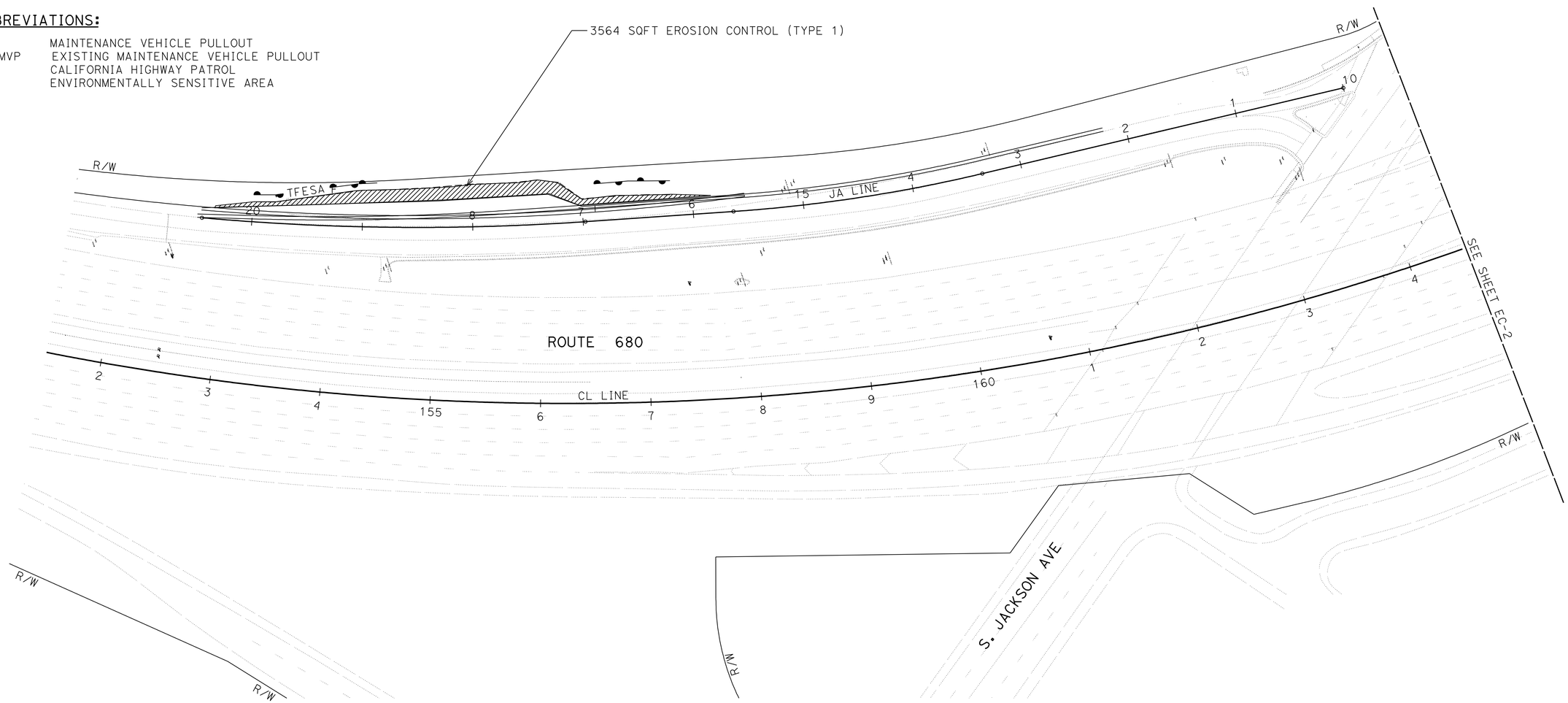

EROSION CONTROL PLAN

SCALE: 1" = 50'

EC-1

APPROVED FOR EROSION CONTROL WORK ONLY

STATE OF CALIFORNIA - DEPARTMENT OF TRANSPORTATION
Caltrans®
WATER QUALITY

SENIOR LANDSCAPE ARCHITECT: DAVID W YAM
CALCULATED-DESIGNED BY: LAURIE J SMITH
CHECKED BY: ALEX MC DONALD
REVISED BY
DATE REVISED

LAST REVISION 02-07-12
DATE PLOTTED => 14-MAY-2012
TIME PLOTTED => 10:31

Dist	COUNTY	ROUTE	POST MILES TOTAL PROJECT	SHEET No.	TOTAL SHEETS
04	Ala,SCl	680	0.0/0.1, 0.1/9.9	33	319

LICENSED LANDSCAPE ARCHITECT

5-14-12
PLANS APPROVAL DATE

LICENSED LANDSCAPE ARCHITECT
Laurie J. Smith No. 1895
Signature
8-31-12
Renewal Date
Date
STATE OF CALIFORNIA

THE STATE OF CALIFORNIA OR ITS OFFICERS OR AGENTS SHALL NOT BE RESPONSIBLE FOR THE ACCURACY OR COMPLETENESS OF SCANNED COPIES OF THIS PLAN SHEET.

NOTE:

FOR ACCURATE RIGHT OF WAY DATA, CONTACT RIGHT OF WAY ENGINEERING AT THE DISTRICT OFFICE.

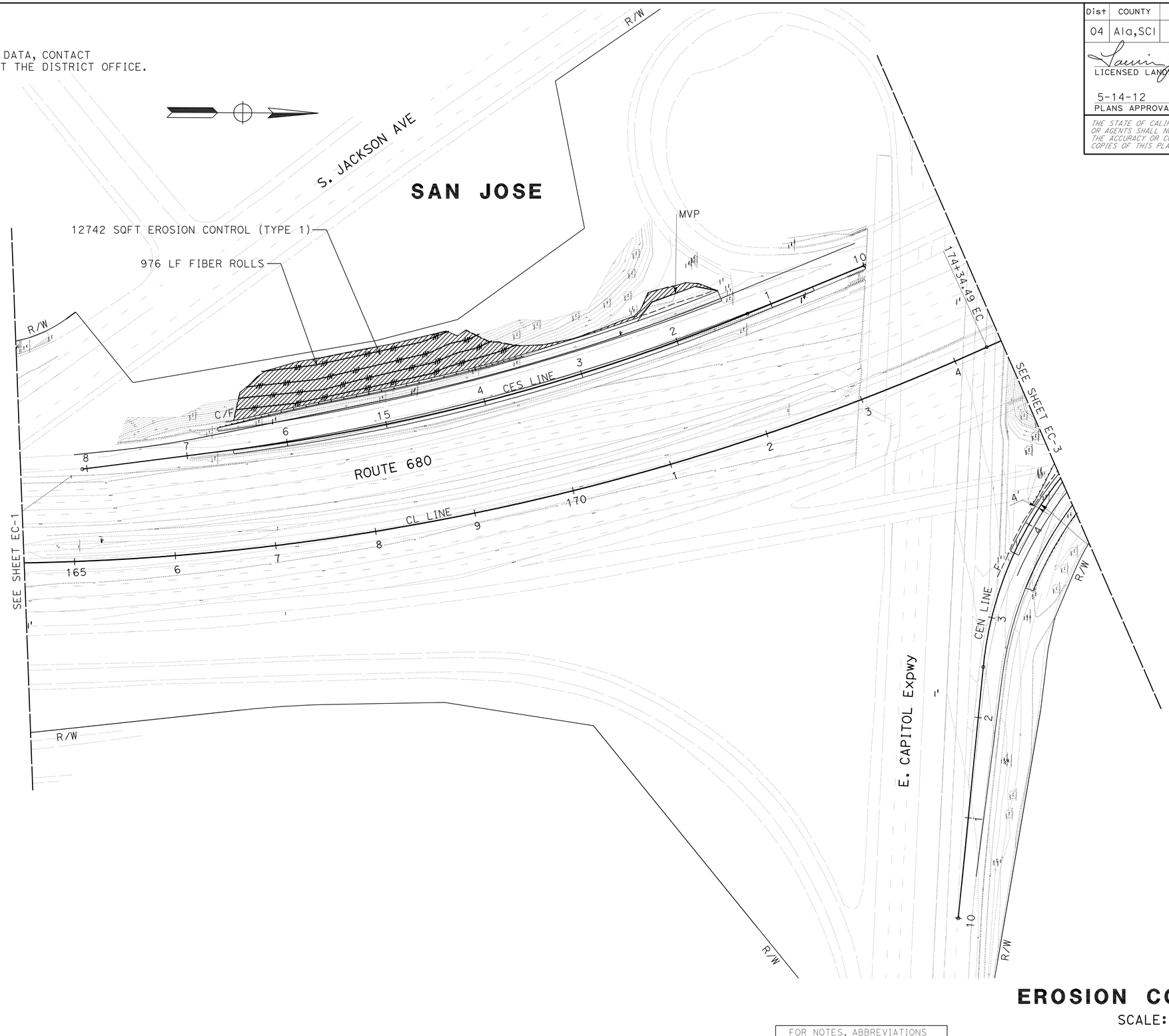

EROSION CONTROL PLAN

SCALE: 1" = 50'

EC-2

APPROVED FOR EROSION CONTROL WORK ONLY

FOR NOTES, ABBREVIATIONS AND LEGEND, SEE SHEET EC-1

STATE OF CALIFORNIA - DEPARTMENT OF TRANSPORTATION
Caltrans
WATER QUALITY

SENIOR LANDSCAPE ARCHITECT: DAVID W YAM
CALCULATED-DESIGNED BY: LAURIE J SMITH
CHECKED BY: ALEX MC DONALD
REVISED BY
DATE REVISED

LAST REVISION 02-09-12
DATE PLOTTED => 14-MAY-2012
TIME PLOTTED => 10:31

Dist	COUNTY	ROUTE	POST MILES TOTAL PROJECT	SHEET No.	TOTAL SHEETS
04	Ala,SCl	680	0.0/0.1, 0.1/9.9	34	319

LICENSED LANDSCAPE ARCHITECT

5-14-12
PLANS APPROVAL DATE

LICENSED LANDSCAPE ARCHITECT
Laurie J. Smith No. 4262
Signature
8-31-12
Renewal Date
Date
STATE OF CALIFORNIA

THE STATE OF CALIFORNIA OR ITS OFFICERS OR AGENTS SHALL NOT BE RESPONSIBLE FOR THE ACCURACY OR COMPLETENESS OF SCANNED COPIES OF THIS PLAN SHEET.

NOTE:

FOR ACCURATE RIGHT OF WAY DATA, CONTACT RIGHT OF WAY ENGINEERING AT THE DISTRICT OFFICE.

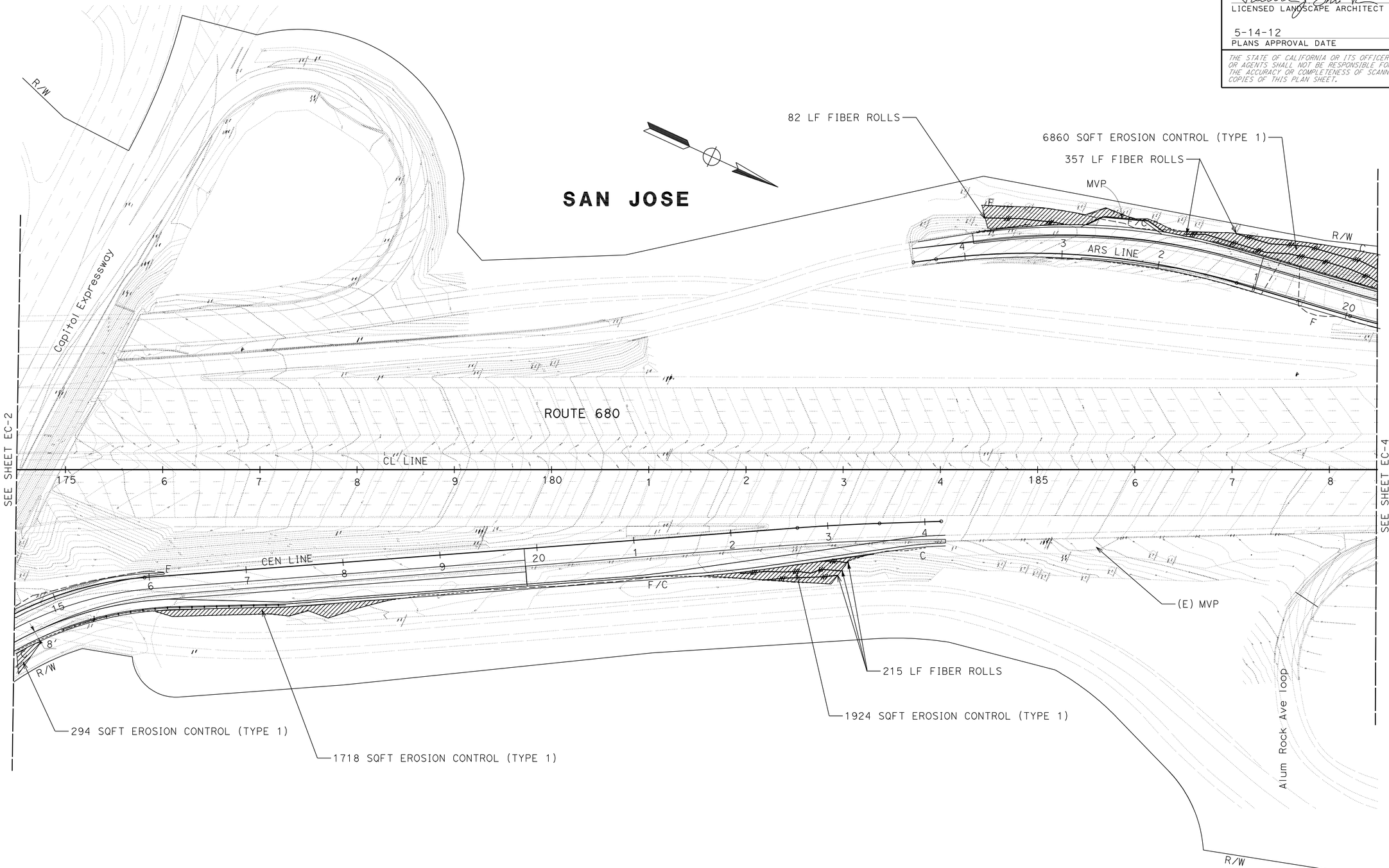

EROSION CONTROL PLAN

SCALE: 1" = 50'

EC-3

APPROVED FOR EROSION CONTROL WORK ONLY

FOR NOTES, ABBREVIATIONS AND LEGEND, SEE SHEET EC-1

STATE OF CALIFORNIA - DEPARTMENT OF TRANSPORTATION
Caltrans
WATER QUALITY

SENIOR LANDSCAPE ARCHITECT: DAVID W YAM

LAURIE J SMITH
ALEX MC DONALD

CALCULATED-DESIGNED BY
CHECKED BY
REVISED BY
DATE REVISED

LAST REVISION 02-07-12
DATE PLOTTED => 14-MAY-2012
TIME PLOTTED => 10:31

Dist	COUNTY	ROUTE	POST MILES TOTAL PROJECT	SHEET No.	TOTAL SHEETS
04	Ala,SCl	680	0.0/0.1, 0.1/9.9	35	319

LICENSED LANDSCAPE ARCHITECT

5-14-12
PLANS APPROVAL DATE

LICENSED LANDSCAPE ARCHITECT
Laurie J. Smith No. 4262
Signature
8-31-12
Renewal Date
Date
STATE OF CALIFORNIA

THE STATE OF CALIFORNIA OR ITS OFFICERS OR AGENTS SHALL NOT BE RESPONSIBLE FOR THE ACCURACY OR COMPLETENESS OF SCANNED COPIES OF THIS PLAN SHEET.

NOTE:

FOR ACCURATE RIGHT OF WAY DATA, CONTACT RIGHT OF WAY ENGINEERING AT THE DISTRICT OFFICE.

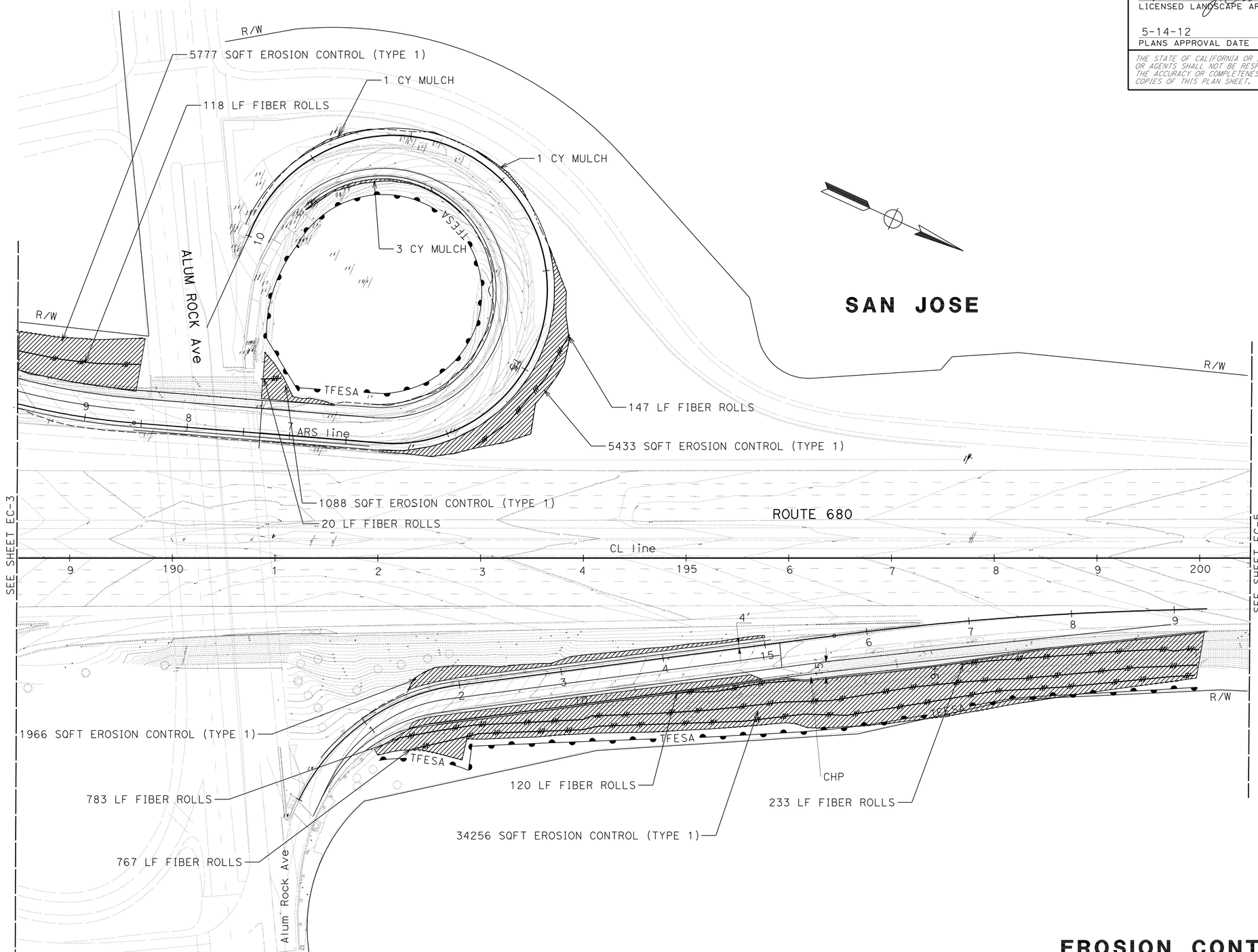

APPROVED FOR EROSION CONTROL WORK ONLY

FOR NOTES, ABBREVIATIONS AND LEGEND, SEE SHEET EC-1

EROSION CONTROL PLAN

SCALE: 1" = 50'

EC-4

STATE OF CALIFORNIA - DEPARTMENT OF TRANSPORTATION
Caltrans®
WATER QUALITY

SENIOR LANDSCAPE ARCHITECT: DAVID W YAM
CALCULATED-DESIGNED BY: LAURIE J SMITH
CHECKED BY: ALEX MC DONALD
REVISED BY
DATE REVISED

LAST REVISION 02-07-12
DATE PLOTTED => 14-MAY-2012
TIME PLOTTED => 10:31

Dist	COUNTY	ROUTE	POST MILES TOTAL PROJECT	SHEET No.	TOTAL SHEETS
04	Ala,SCl	680	0.0/0.1, 0.1/9.9	36	319

LICENSED LANDSCAPE ARCHITECT

5-14-12
PLANS APPROVAL DATE

LICENSED LANDSCAPE ARCHITECT
Laurie J. Smith No. 4262
Signature
8-31-12
Renewal Date
Date
STATE OF CALIFORNIA

THE STATE OF CALIFORNIA OR ITS OFFICERS OR AGENTS SHALL NOT BE RESPONSIBLE FOR THE ACCURACY OR COMPLETENESS OF SCANNED COPIES OF THIS PLAN SHEET.

NOTE:

FOR ACCURATE RIGHT OF WAY DATA, CONTACT
RIGHT OF WAY ENGINEERING AT THE DISTRICT OFFICE.

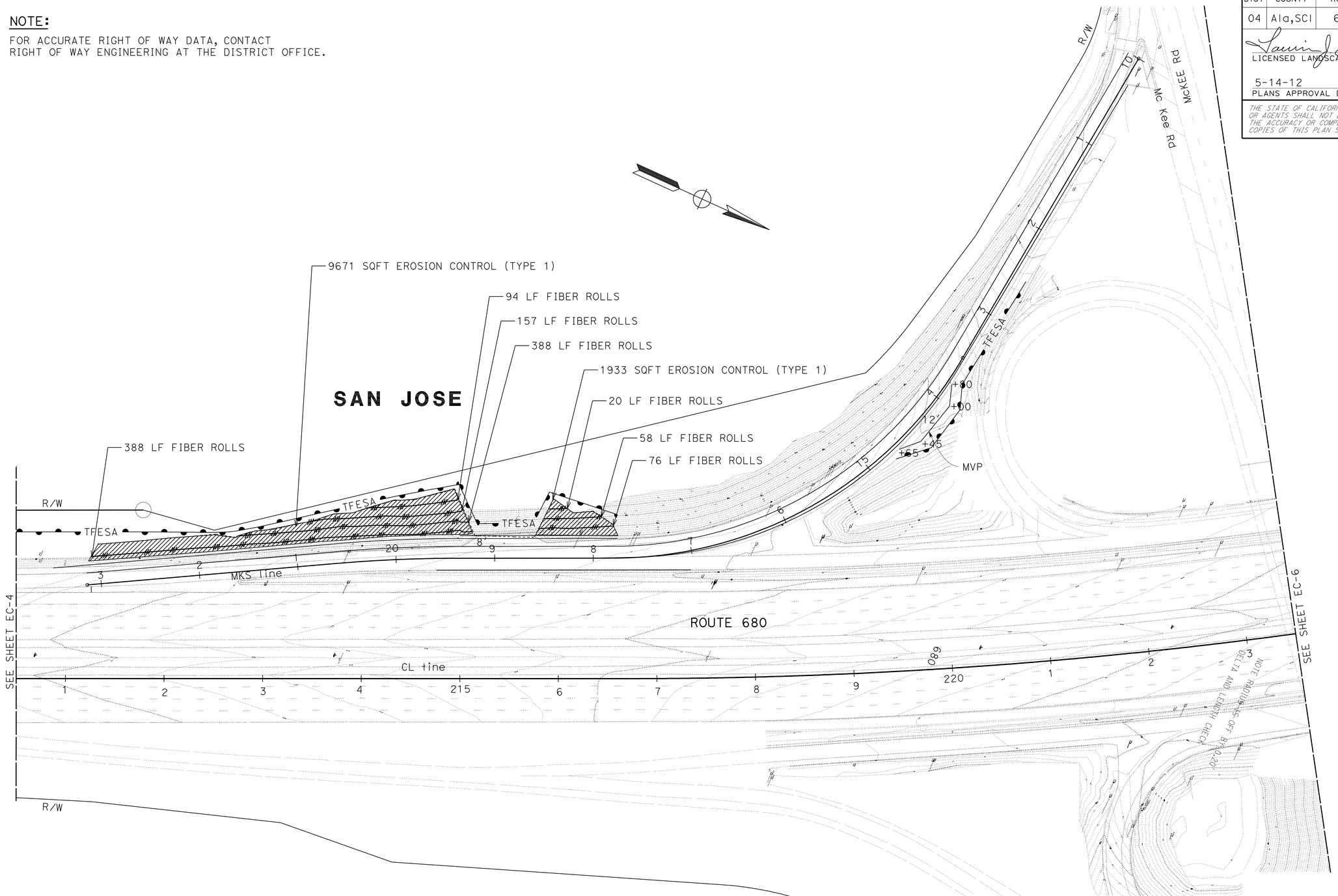

APPROVED FOR EROSION CONTROL WORK ONLY

FOR NOTES, ABBREVIATIONS AND LEGEND, SEE SHEET EC-1

EROSION CONTROL PLAN

SCALE: 1" = 50'

EC-5

STATE OF CALIFORNIA - DEPARTMENT OF TRANSPORTATION
Caltrans®
WATER QUALITY

SENIOR LANDSCAPE ARCHITECT: DAVID W YAM

CALCULATED-DESIGNED BY: LAURIE J SMITH
CHECKED BY: ALEX MC DONALD

REVISED BY
DATE REVISED

LAST REVISION: DATE PLOTTED => 14-MAY-2012
02-08-12 TIME PLOTTED => 10:31

Dist	COUNTY	ROUTE	POST MILES TOTAL PROJECT	SHEET No.	TOTAL SHEETS
04	Ala,SCl	680	0.0/0.1, 0.1/9.9	37	319

LICENSED LANDSCAPE ARCHITECT

5-14-12
PLANS APPROVAL DATE

LICENSED LANDSCAPE ARCHITECT
Laurie J. Smith No. 4262
Signature
8-31-12
Renewal Date
Date
STATE OF CALIFORNIA

THE STATE OF CALIFORNIA OR ITS OFFICERS OR AGENTS SHALL NOT BE RESPONSIBLE FOR THE ACCURACY OR COMPLETENESS OF SCANNED COPIES OF THIS PLAN SHEET.

NOTE:

FOR ACCURATE RIGHT OF WAY DATA, CONTACT RIGHT OF WAY ENGINEERING AT THE DISTRICT OFFICE.

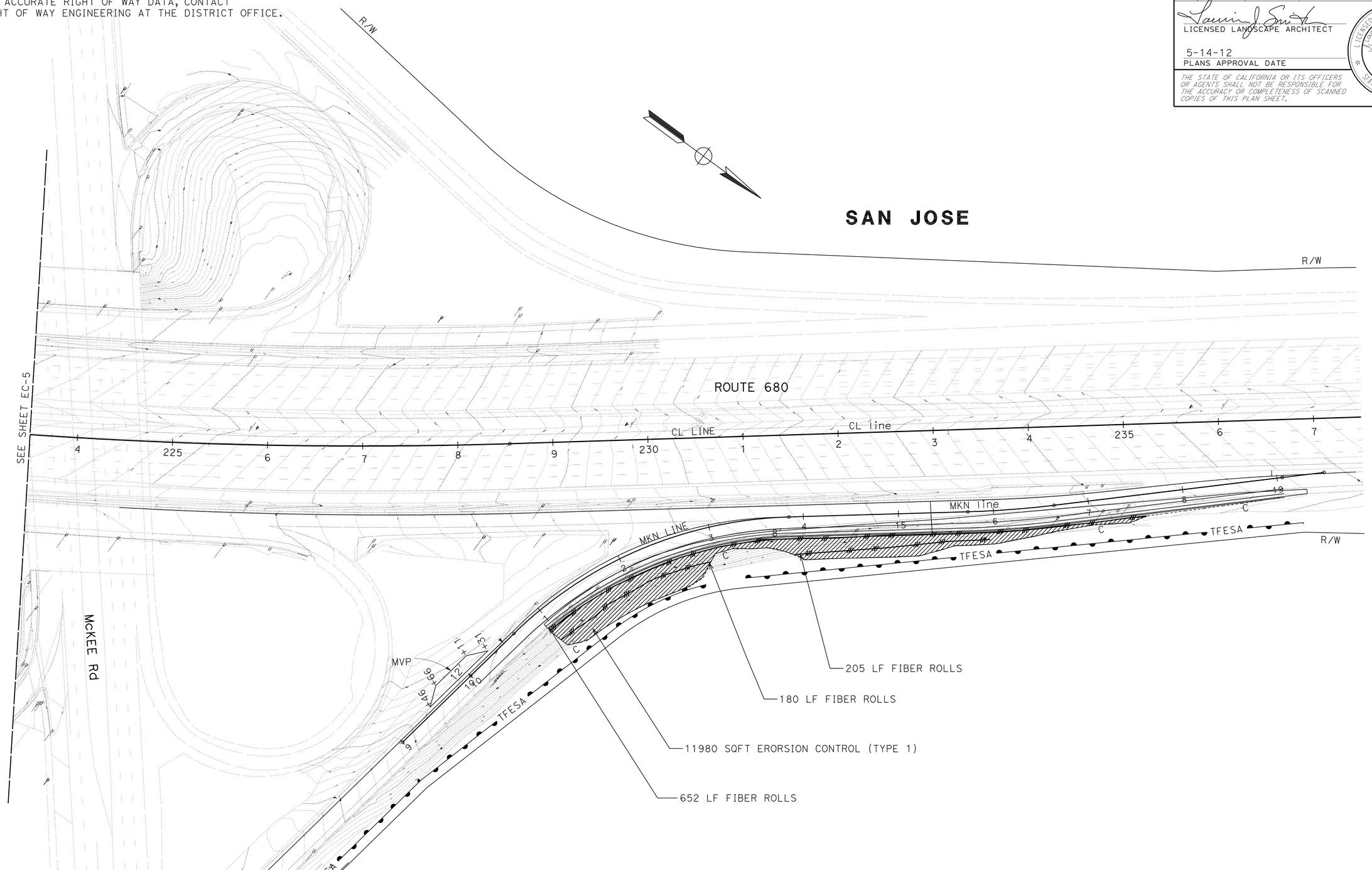

EROSION CONTROL PLAN

SCALE: 1" = 50'

EC-6

APPROVED FOR EROSION CONTROL WORK ONLY

FOR NOTES, ABBREVIATIONS AND LEGEND, SEE SHEET EC-1

STATE OF CALIFORNIA - DEPARTMENT OF TRANSPORTATION
Caltrans
WATER QUALITY

SENIOR LANDSCAPE ARCHITECT: DAVID W YAM

CALCULATED-DESIGNED BY: LAURIE J SMITH
CHECKED BY: ALEX MC DONALD

REVISED BY
DATE REVISED

LAST REVISION 10-10-11
DATE PLOTTED => 14-MAY-2012
TIME PLOTTED => 10:32

Dist	COUNTY	ROUTE	POST MILES TOTAL PROJECT	SHEET No.	TOTAL SHEETS
04	Ala,SCl	680	0.0/0.1, 0.1/9.9	38	319

LICENSED LANDSCAPE ARCHITECT

5-14-12
PLANS APPROVAL DATE

LICENSED LANDSCAPE ARCHITECT
Laurie J. Smith No. 4262
Signature
8-31-12
Renewal Date
Date
STATE OF CALIFORNIA

THE STATE OF CALIFORNIA OR ITS OFFICERS OR AGENTS SHALL NOT BE RESPONSIBLE FOR THE ACCURACY OR COMPLETENESS OF SCANNED COPIES OF THIS PLAN SHEET.

NOTE:

FOR ACCURATE RIGHT OF WAY DATA, CONTACT RIGHT OF WAY ENGINEERING AT THE DISTRICT OFFICE.

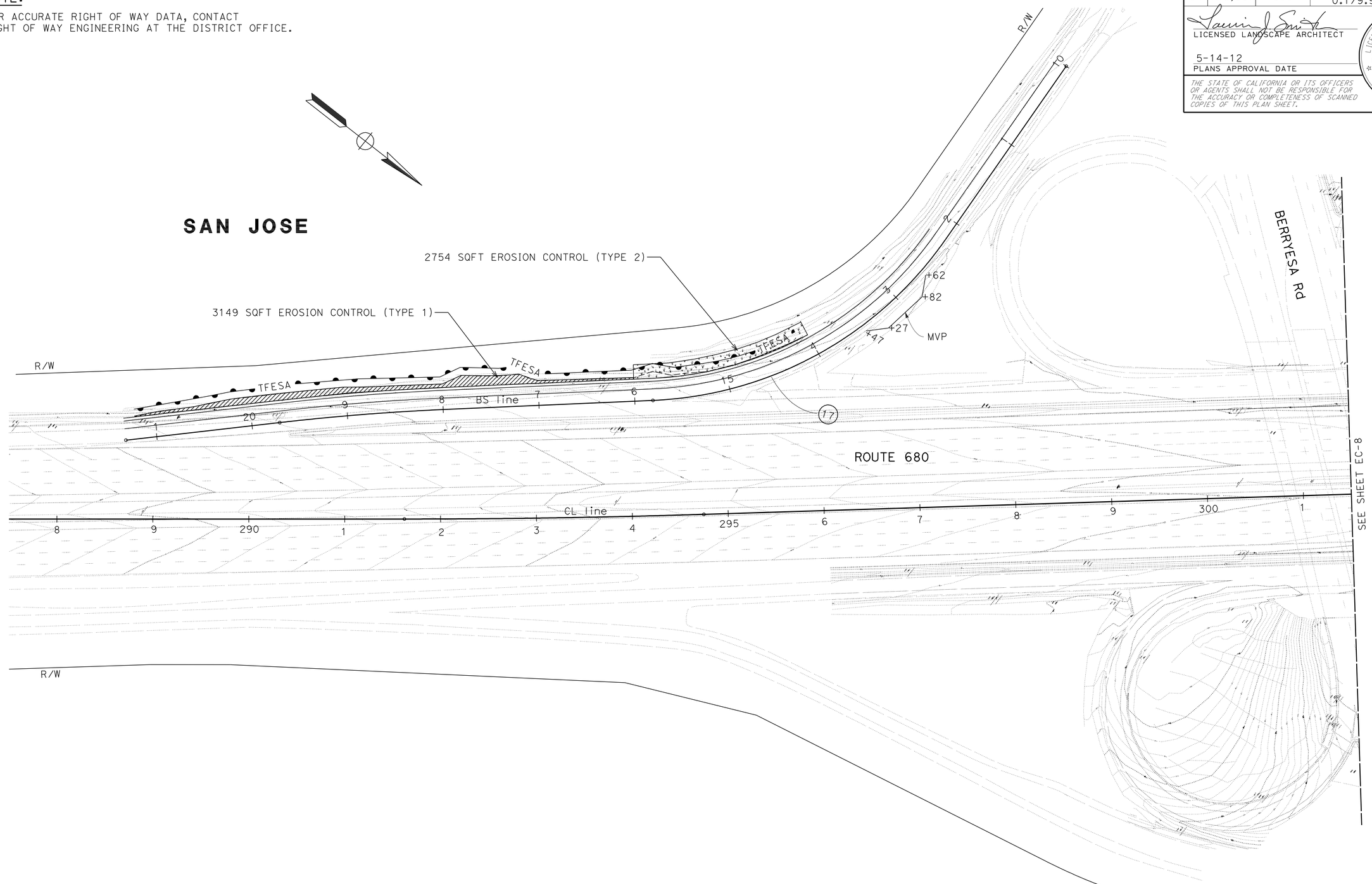

EROSION CONTROL PLAN

SCALE: 1" = 50'

EC-7

APPROVED FOR EROSION CONTROL WORK ONLY

FOR NOTES, ABBREVIATIONS AND LEGEND, SEE SHEET L-1

STATE OF CALIFORNIA - DEPARTMENT OF TRANSPORTATION
Caltrans
WATER QUALITY

SENIOR LANDSCAPE ARCHITECT: DAVID W YAM

CALCULATED-DESIGNED BY: LAURIE J SMITH
CHECKED BY: ALEX MC DONALD

REVISED BY
DATE REVISED

LAST REVISION 02-08-12
DATE PLOTTED => 14-MAY-2012
TIME PLOTTED => 10:32

Dist	COUNTY	ROUTE	POST MILES TOTAL PROJECT	SHEET No.	TOTAL SHEETS
04	Ala,SCl	680	0.0/0.1, 0.1/9.9	39	319

LICENSED LANDSCAPE ARCHITECT

5-14-12
PLANS APPROVAL DATE

LICENSED LANDSCAPE ARCHITECT
Laurie J. Smith No. 4262
Signature
8-31-12
Renewal Date
Date
STATE OF CALIFORNIA

THE STATE OF CALIFORNIA OR ITS OFFICERS OR AGENTS SHALL NOT BE RESPONSIBLE FOR THE ACCURACY OR COMPLETENESS OF SCANNED COPIES OF THIS PLAN SHEET.

NOTE:

FOR ACCURATE RIGHT OF WAY DATA, CONTACT RIGHT OF WAY ENGINEERING AT THE DISTRICT OFFICE.

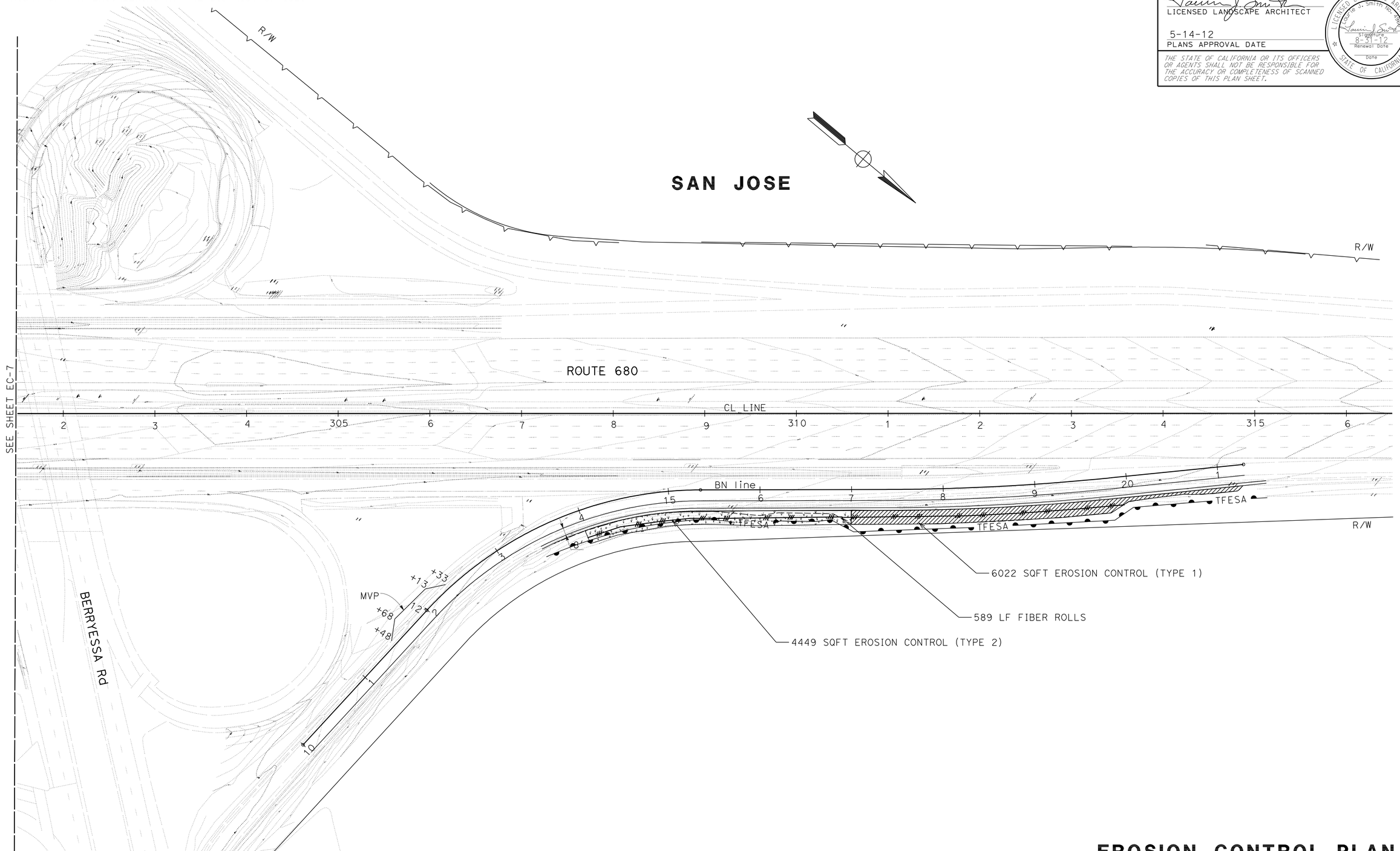

EROSION CONTROL PLAN

SCALE: 1" = 50'

EC-8

APPROVED FOR EROSION CONTROL WORK ONLY

FOR NOTES, ABBREVIATIONS AND LEGEND, SEE SHEET EC-1

STATE OF CALIFORNIA - DEPARTMENT OF TRANSPORTATION
Caltrans®
WATER QUALITY

SENIOR LANDSCAPE ARCHITECT: DAVID W YAM

CALCULATED-DESIGNED BY: LAURIE J SMITH
CHECKED BY: ALEX MC DONALD

REVISED BY
DATE REVISED

LAST REVISION 02-08-12
DATE PLOTTED => 14-MAY-2012
TIME PLOTTED => 10:32

Dist	COUNTY	ROUTE	POST MILES TOTAL PROJECT	SHEET No.	TOTAL SHEETS
04	Ala,SCl	680	0.0/0.1, 0.1/9.9	40	319

LICENSED LANDSCAPE ARCHITECT

5-14-12
PLANS APPROVAL DATE

LICENSED LANDSCAPE ARCHITECT
Laurie J. Smith No. 4262
Signature
8-31-12
Renewal Date
Date
STATE OF CALIFORNIA

THE STATE OF CALIFORNIA OR ITS OFFICERS OR AGENTS SHALL NOT BE RESPONSIBLE FOR THE ACCURACY OR COMPLETENESS OF SCANNED COPIES OF THIS PLAN SHEET.

NOTE:

FOR ACCURATE RIGHT OF WAY DATA, CONTACT RIGHT OF WAY ENGINEERING AT THE DISTRICT OFFICE.

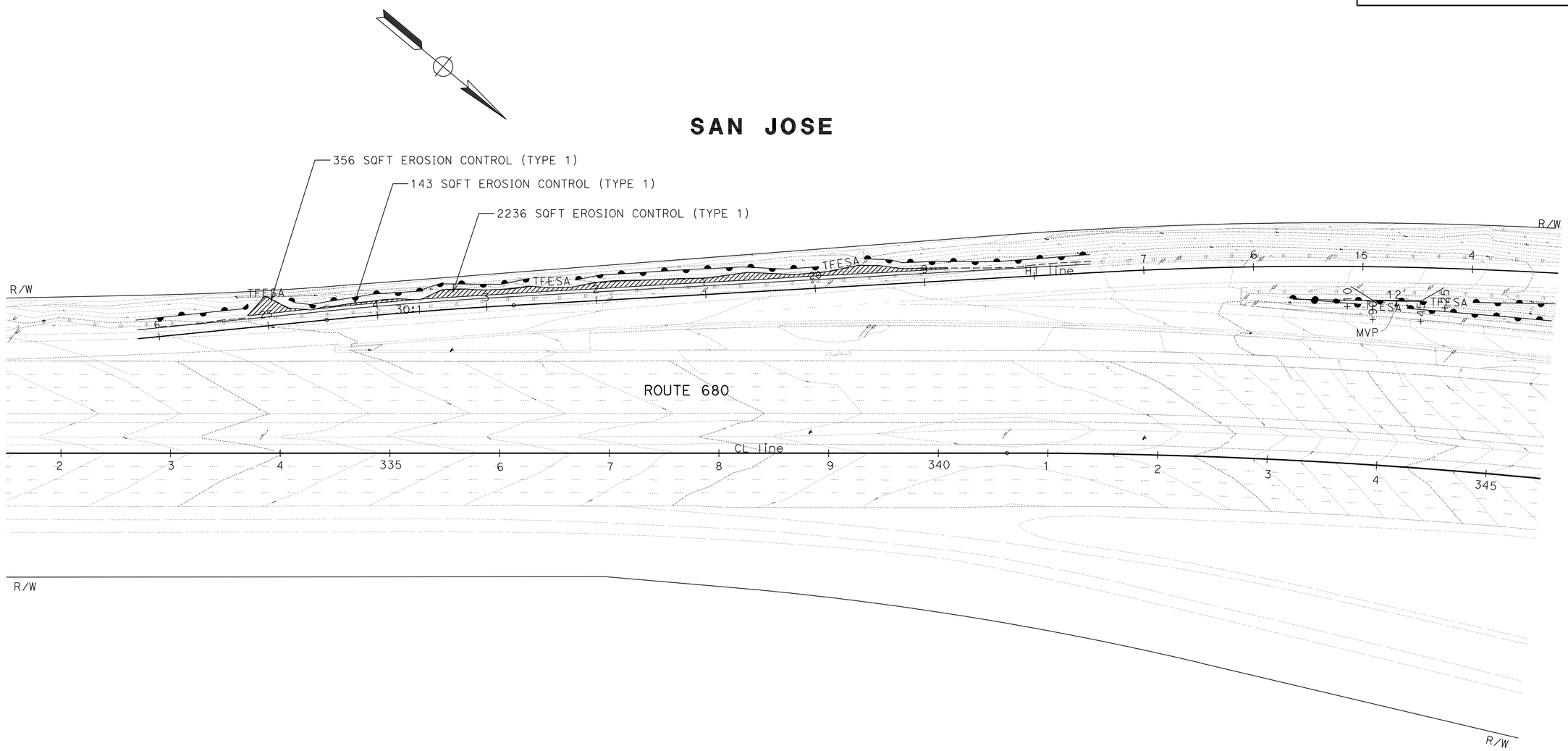

EROSION CONTROL PLAN

SCALE: 1" = 50'

EC-9

APPROVED FOR EROSION CONTROL WORK ONLY

FOR NOTES, ABBREVIATIONS AND LEGEND, SEE SHEET EC-1

STATE OF CALIFORNIA - DEPARTMENT OF TRANSPORTATION

Caltrans

WATER QUALITY

SENIOR LANDSCAPE ARCHITECT: DAVID W YAM

CALCULATED-DESIGNED BY: LAURIE J SMITH

CHECKED BY: ALEX MC DONALD

REVISED BY

DATE REVISED

LAST REVISION 02-09-12

DATE PLOTTED => 14-MAY-2012
TIME PLOTTED => 10:32

Dist	COUNTY	ROUTE	POST MILES TOTAL PROJECT	SHEET No.	TOTAL SHEETS
04	Ala,SCl	680	0.0/0.1, 0.1/9.9	41	319

LICENSED LANDSCAPE ARCHITECT

5-14-12
PLANS APPROVAL DATE

LICENSED LANDSCAPE ARCHITECT
Laurie J. Smith No. 4262
Signature
8-31-12
Renewal Date
Date
STATE OF CALIFORNIA

THE STATE OF CALIFORNIA OR ITS OFFICERS OR AGENTS SHALL NOT BE RESPONSIBLE FOR THE ACCURACY OR COMPLETENESS OF SCANNED COPIES OF THIS PLAN SHEET.

NOTE:

FOR ACCURATE RIGHT OF WAY DATA, CONTACT RIGHT OF WAY ENGINEERING AT THE DISTRICT OFFICE.

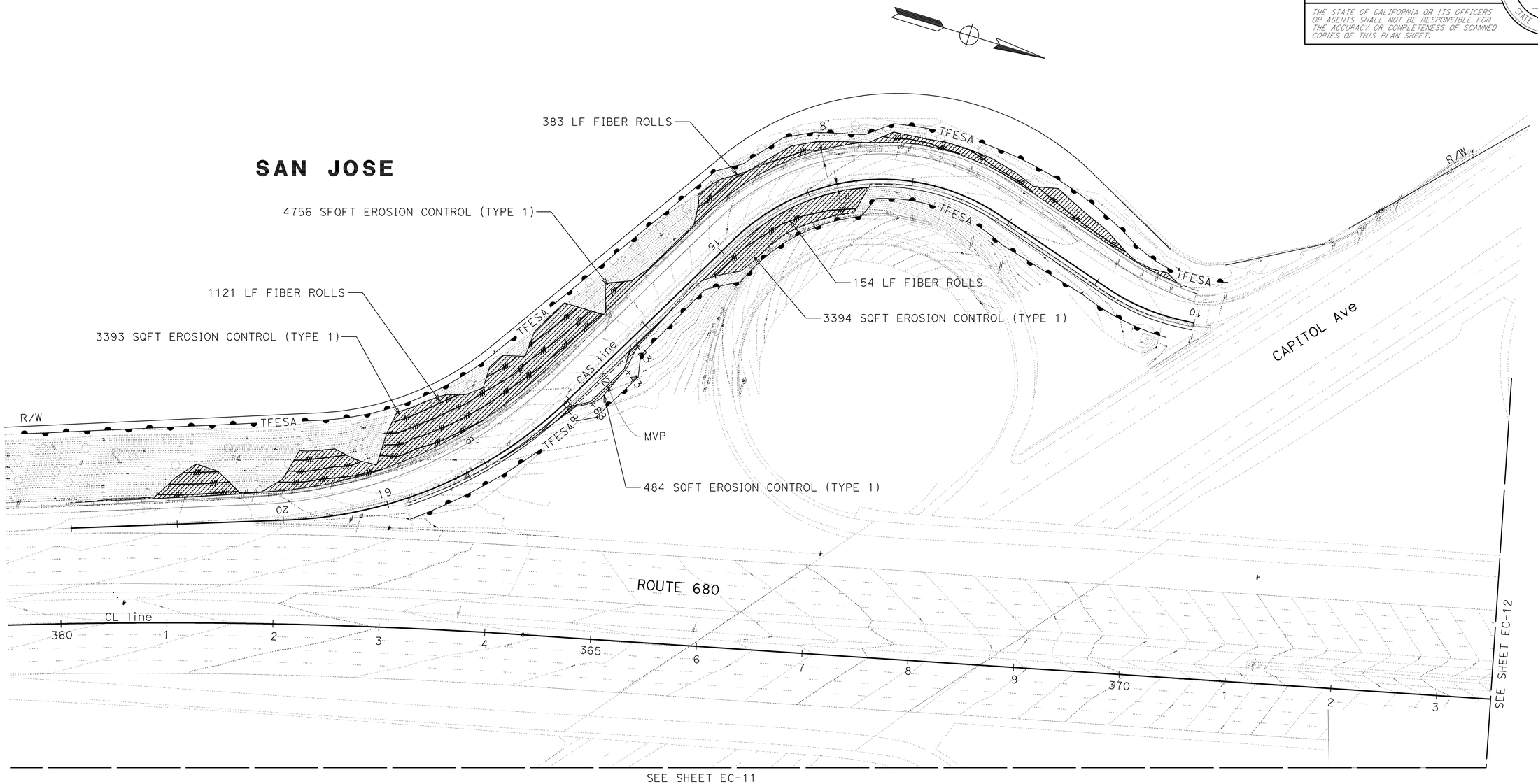

EROSION CONTROL PLAN

SCALE: 1" = 50'

EC-10

APPROVED FOR EROSION CONTROL WORK ONLY

FOR NOTES, ABBREVIATIONS AND LEGEND, SEE SHEET EC-1

STATE OF CALIFORNIA - DEPARTMENT OF TRANSPORTATION
Caltrans
WATER QUALITY

SENIOR LANDSCAPE ARCHITECT: DAVID W YAM

CALCULATED-DESIGNED BY: LAURIE J SMITH
CHECKED BY: ALEX MC DONALD

REVISED BY
DATE REVISED

LAST REVISION 02-09-12
DATE PLOTTED => 14-MAY-2012
TIME PLOTTED => 10:32

Dist	COUNTY	ROUTE	POST MILES TOTAL PROJECT	SHEET No.	TOTAL SHEETS
04	Ala,SCl	680	0.0/0.1, 0.1/9.9	42	319

LICENSED LANDSCAPE ARCHITECT

5-14-12
PLANS APPROVAL DATE

LICENSED LANDSCAPE ARCHITECT
Laurie J. Smith, No. 4262
Signature
8-31-12
Renewal Date
Date
STATE OF CALIFORNIA

THE STATE OF CALIFORNIA OR ITS OFFICERS OR AGENTS SHALL NOT BE RESPONSIBLE FOR THE ACCURACY OR COMPLETENESS OF SCANNED COPIES OF THIS PLAN SHEET.

NOTE:

FOR ACCURATE RIGHT OF WAY DATA, CONTACT RIGHT OF WAY ENGINEERING AT THE DISTRICT OFFICE.

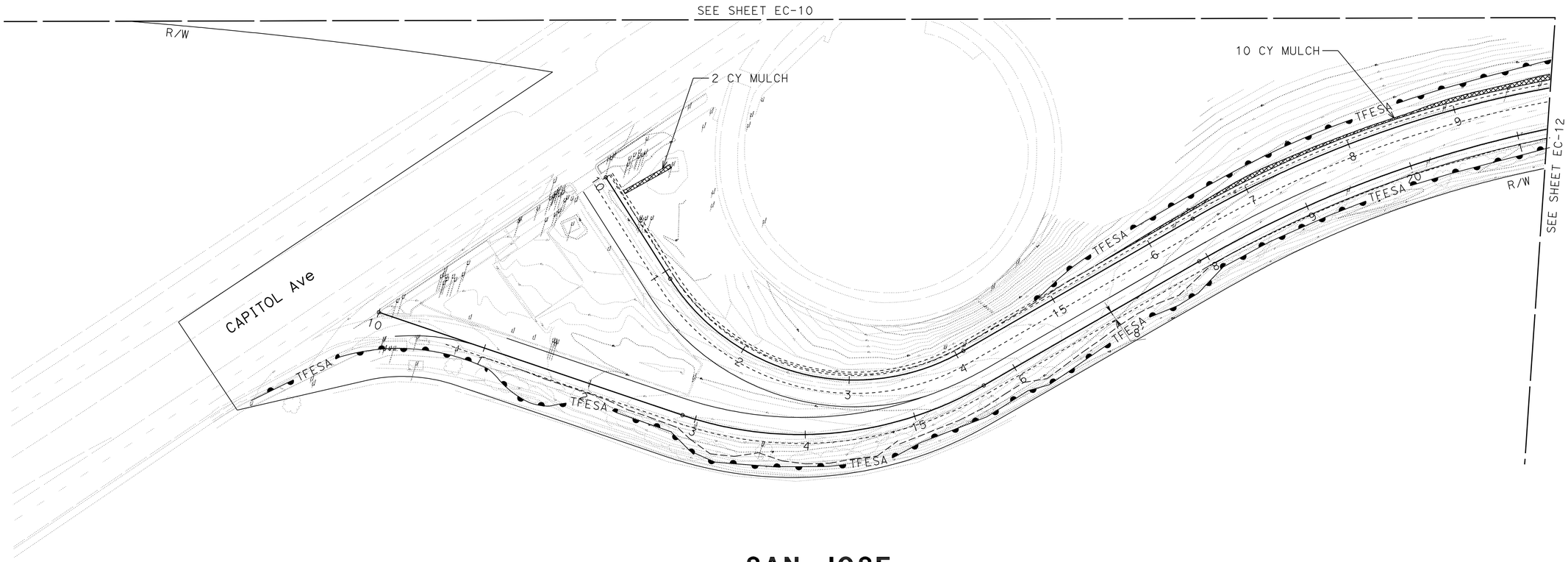

SAN JOSE

EROSION CONTROL PLAN

SCALE: 1" = 50'

EC-11

APPROVED FOR EROSION CONTROL WORK ONLY

FOR NOTES, ABBREVIATIONS AND LEGEND, SEE SHEET EC-1

STATE OF CALIFORNIA - DEPARTMENT OF TRANSPORTATION
Caltrans
WATER QUALITY

SENIOR LANDSCAPE ARCHITECT: DAVID W YAM
CALCULATED-DESIGNED BY: LAURIE J SMITH
CHECKED BY: ALEX MC DONALD
REVISED BY
DATE REVISED

LAST REVISION 02-13-12
DATE PLOTTED => 14-MAY-2012
TIME PLOTTED => 10:32

Dist	COUNTY	ROUTE	POST MILES TOTAL PROJECT	SHEET No.	TOTAL SHEETS
04	Ala,SCl	680	0.0/0.1, 0.1/9.9	43	319

LICENSED LANDSCAPE ARCHITECT

5-14-12
PLANS APPROVAL DATE

LICENSED LANDSCAPE ARCHITECT
Laurie J. Smith No. 4262
Signature
8-31-12
Renewal Date
Date
STATE OF CALIFORNIA

THE STATE OF CALIFORNIA OR ITS OFFICERS OR AGENTS SHALL NOT BE RESPONSIBLE FOR THE ACCURACY OR COMPLETENESS OF SCANNED COPIES OF THIS PLAN SHEET.

NOTE:

FOR ACCURATE RIGHT OF WAY DATA, CONTACT RIGHT OF WAY ENGINEERING AT THE DISTRICT OFFICE.

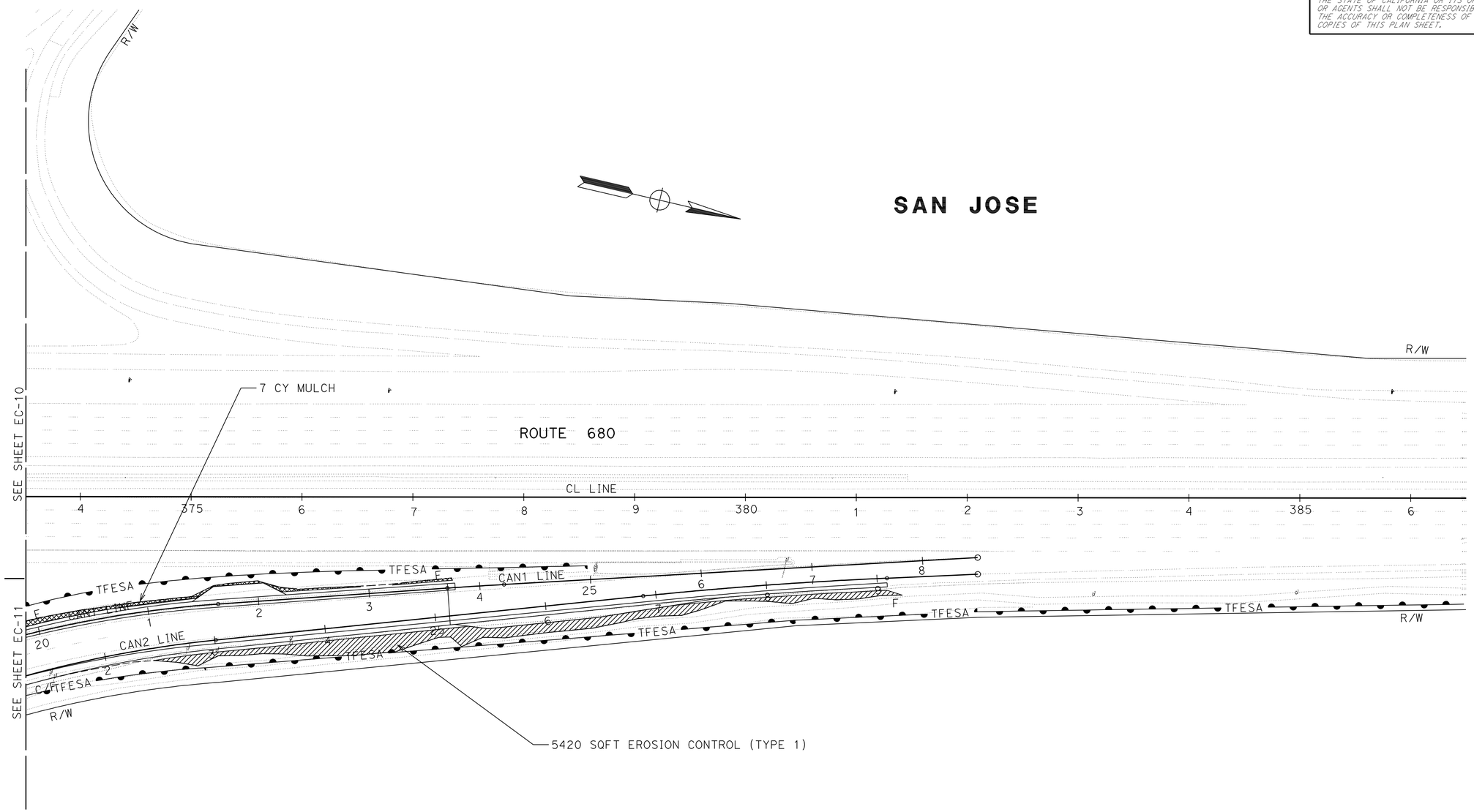

EROSION CONTROL PLAN

SCALE: 1" = 50'

EC-12

APPROVED FOR EROSION CONTROL WORK ONLY

FOR NOTES, ABBREVIATIONS AND LEGEND, SEE SHEET EC-1

STATE OF CALIFORNIA - DEPARTMENT OF TRANSPORTATION
Caltrans
WATER QUALITY

SENIOR LANDSCAPE ARCHITECT: DAVID W YAM

CALCULATED-DESIGNED BY: LAURIE J SMITH
CHECKED BY: ALEX MC DONALD

REVISED BY
DATE REVISED

LAST REVISION 02-09-12
DATE PLOTTED => 14-MAY-2012
TIME PLOTTED => 10:32

Dist	COUNTY	ROUTE	POST MILES TOTAL PROJECT	SHEET No.	TOTAL SHEETS
04	Ala,SCl	680	0.0/0.1, 0.1/9.9	44	319

LICENSED LANDSCAPE ARCHITECT

5-14-12
PLANS APPROVAL DATE

THE STATE OF CALIFORNIA OR ITS OFFICERS OR AGENTS SHALL NOT BE RESPONSIBLE FOR THE ACCURACY OR COMPLETENESS OF SCANNED COPIES OF THIS PLAN SHEET.

LICENSED LANDSCAPE ARCHITECT
Laurie J. Smith No. 4262
Signature
8-31-12
Renewal Date
Date
STATE OF CALIFORNIA

NOTE:

FOR ACCURATE RIGHT OF WAY DATA, CONTACT RIGHT OF WAY ENGINEERING AT THE DISTRICT OFFICE.

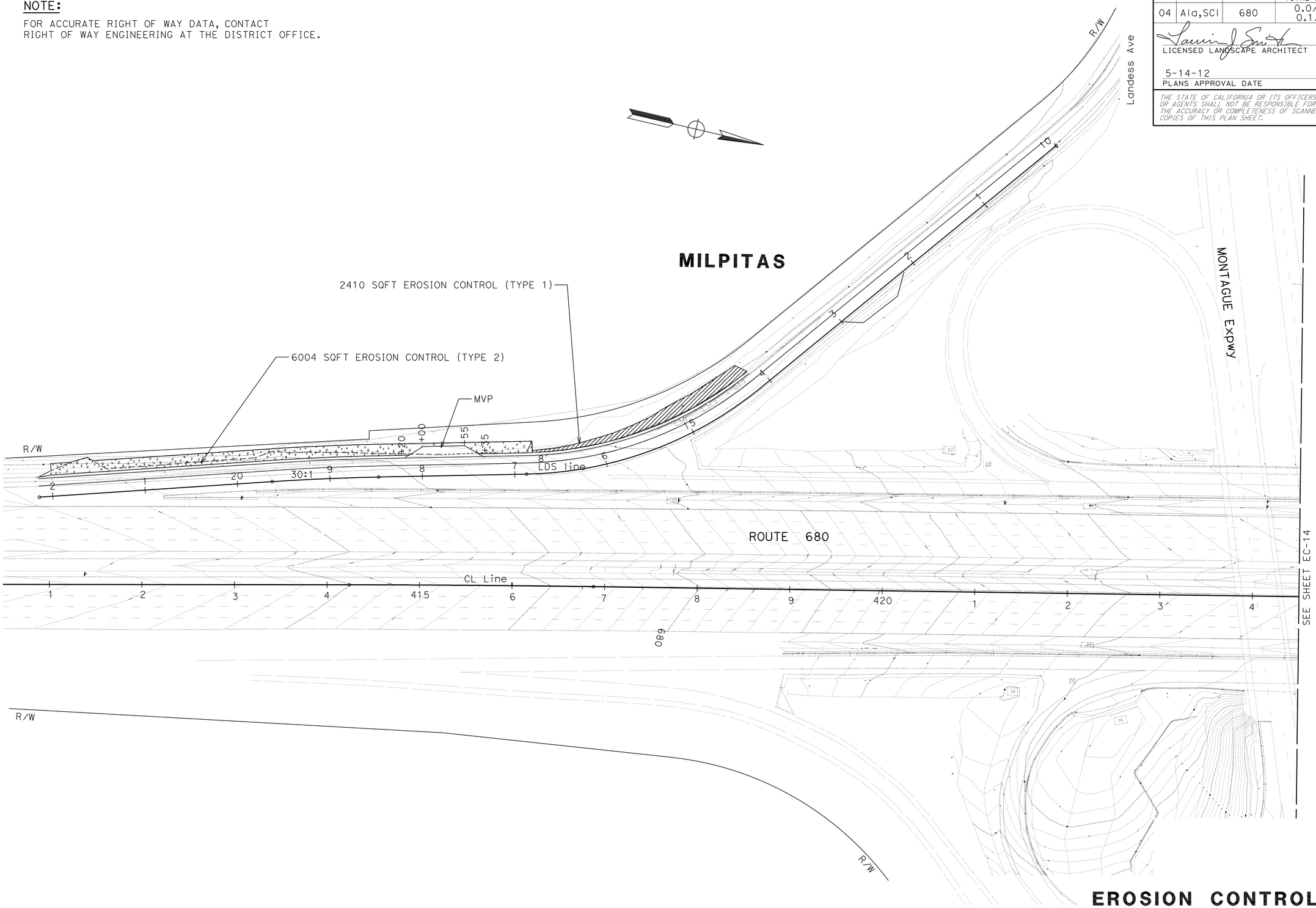

EROSION CONTROL PLAN

SCALE: 1" = 50'

EC-13

APPROVED FOR EROSION CONTROL WORK ONLY

FOR NOTES, ABBREVIATIONS AND LEGEND, SEE SHEET EC-1

STATE OF CALIFORNIA - DEPARTMENT OF TRANSPORTATION
Caltrans®
WATER QUALITY

SENIOR LANDSCAPE ARCHITECT: DAVID W YAM

CALCULATED-DESIGNED BY: LAURIE J SMITH
CHECKED BY: ALEX MC DONALD

REVISED BY
DATE REVISED

LAST REVISION 02-09-12
DATE PLOTTED => 14-MAY-2012
TIME PLOTTED => 10:33

Dist	COUNTY	ROUTE	POST MILES TOTAL PROJECT	SHEET No.	TOTAL SHEETS
04	Ala,SCl	680	0.0/0.1, 0.1/9.9	45	319

LICENSED LANDSCAPE ARCHITECT

5-14-12
PLANS APPROVAL DATE

LICENSED LANDSCAPE ARCHITECT
Laurie J. Smith No. 4262
Signature
8-31-12
Renewal Date
Date
STATE OF CALIFORNIA

THE STATE OF CALIFORNIA OR ITS OFFICERS OR AGENTS SHALL NOT BE RESPONSIBLE FOR THE ACCURACY OR COMPLETENESS OF SCANNED COPIES OF THIS PLAN SHEET.

NOTE:

FOR ACCURATE RIGHT OF WAY DATA, CONTACT RIGHT OF WAY ENGINEERING AT THE DISTRICT OFFICE.

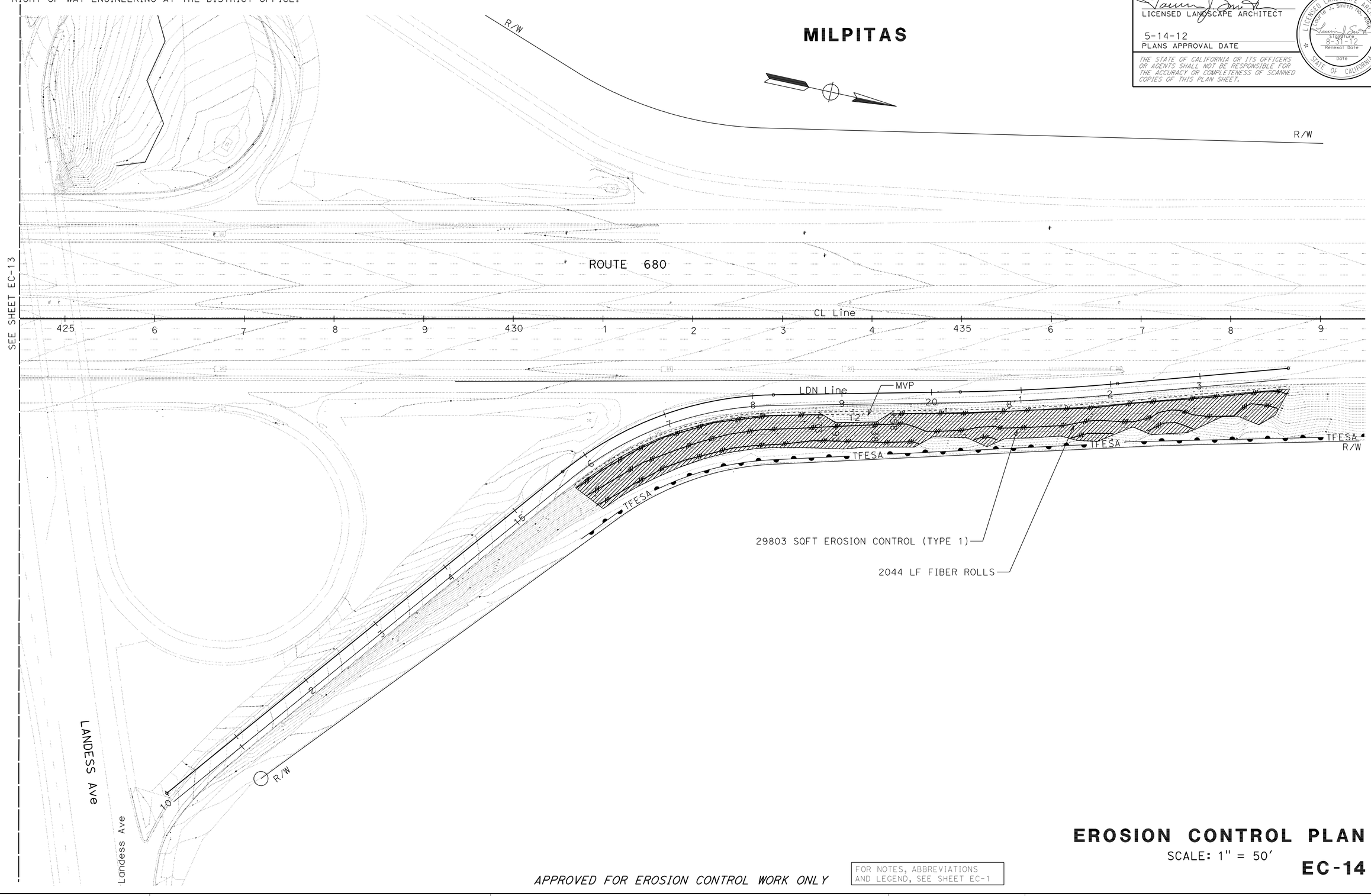

EROSION CONTROL PLAN

SCALE: 1" = 50'

EC-14

APPROVED FOR EROSION CONTROL WORK ONLY

FOR NOTES, ABBREVIATIONS AND LEGEND, SEE SHEET EC-1

STATE OF CALIFORNIA - DEPARTMENT OF TRANSPORTATION
Caltrans®
WATER QUALITY

SENIOR LANDSCAPE ARCHITECT: DAVID W YAM

CALCULATED-DESIGNED BY: LAURIE J SMITH
CHECKED BY: ALEX MC DONALD

REVISED BY
DATE REVISED

LAST REVISION 02-09-12
DATE PLOTTED => 14-MAY-2012
TIME PLOTTED => 10:33

Dist	COUNTY	ROUTE	POST MILES TOTAL PROJECT	SHEET No.	TOTAL SHEETS
04	Ala,SCl	680	0.0/0.1, 0.1/9.9	46	319

LICENSED LANDSCAPE ARCHITECT

5-14-12
PLANS APPROVAL DATE

LICENSED LANDSCAPE ARCHITECT
Laurie J. Smith No. 4262
Signature
8-31-12
Renewal Date
Date
STATE OF CALIFORNIA

THE STATE OF CALIFORNIA OR ITS OFFICERS OR AGENTS SHALL NOT BE RESPONSIBLE FOR THE ACCURACY OR COMPLETENESS OF SCANNED COPIES OF THIS PLAN SHEET.

NOTE:

FOR ACCURATE RIGHT OF WAY DATA, CONTACT RIGHT OF WAY ENGINEERING AT THE DISTRICT OFFICE.

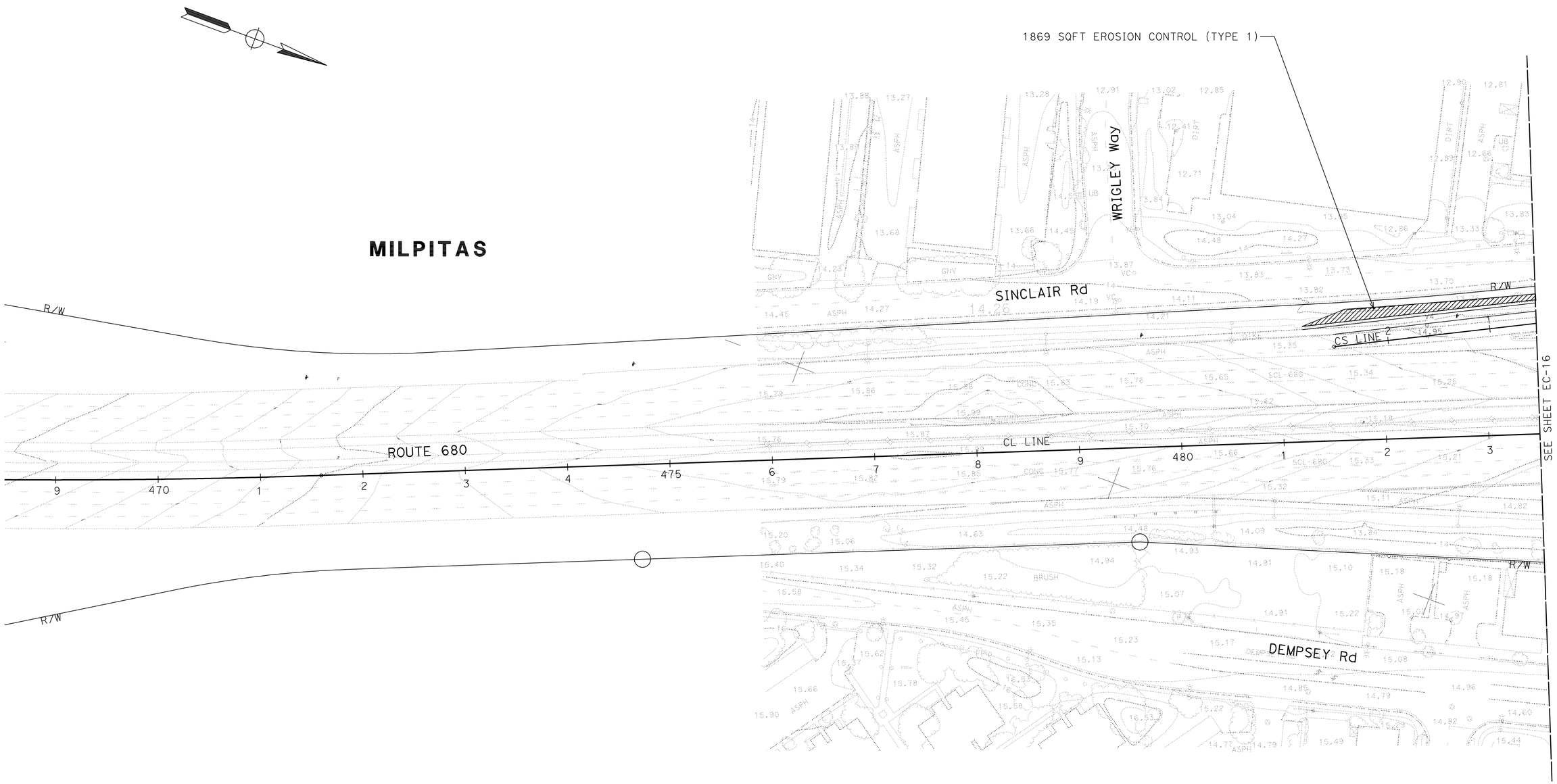

EROSION CONTROL PLAN

SCALE: 1" = 50'

EC-15

APPROVED FOR EROSION CONTROL WORK ONLY

FOR NOTES, ABBREVIATIONS AND LEGEND, SEE SHEET EC-1

STATE OF CALIFORNIA - DEPARTMENT OF TRANSPORTATION
Caltrans
WATER QUALITY

SENIOR LANDSCAPE ARCHITECT: DAVID W YAM

CALCULATED-DESIGNED BY: LAURIE J SMITH
CHECKED BY: ALEX MC DONALD

REVISED BY | DATE REVISED

LAST REVISION 02-09-12
DATE PLOTTED => 14-MAY-2012
TIME PLOTTED => 10:33

Dist	COUNTY	ROUTE	POST MILES TOTAL PROJECT	SHEET No.	TOTAL SHEETS
04	Ala,SCl	680	0.0/0.1, 0.1/9.9	47	319

LICENSED LANDSCAPE ARCHITECT

5-14-12
PLANS APPROVAL DATE

LICENSED LANDSCAPE ARCHITECT
Laurie J. Smith No. 4262
Signature
8-31-12
Renewal Date
Date
STATE OF CALIFORNIA

THE STATE OF CALIFORNIA OR ITS OFFICERS OR AGENTS SHALL NOT BE RESPONSIBLE FOR THE ACCURACY OR COMPLETENESS OF SCANNED COPIES OF THIS PLAN SHEET.

NOTE:

FOR ACCURATE RIGHT OF WAY DATA, CONTACT RIGHT OF WAY ENGINEERING AT THE DISTRICT OFFICE.

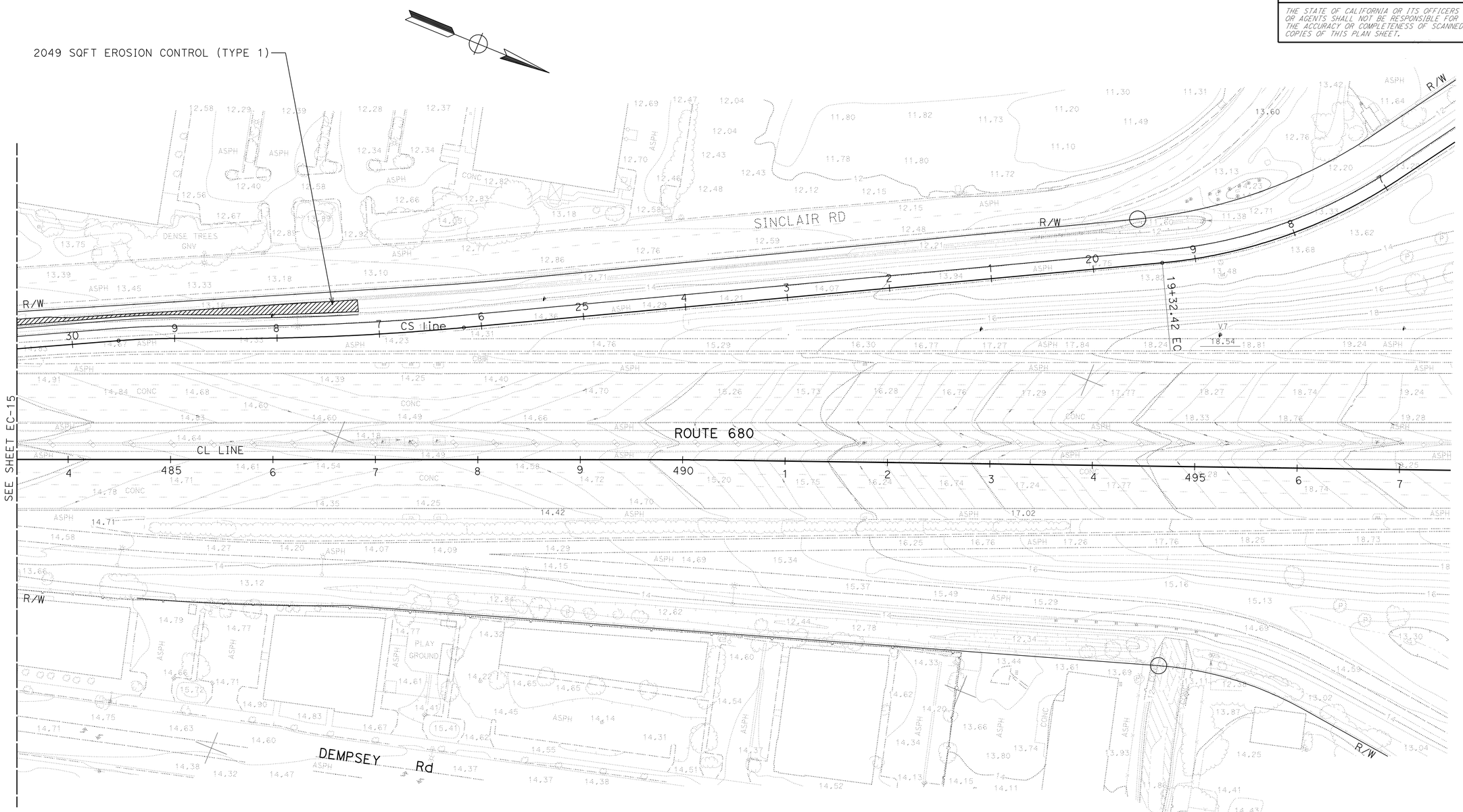

EROSION CONTROL PLAN

SCALE: 1" = 50'

EC-16

APPROVED FOR EROSION CONTROL WORK ONLY

FOR NOTES, ABBREVIATIONS AND LEGEND, SEE SHEET EC-1

STATE OF CALIFORNIA - DEPARTMENT OF TRANSPORTATION
Caltrans
WATER QUALITY
SENIOR LANDSCAPE ARCHITECT: DAVID W YAM
CALCULATED-DESIGNED BY: LAURIE J SMITH
CHECKED BY: ALEX MC DONALD
REVISED BY
DATE REVISED

LAST REVISION 02-09-12
DATE PLOTTED => 14-MAY-2012
TIME PLOTTED => 10:33

Dist	COUNTY	ROUTE	POST MILES TOTAL PROJECT	SHEET No.	TOTAL SHEETS
04	Ala,SCl	680	0.0/0.1, 0.1/9.9	48	319

LICENSED LANDSCAPE ARCHITECT

5-14-12
PLANS APPROVAL DATE

LICENSED LANDSCAPE ARCHITECT
Laurie J. Smith No. 2462
Signature
8-31-12
Renewal Date
Date
STATE OF CALIFORNIA

THE STATE OF CALIFORNIA OR ITS OFFICERS OR AGENTS SHALL NOT BE RESPONSIBLE FOR THE ACCURACY OR COMPLETENESS OF SCANNED COPIES OF THIS PLAN SHEET.

NOTE:

FOR ACCURATE RIGHT OF WAY DATA, CONTACT RIGHT OF WAY ENGINEERING AT THE DISTRICT OFFICE.

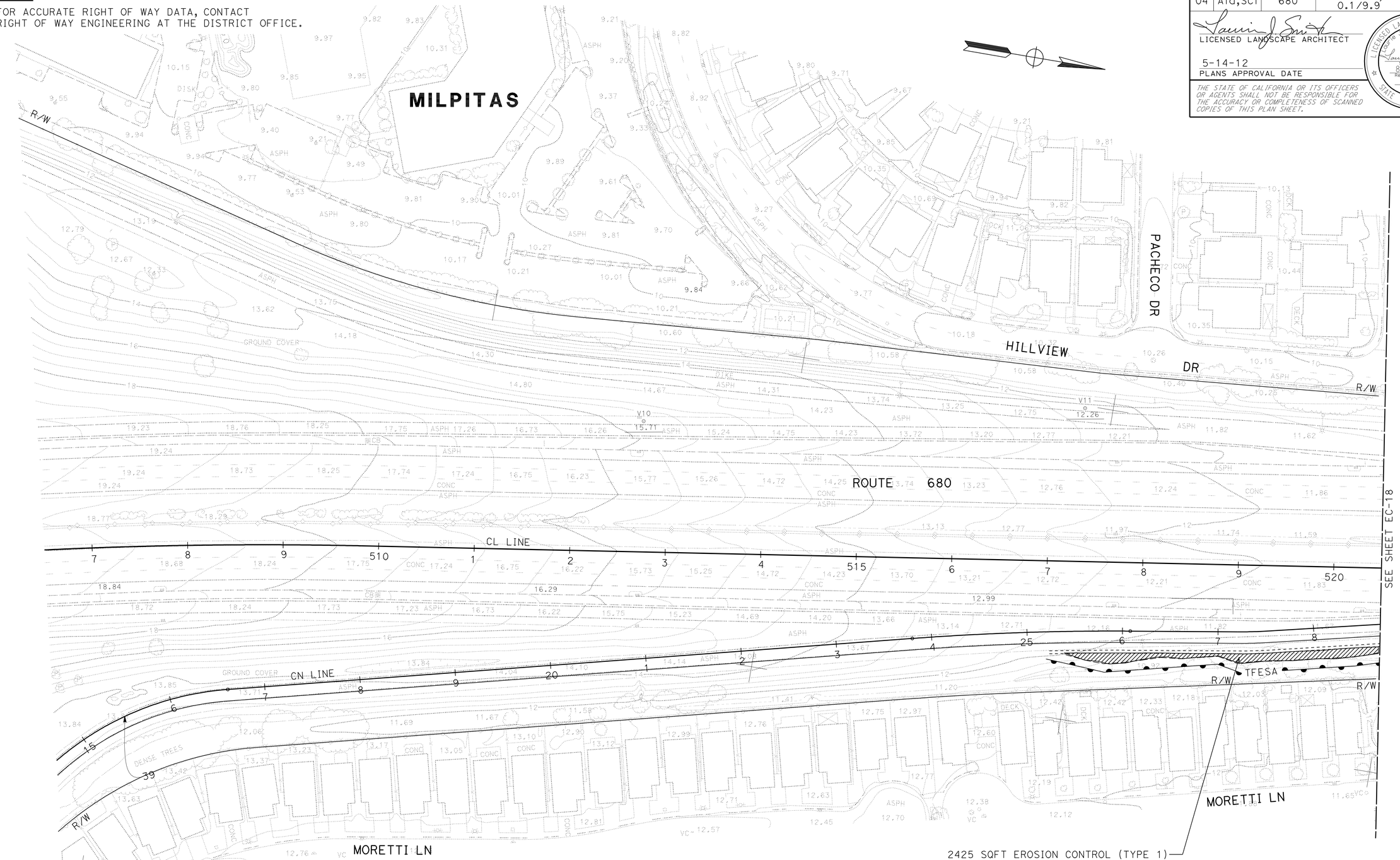

EROSION CONTROL PLAN

SCALE: 1" = 50'

EC-17

APPROVED FOR EROSION CONTROL WORK ONLY

FOR NOTES, ABBREVIATIONS AND LEGEND, SEE SHEET EC-1

STATE OF CALIFORNIA - DEPARTMENT OF TRANSPORTATION
Caltrans
WATER QUALITY

SENIOR LANDSCAPE ARCHITECT: DAVID W YAM

CALCULATED-DESIGNED BY: LAURIE J SMITH
CHECKED BY: ALEX MC DONALD

REVISED BY
DATE REVISED

LAST REVISION 02-09-12
DATE PLOTTED => 14-MAY-2012
TIME PLOTTED => 0:33

Dist	COUNTY	ROUTE	POST MILES TOTAL PROJECT	SHEET No.	TOTAL SHEETS
04	Ala,SCl	680	0.0/0.1, 0.1/9.9	49	319

LICENSED LANDSCAPE ARCHITECT

5-14-12
PLANS APPROVAL DATE

LICENSED LANDSCAPE ARCHITECT
Laurie J. Smith No. 4262
Signature
8-31-12
Renewal Date
Date
STATE OF CALIFORNIA

THE STATE OF CALIFORNIA OR ITS OFFICERS OR AGENTS SHALL NOT BE RESPONSIBLE FOR THE ACCURACY OR COMPLETENESS OF SCANNED COPIES OF THIS PLAN SHEET.

NOTE:

FOR ACCURATE RIGHT OF WAY DATA, CONTACT RIGHT OF WAY ENGINEERING AT THE DISTRICT OFFICE.

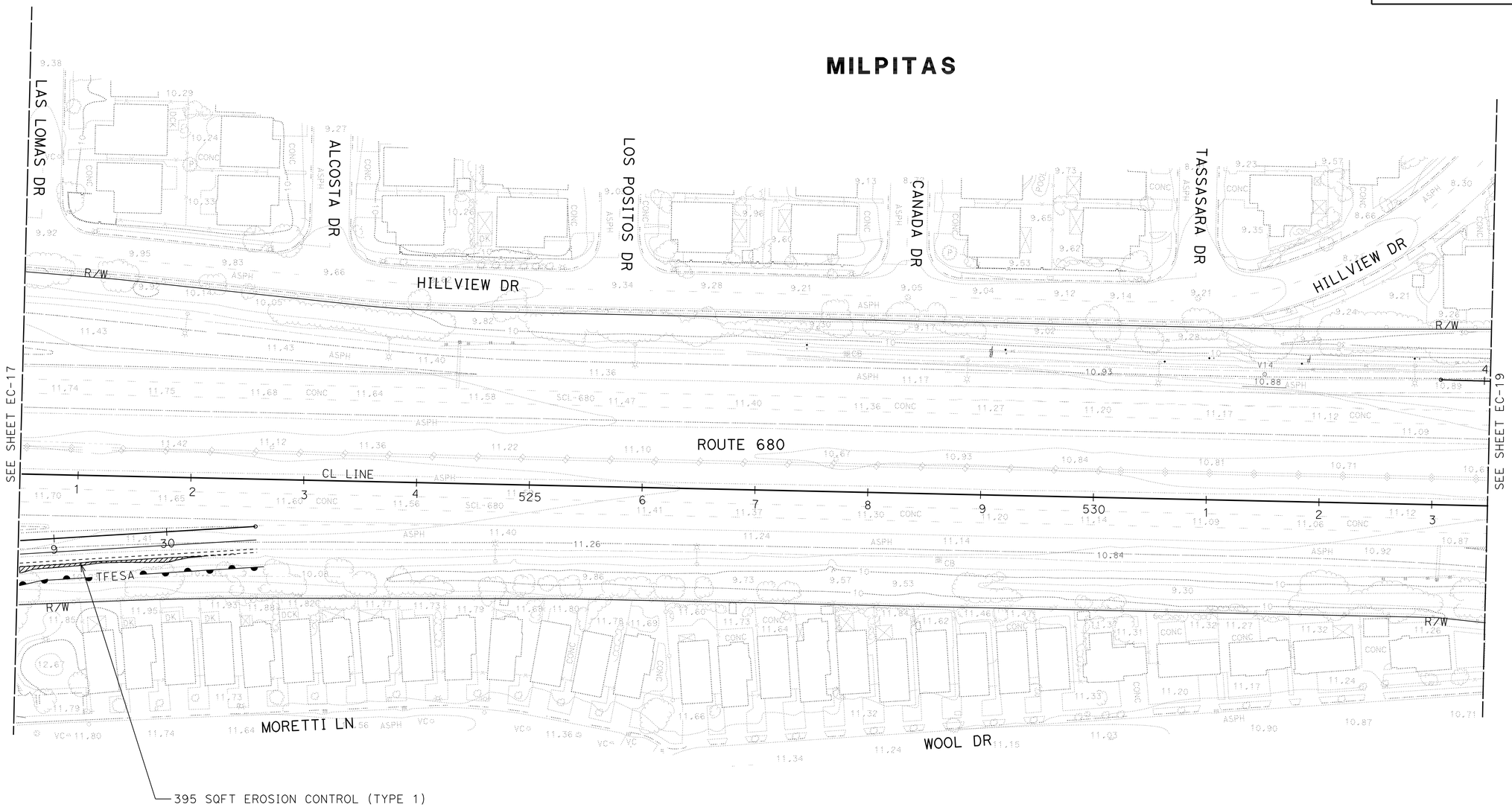

EROSION CONTROL PLAN

SCALE: 1" = 50'

EC-18

APPROVED FOR EROSION CONTROL WORK ONLY

FOR NOTES, ABBREVIATIONS AND LEGEND, SEE SHEET EC-1

STATE OF CALIFORNIA - DEPARTMENT OF TRANSPORTATION
Caltrans®
WATER QUALITY

SENIOR LANDSCAPE ARCHITECT: DAVID W YAM

CALCULATED-DESIGNED BY: LAURIE J SMITH
CHECKED BY: ALEX MC DONALD

REVISED BY
DATE REVISED

LAST REVISION 02-09-12
DATE PLOTTED => 14-MAY-2012
TIME PLOTTED => 10:33

Dist	COUNTY	ROUTE	POST MILES TOTAL PROJECT	SHEET No.	TOTAL SHEETS
04	Ala,SCl	680	0.0/0.1, 0.1/9.9	50	319

LICENSED LANDSCAPE ARCHITECT

5-14-12
PLANS APPROVAL DATE

LICENSED LANDSCAPE ARCHITECT
Laurie J. Smith No. 4262
Signature
8-31-12
Renewal Date
Date
STATE OF CALIFORNIA

THE STATE OF CALIFORNIA OR ITS OFFICERS OR AGENTS SHALL NOT BE RESPONSIBLE FOR THE ACCURACY OR COMPLETENESS OF SCANNED COPIES OF THIS PLAN SHEET.

NOTE:

FOR ACCURATE RIGHT OF WAY DATA, CONTACT RIGHT OF WAY ENGINEERING AT THE DISTRICT OFFICE.

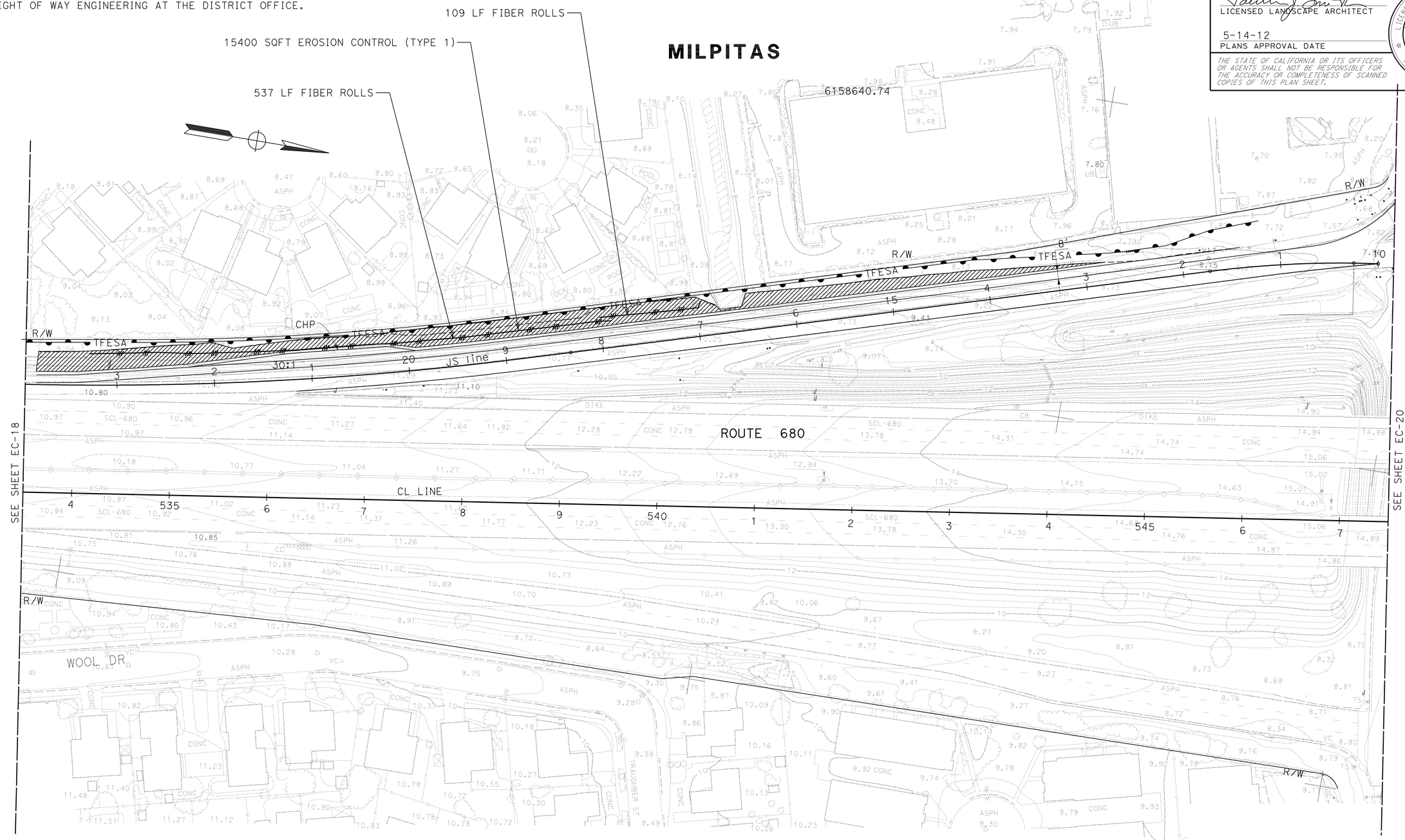

EROSION CONTROL PLAN

SCALE: 1" = 50'

EC-19

APPROVED FOR EROSION CONTROL WORK ONLY

FOR NOTES, ABBREVIATIONS AND LEGEND, SEE SHEET EC-1

STATE OF CALIFORNIA - DEPARTMENT OF TRANSPORTATION
Caltrans®
WATER QUALITY

SENIOR LANDSCAPE ARCHITECT: DAVID W YAM

CALCULATED-DESIGNED BY: LAURIE J SMITH
CHECKED BY: ALEX MC DONALD

REVISED BY
DATE REVISED

LAST REVISION 02-09-12
DATE PLOTTED => 14-MAY-2012
TIME PLOTTED => 10:34

Dist	COUNTY	ROUTE	POST MILES TOTAL PROJECT	SHEET No.	TOTAL SHEETS
04	Ala,SCl	680	0.0/0.1, 0.1/9.9	51	319

LICENSED LANDSCAPE ARCHITECT

5-14-12
PLANS APPROVAL DATE

LICENSED LANDSCAPE ARCHITECT
Laurie J. Smith No. 3062
Signature
8-31-12
Renewal Date
Date
STATE OF CALIFORNIA

THE STATE OF CALIFORNIA OR ITS OFFICERS OR AGENTS SHALL NOT BE RESPONSIBLE FOR THE ACCURACY OR COMPLETENESS OF SCANNED COPIES OF THIS PLAN SHEET.

NOTE:

FOR ACCURATE RIGHT OF WAY DATA, CONTACT RIGHT OF WAY ENGINEERING AT THE DISTRICT OFFICE.

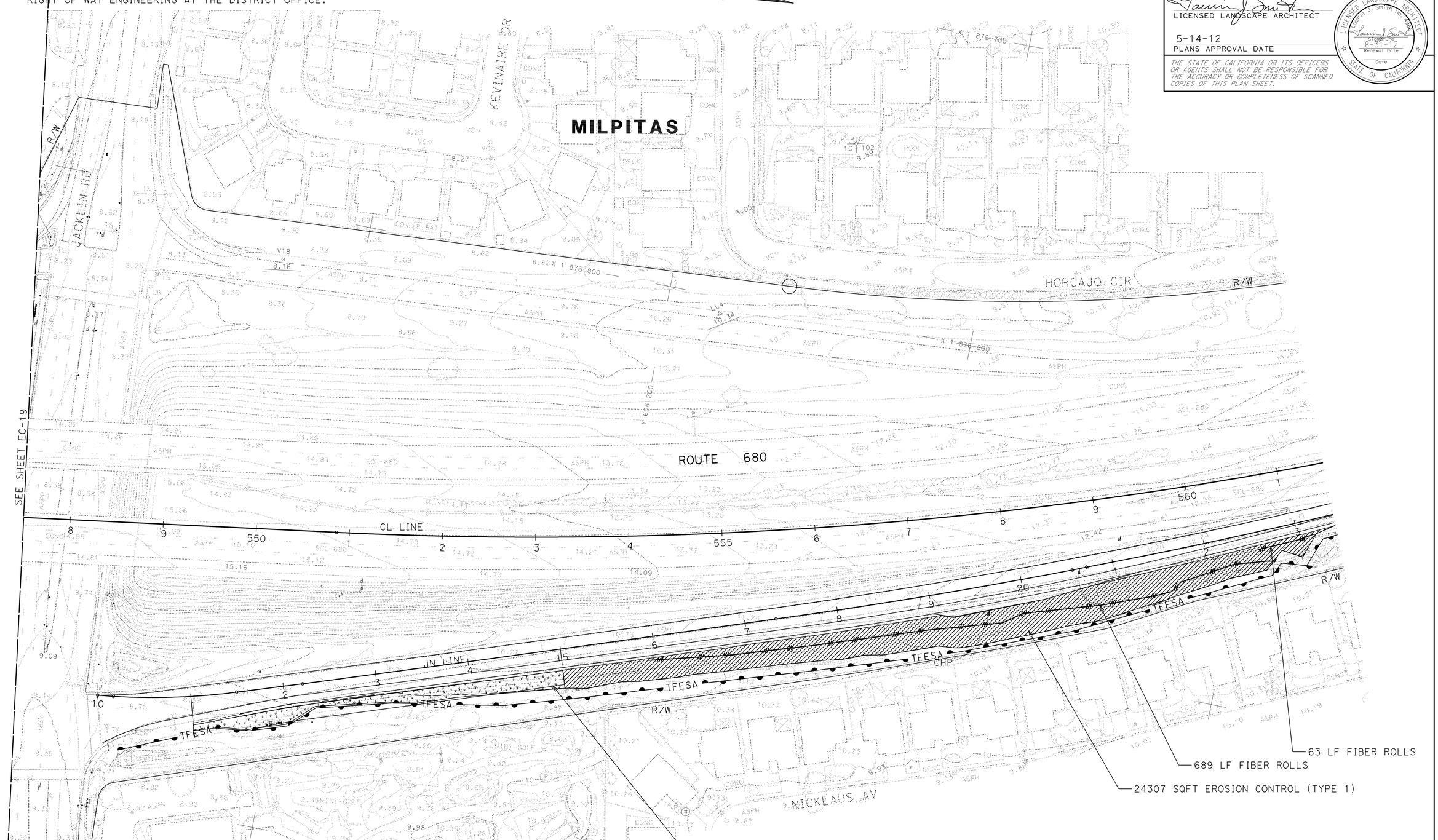

APPROVED FOR EROSION CONTROL WORK ONLY

FOR NOTES, ABBREVIATIONS AND LEGEND, SEE SHEET EC-1

EROSION CONTROL PLAN

SCALE: 1" = 50'

EC-20

STATE OF CALIFORNIA - DEPARTMENT OF TRANSPORTATION
Caltrans
WATER QUALITY

SENIOR LANDSCAPE ARCHITECT: DAVID W YAM

CALCULATED-DESIGNED BY: LAURIE J SMITH
CHECKED BY: ALEX MC DONALD

REVISED BY
DATE REVISED

LAST REVISION 02-09-12
DATE PLOTTED => 14-MAY-2012
TIME PLOTTED => 10:34

Dist	COUNTY	ROUTE	POST MILES TOTAL PROJECT	SHEET No.	TOTAL SHEETS
04	Ala,SCl	680	0.0/0.1, 0.1/9.9	52	319

LICENSED LANDSCAPE ARCHITECT

5-14-12
PLANS APPROVAL DATE

THE STATE OF CALIFORNIA OR ITS OFFICERS OR AGENTS SHALL NOT BE RESPONSIBLE FOR THE ACCURACY OR COMPLETENESS OF SCANNED COPIES OF THIS PLAN SHEET.

LICENSED LANDSCAPE ARCHITECT
Laurie J. Smith No. 4262
Signature
8-31-12
Renewal Date
Date
STATE OF CALIFORNIA

NOTE:

FOR ACCURATE RIGHT OF WAY DATA, CONTACT RIGHT OF WAY ENGINEERING AT THE DISTRICT OFFICE.

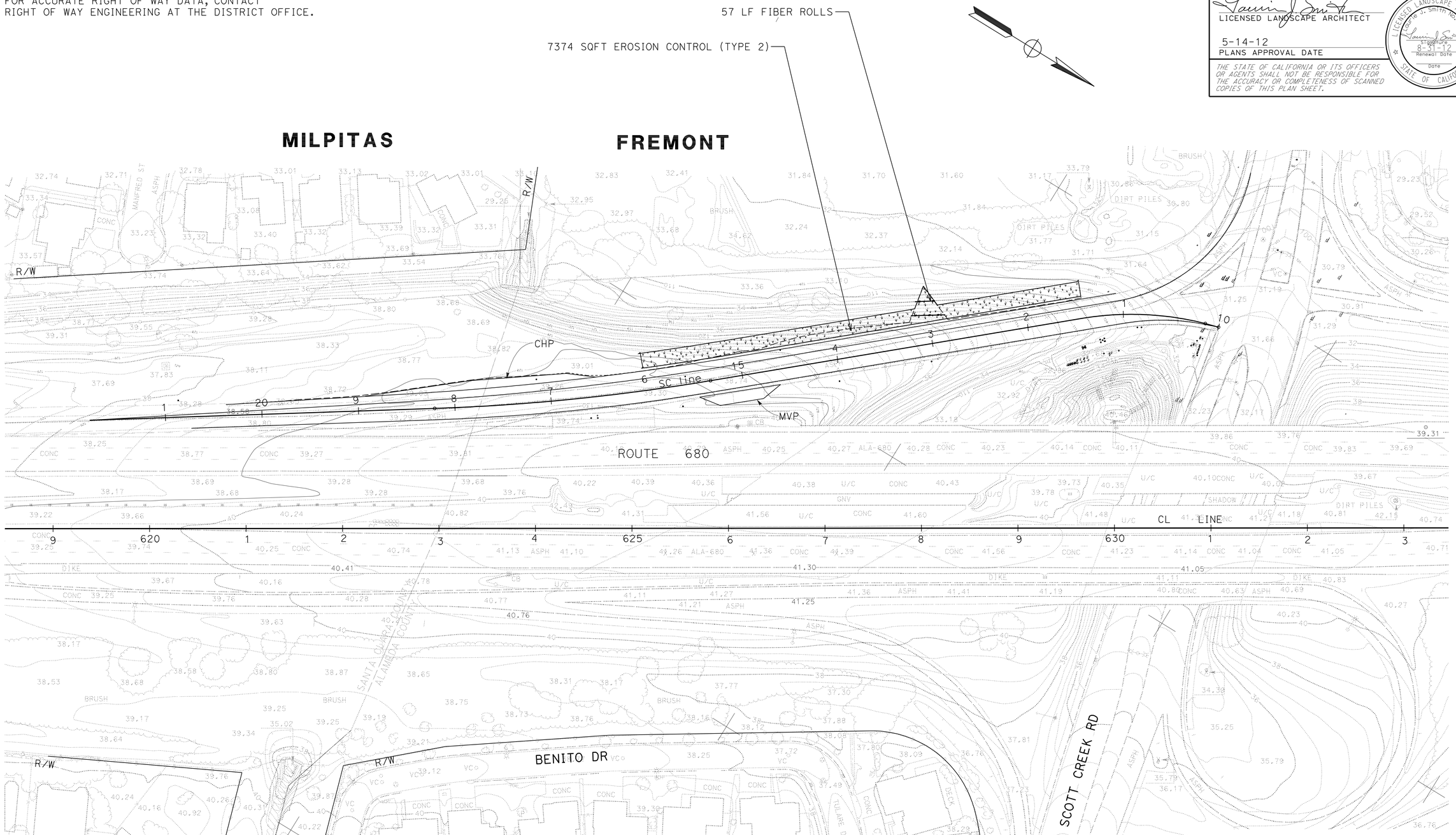

EROSION CONTROL PLAN

SCALE: 1" = 50'

EC-21

APPROVED FOR EROSION CONTROL WORK ONLY

FOR NOTES, ABBREVIATIONS AND LEGEND, SEE SHEET EC-1

STATE OF CALIFORNIA - DEPARTMENT OF TRANSPORTATION
Caltrans®
WATER QUALITY

SENIOR LANDSCAPE ARCHITECT: DAVID W YAM

CALCULATED-DESIGNED BY: LAURIE J SMITH
CHECKED BY: ALEX MC DONALD

REVISED BY | DATE REVISED

LAST REVISION 02-13-12 | DATE PLOTTED => 14-MAY-2012 | TIME PLOTTED => 10:34

BORDER LAST REVISED 7/2/2010 | USERNAME => s109858 | DGN FILE => 0400000426ge021.dgn | RELATIVE BORDER SCALE IS IN INCHES 0 1 2 3 | UNIT 0792 | PROJECT NUMBER & PHASE 04000004261

Dist	COUNTY	ROUTE	POST MILES TOTAL PROJECT	SHEET No.	TOTAL SHEETS
04	Ala,SCl	680	0.0/0.1, 0.1/9.9	53	319

LICENSED LANDSCAPE ARCHITECT

5-14-12
PLANS APPROVAL DATE

LICENSED LANDSCAPE ARCHITECT
Laurie J. Smith No. 4262
Signature
8-31-12
Renewal Date
Date
STATE OF CALIFORNIA

THE STATE OF CALIFORNIA OR ITS OFFICERS OR AGENTS SHALL NOT BE RESPONSIBLE FOR THE ACCURACY OR COMPLETENESS OF SCANNED COPIES OF THIS PLAN SHEET.

EROSION CONTROL QUANTITIES

SHEET No.	TYPE	AREA	EROSION CONTROL (COMPOST BLANKET)	COMPOST, INCORPORATE	MULCH	EROSION CONTROL (HYDROSEED)	FIBER ROLL
		SQFT	CY	SQYD	CY	SQFT	LF
EC-1	1	3564	2	-	-	3564	-
EC-2	1	12742	7	-	-	12742	976
EC-3	1	10796	5	-	-	10796	654
EC-4	1	48520	19	-	5	48520	2188
EC-5	1	11604	5	-	-	11604	1181
EC-6	1	11980	9	-	-	11980	1037
EC-7	1	3149	2	-	-	3149	-
EC-7	2	2754	-	306	-	2754	-
EC-8	1	6022	3	-	-	6022	589
EC-8	2	4449	-	494	-	4449	-
EC-9	1	2735	2	-	-	2735	-
EC-10	1	12027	5	-	-	12027	1658
EC-11	-	-	-	-	12	-	-
EC-12	1	5420	2	-	6	5420	-
EC-13	2	6004	-	667	-	6004	-
EC-13	1	2410	1	-	-	2410	-
EC-14	1	29803	12	-	-	29803	2044
EC-15	1	1869	1	-	-	1869	-
EC-16	1	2049	1	-	-	2049	-
EC-17	1	2425	1	-	-	2425	-
EC-18	1	395	1	-	-	395	-
EC-19	1	15400	6	-	-	15400	646
EC-20	2	5481	-	609	-	5481	-
EC-20	1	24307	10	-	-	24307	752
EC-21	2	7374	-	819	-	7374	57
TOTAL			94	2895	23	233279	11782

STATE OF CALIFORNIA - DEPARTMENT OF TRANSPORTATION
Caltrans®
WATER QUALITY

SENIOR LANDSCAPE ARCHITECT
DAVID W YAM

CALCULATED-DESIGNED BY
LAURIE J SMITH

CHECKED BY
ALEX MC DONALD

REVISED BY

DATE REVISED

EROSION CONTROL QUANTITIES
ECQ-1

LAST REVISION 02-13-12
DATE PLOTTED => 14-MAY-2012
TIME PLOTTED => 10:34

Dist	COUNTY	ROUTE	POST MILES TOTAL PROJECT	SHEET No.	TOTAL SHEETS
04	Ala,SCl	680	0.0/0.1, 0.1/9.9	54	319

REGISTERED CIVIL ENGINEER 02/10/12 DATE

5-14-12
PLANS APPROVAL DATE

REGISTERED PROFESSIONAL ENGINEER HAN-BIN LIANG No. 48404 Exp. 6/30/12 CIVIL STATE OF CALIFORNIA

THE STATE OF CALIFORNIA OR ITS OFFICERS OR AGENTS SHALL NOT BE RESPONSIBLE FOR THE ACCURACY OR COMPLETENESS OF SCANNED COPIES OF THIS PLAN SHEET.

WRECO
1814 FRANKLIN STREET
SUITE 608
OAKLAND, CA 94612

CALTRANS
111 GRAND AVENUE
OAKLAND, CA 94612

NOTES:

1. FOR ACCURATE RIGHT OF WAY DATA, CONTACT RIGHT OF WAY ENGINEERING AT THE DISTRICT OFFICE.
2. STATION & OFFSET TIES TO DRAINAGE STRUCTURES ARE MEASURED PER DETAILS ON SHEET DD-1.
3. FOR FINISHED GRADE, SEE PROFILES, CONSTRUCTION DETAILS AND PAVEMENT ELEVATION SHEETS.
4. CONTRACTOR IS RESPONSIBLE TO PROVIDE POSITIVE DRAINAGE FROM ALL ROADWAY AREA AT ALL TIMES.
5. IF PRE-CAST DRAINAGE STRUCTURES ARE USED, THE CONTRACTOR SHALL FIELD VERIFY ALL EXISTING PIPES PRIOR TO CASTING STRUCTURES.

LEGEND:

- (No.) DRAINAGE SYSTEM No.
- (h) DRAINAGE UNIT
- AFES
- CAP INLET
- Exist INLET
- Exist STORM DRAIN
- GRADE TO DRAIN
- GUTTER/DITCH FLOW LINE
- RSP

ABBREVIATIONS:

CHP	CALIFORNIA HIGHWAY PATROL
ESA	ENVIRONMENTALLY SENSITIVE AREA
MVP	MAINTENANCE VEHICLE PULLOUT
SO	SIDE OPENING
TC	TOP OF COVER
w/	WITH

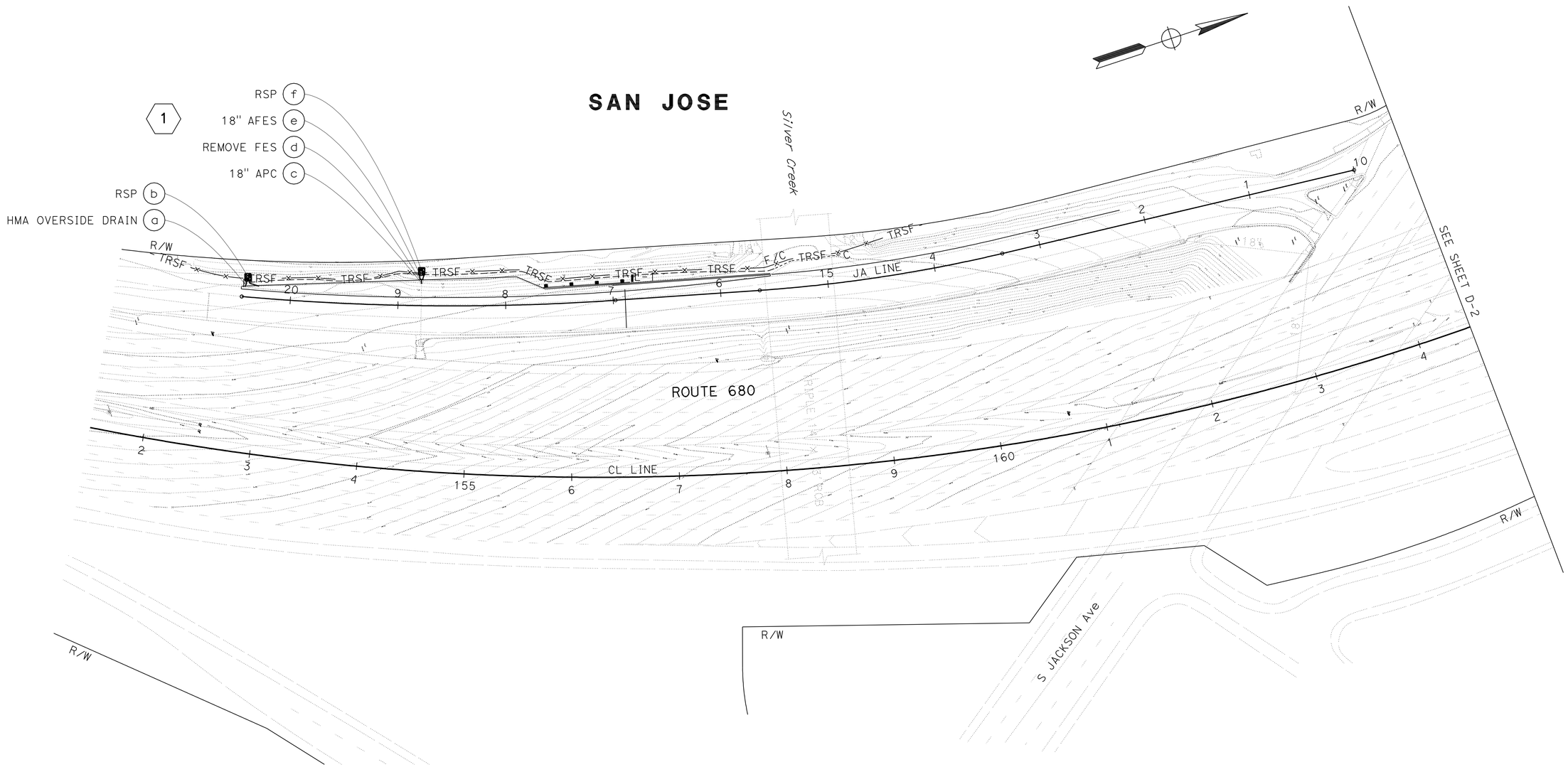

DRAINAGE PLAN

SCALE: 1" = 50'

D-1

APPROVED FOR DRAINAGE WORK ONLY

STATE OF CALIFORNIA - DEPARTMENT OF TRANSPORTATION
Caltrans

CONSULTANT FUNCTIONAL SUPERVISOR: HAN-BIN LIANG
CALCULATED-DESIGNED BY: IRENE LIU
CHECKED BY: STEVEN NAGATA
REVISED BY: IL
DATE REVISED: 04/24/12

LAST REVISION 04-24-12
DATE PLOTTED => 15-MAY-2012
TIME PLOTTED => 11:05

Dist	COUNTY	ROUTE	POST MILES TOTAL PROJECT	SHEET No.	TOTAL SHEETS
04	Ala,SCl	680	0.0/0.1, 0.1/9.9	55	319

REGISTERED CIVIL ENGINEER — DATE 02/10/12

5-14-12
PLANS APPROVAL DATE

REGISTERED PROFESSIONAL ENGINEER HAN-BIN LIANG No. 48404 Exp. 6/30/12 CIVIL STATE OF CALIFORNIA

THE STATE OF CALIFORNIA OR ITS OFFICERS OR AGENTS SHALL NOT BE RESPONSIBLE FOR THE ACCURACY OR COMPLETENESS OF SCANNED COPIES OF THIS PLAN SHEET.

WRECO
1814 FRANKLIN STREET
SUITE 608
OAKLAND, CA 94612

CALTRANS
111 GRAND AVENUE
OAKLAND, CA 94612

NOTE:

FOR ACCURATE RIGHT OF WAY DATA, CONTACT RIGHT OF WAY ENGINEERING AT THE DISTRICT OFFICE.

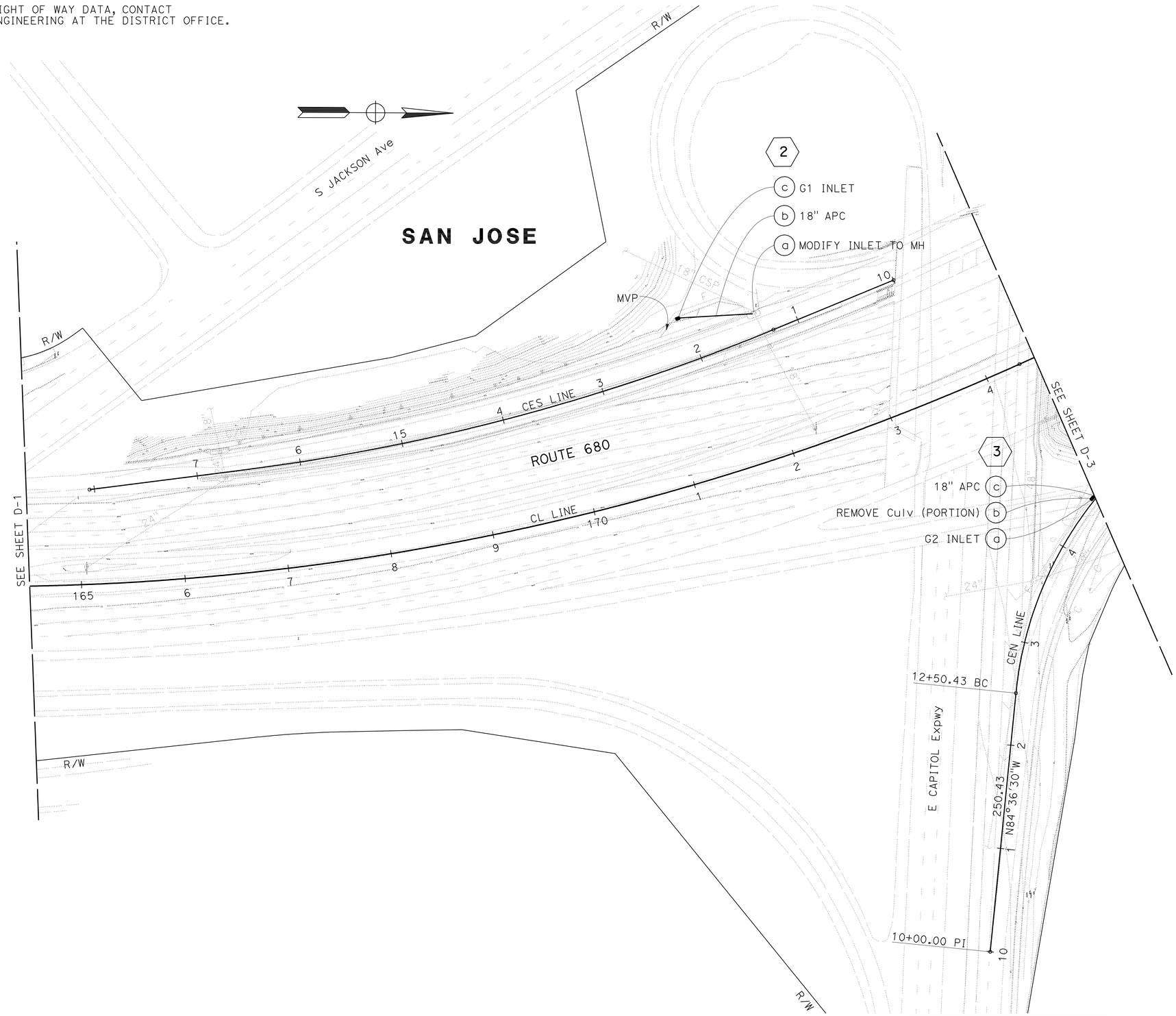

FOR NOTES, ABBREVIATIONS AND LEGEND, SEE SHEET D-1

APPROVED FOR DRAINAGE WORK ONLY

DRAINAGE PLAN

SCALE: 1" = 50'

D-2

STATE OF CALIFORNIA - DEPARTMENT OF TRANSPORTATION

Caltrans

CONSULTANT FUNCTIONAL SUPERVISOR: HAN-BIN LIANG

CALCULATED-DESIGNED BY: IRENE LIU

CHECKED BY: STEVEN NAGATA

REVISED BY: XX

DATE REVISED: 00/00/11

LAST REVISION 01-31-12

DATE PLOTTED => 14-MAY-2012
TIME PLOTTED => 08:51

Dist	COUNTY	ROUTE	POST MILES TOTAL PROJECT	SHEET No.	TOTAL SHEETS
04	Ala,SCl	680	0.0/0.1, 0.1/9.9	56	319

REGISTERED CIVIL ENGINEER 02/10/12 DATE

5-14-12
PLANS APPROVAL DATE

REGISTERED PROFESSIONAL ENGINEER HAN-BIN LIANG No. 48404 Exp. 6/30/12 CIVIL STATE OF CALIFORNIA

THE STATE OF CALIFORNIA OR ITS OFFICERS OR AGENTS SHALL NOT BE RESPONSIBLE FOR THE ACCURACY OR COMPLETENESS OF SCANNED COPIES OF THIS PLAN SHEET.

WRECO
1814 FRANKLIN STREET
SUITE 608
OAKLAND, CA 94612

CALTRANS
111 GRAND AVENUE
OAKLAND, CA 94612

NOTE:

FOR ACCURATE RIGHT OF WAY DATA, CONTACT RIGHT OF WAY ENGINEERING AT THE DISTRICT OFFICE.

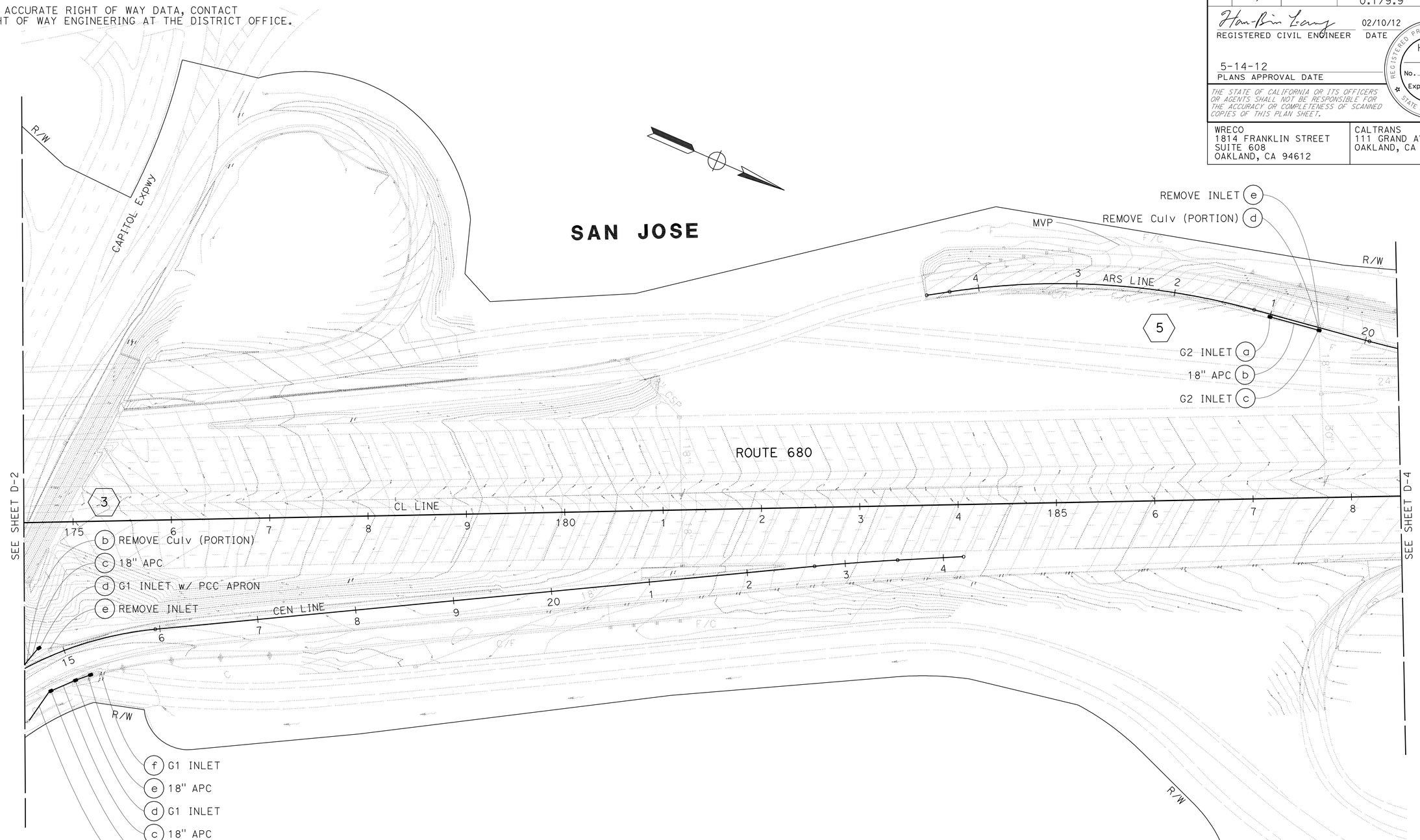

DRAINAGE PLAN

SCALE: 1" = 50'

FOR NOTES, ABBREVIATIONS AND LEGEND, SEE SHEET D-1

APPROVED FOR DRAINAGE WORK ONLY

D-3

STATE OF CALIFORNIA - DEPARTMENT OF TRANSPORTATION

Caltrans

CONSULTANT FUNCTIONAL SUPERVISOR: HAN-BIN LIANG

CALCULATED-DESIGNED BY: IRENE LIU

CHECKED BY: STEVEN NAGATA

REVISED BY: XX

DATE REVISED: 00/00/11

LAST REVISION 01-31-12

DATE PLOTTED => 14-MAY-2012
TIME PLOTTED => 08:51

Dist	COUNTY	ROUTE	POST MILES TOTAL PROJECT	SHEET No.	TOTAL SHEETS
04	Ala,SCl	680	0.0/0.1, 0.1/9.9	57	319

REGISTERED CIVIL ENGINEER — DATE: 02/10/12

5-14-12
PLANS APPROVAL DATE

REGISTERED PROFESSIONAL ENGINEER — HAN-BIN LIANG — No. 48404 — Exp. 6/30/12 — CIVIL — STATE OF CALIFORNIA

THE STATE OF CALIFORNIA OR ITS OFFICERS OR AGENTS SHALL NOT BE RESPONSIBLE FOR THE ACCURACY OR COMPLETENESS OF SCANNED COPIES OF THIS PLAN SHEET.

WRECO
1814 FRANKLIN STREET
SUITE 608
OAKLAND, CA 94612

CALTRANS
111 GRAND AVENUE
OAKLAND, CA 94612

NOTE:

FOR ACCURATE RIGHT OF WAY DATA, CONTACT RIGHT OF WAY ENGINEERING AT THE DISTRICT OFFICE.

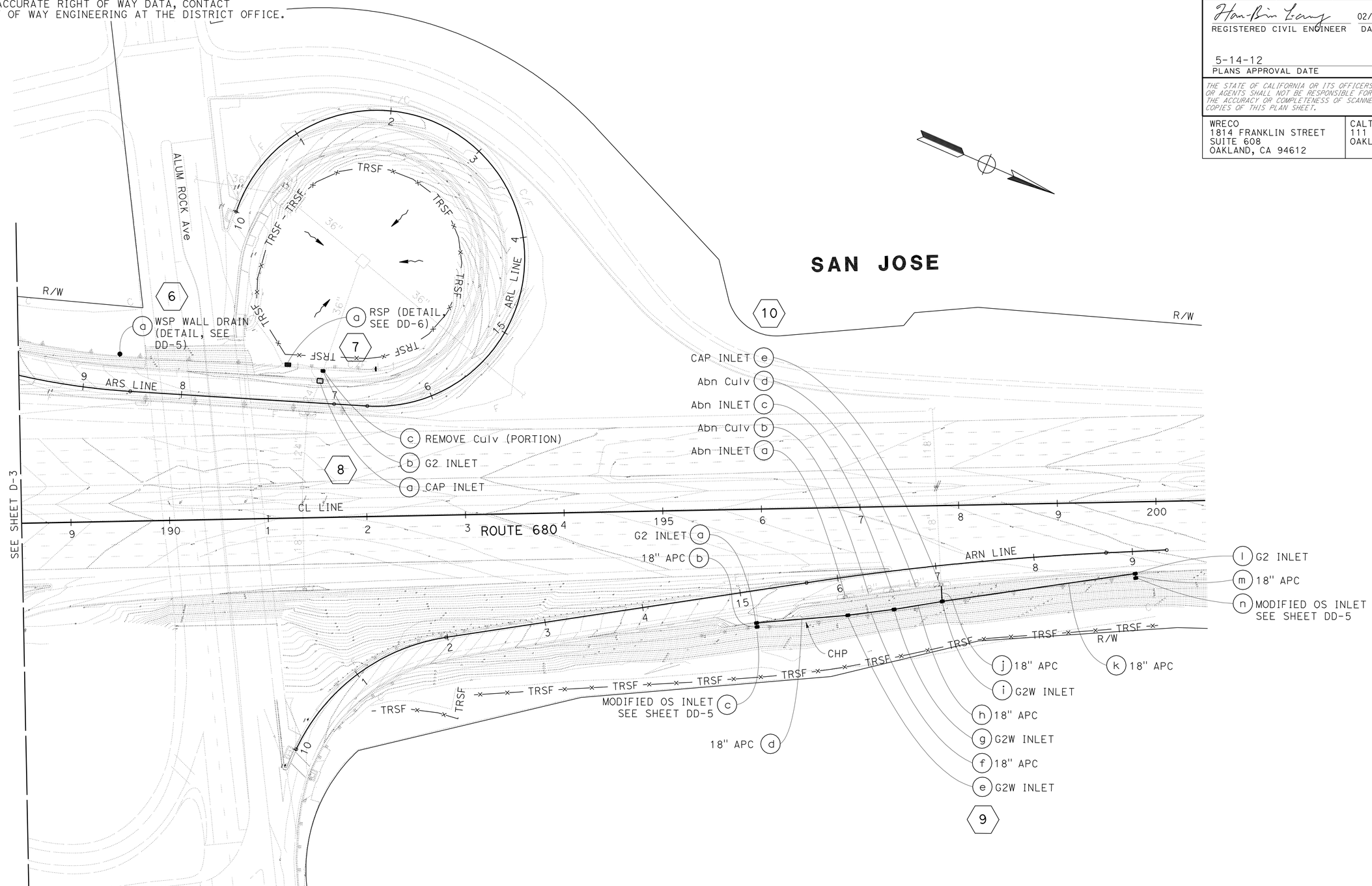

DRAINAGE PLAN

SCALE: 1" = 50'

APPROVED FOR DRAINAGE WORK ONLY

FOR NOTES, ABBREVIATIONS AND LEGEND, SEE SHEET D-1

D-4

REVISED BY	DATE REVISED
XX	00/00/11

IRENE LIU — STEVEN NAGATA — CALCULATED-DESIGNED BY — CHECKED BY

CONSULTANT FUNCTIONAL SUPERVISOR: HAN-BIN LIANG

STATE OF CALIFORNIA - DEPARTMENT OF TRANSPORTATION — Caltrans

LAST REVISION 01-31-12 — DATE PLOTTED => 15-MAY-2012 — TIME PLOTTED => 11:30

NOTE:

FOR ACCURATE RIGHT OF WAY DATA, CONTACT
RIGHT OF WAY ENGINEERING AT THE DISTRICT OFFICE.

Dist	COUNTY	ROUTE	POST MILES TOTAL PROJECT	SHEET No.	TOTAL SHEETS
04	Ala,SCl	680	0.0/0.1, 0.1/9.9	58	319

Han-Bin Liang 02/10/12
REGISTERED CIVIL ENGINEER DATE

5-14-12
PLANS APPROVAL DATE

REGISTERED PROFESSIONAL ENGINEER HAN-BIN LIANG No. 48404 Exp. 6/30/12 CIVIL STATE OF CALIFORNIA

THE STATE OF CALIFORNIA OR ITS OFFICERS OR AGENTS SHALL NOT BE RESPONSIBLE FOR THE ACCURACY OR COMPLETENESS OF SCANNED COPIES OF THIS PLAN SHEET.

WRECO
1814 FRANKLIN STREET
SUITE 608
OAKLAND, CA 94612

CALTRANS
111 GRAND AVENUE
OAKLAND, CA 94612

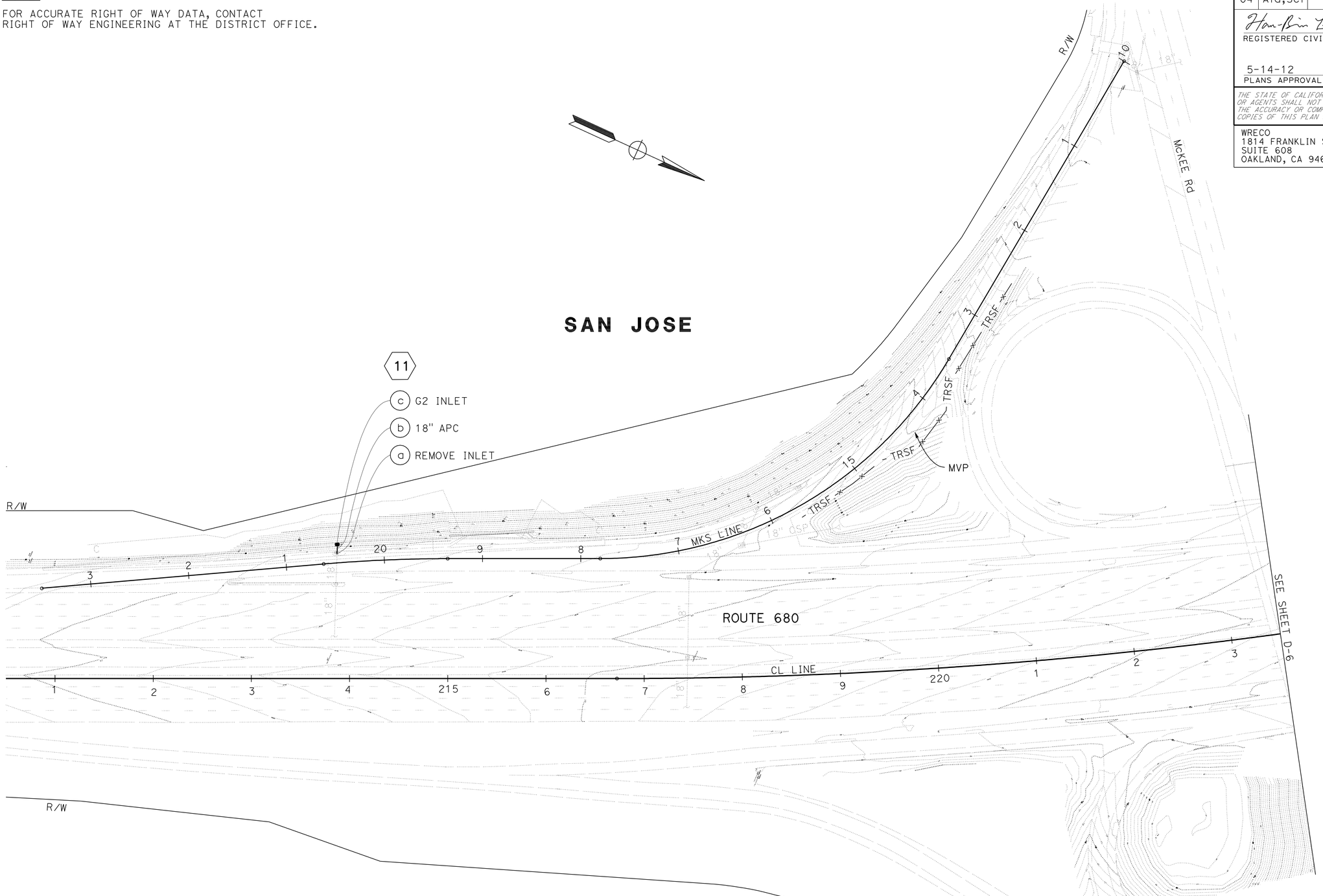

DRAINAGE PLAN

SCALE: 1" = 50'

FOR NOTES, ABBREVIATIONS AND LEGEND, SEE SHEET D-1

APPROVED FOR DRAINAGE WORK ONLY

D-5

REVISED BY	DATE REVISED
XX	00/00/11

IRENE LIU — CALCULATED-DESIGNED BY
STEVEN NAGATA — CHECKED BY
HAN-BIN LIANG — CONSULTANT FUNCTIONAL SUPERVISOR

STATE OF CALIFORNIA - DEPARTMENT OF TRANSPORTATION
Caltrans

LAST REVISION 01-31-12 | DATE PLOTTED => 15-MAY-2012 | TIME PLOTTED => 11:06

Dist	COUNTY	ROUTE	POST MILES TOTAL PROJECT	SHEET No.	TOTAL SHEETS
04	Ala,SCl	680	0.0/0.1, 0.1/9.9	59	319

REGISTERED CIVIL ENGINEER 02/10/12 DATE

5-14-12
PLANS APPROVAL DATE

REGISTERED PROFESSIONAL ENGINEER HAN-BIN LIANG No. 48404 Exp. 6/30/12 CIVIL STATE OF CALIFORNIA

THE STATE OF CALIFORNIA OR ITS OFFICERS OR AGENTS SHALL NOT BE RESPONSIBLE FOR THE ACCURACY OR COMPLETENESS OF SCANNED COPIES OF THIS PLAN SHEET.

WRECO
1814 FRANKLIN STREET
SUITE 608
OAKLAND, CA 94612

CALTRANS
111 GRAND AVENUE
OAKLAND, CA 94612

NOTE:

FOR ACCURATE RIGHT OF WAY DATA, CONTACT RIGHT OF WAY ENGINEERING AT THE DISTRICT OFFICE.

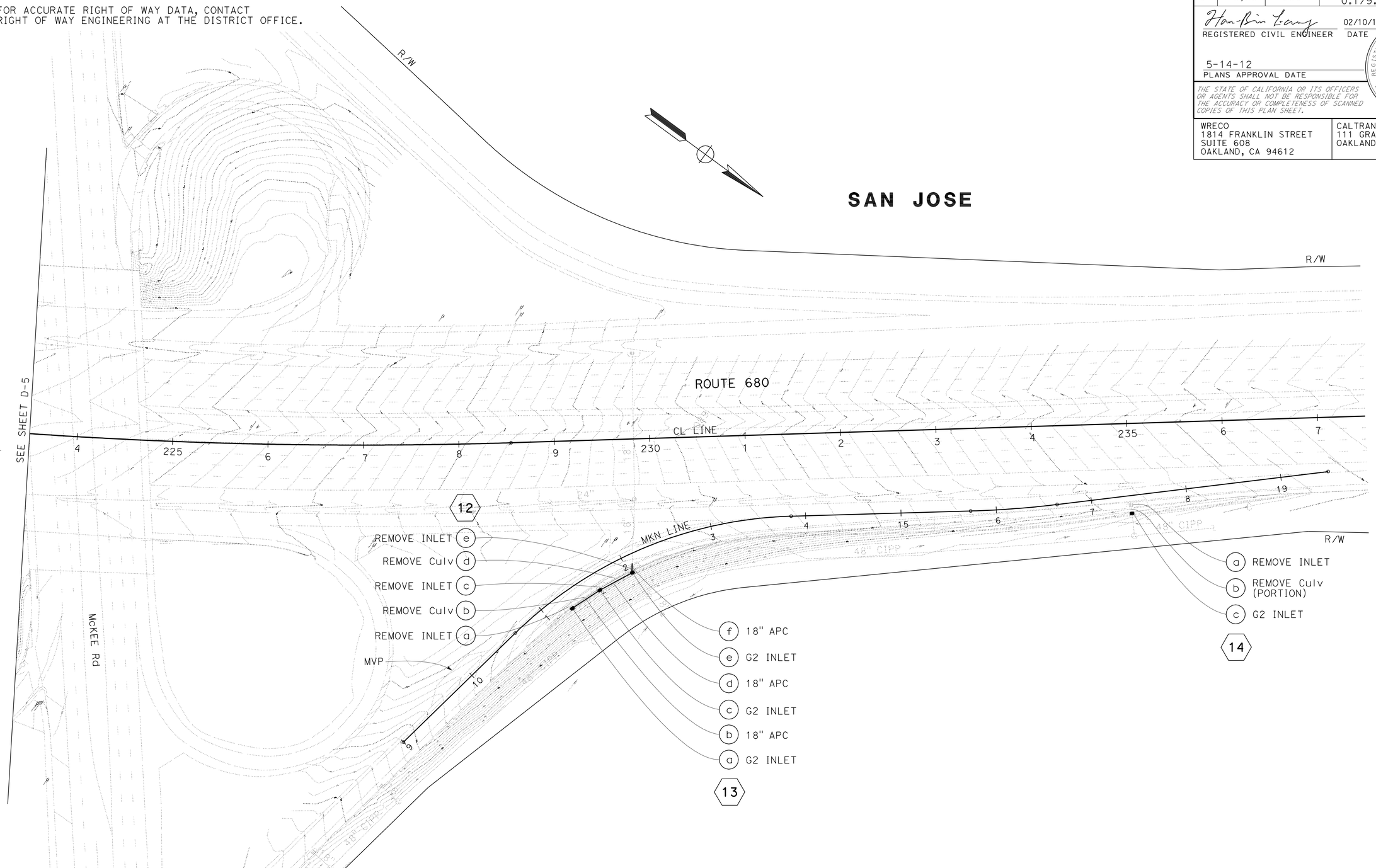

DRAINAGE PLAN

SCALE: 1" = 50'

FOR NOTES, ABBREVIATIONS AND LEGEND, SEE SHEET D-1

APPROVED FOR DRAINAGE WORK ONLY

D-6

STATE OF CALIFORNIA - DEPARTMENT OF TRANSPORTATION

Caltrans

CONSULTANT FUNCTIONAL SUPERVISOR: HAN-BIN LIANG

CALCULATED-DESIGNED BY: IRENE LIU

CHECKED BY: STEVEN NAGATA

REVISED BY: XX

DATE REVISED: 00/00/11

LAST REVISION 01-31-12

DATE PLOTTED => 15-MAY-2012
TIME PLOTTED => 11:06

Dist	COUNTY	ROUTE	POST MILES TOTAL PROJECT	SHEET No.	TOTAL SHEETS
04	Ala,SCl	680	0.0/0.1, 0.1/9.9	60	319

REGISTERED CIVIL ENGINEER 02/10/12 DATE

5-14-12
PLANS APPROVAL DATE

REGISTERED PROFESSIONAL ENGINEER HAN-BIN LIANG No. 48404 Exp. 6/30/12 CIVIL STATE OF CALIFORNIA

THE STATE OF CALIFORNIA OR ITS OFFICERS OR AGENTS SHALL NOT BE RESPONSIBLE FOR THE ACCURACY OR COMPLETENESS OF SCANNED COPIES OF THIS PLAN SHEET.

WRECO
1814 FRANKLIN STREET
SUITE 608
OAKLAND, CA 94612

CALTRANS
111 GRAND AVENUE
OAKLAND, CA 94612

NOTE:

FOR ACCURATE RIGHT OF WAY DATA, CONTACT RIGHT OF WAY ENGINEERING AT THE DISTRICT OFFICE.

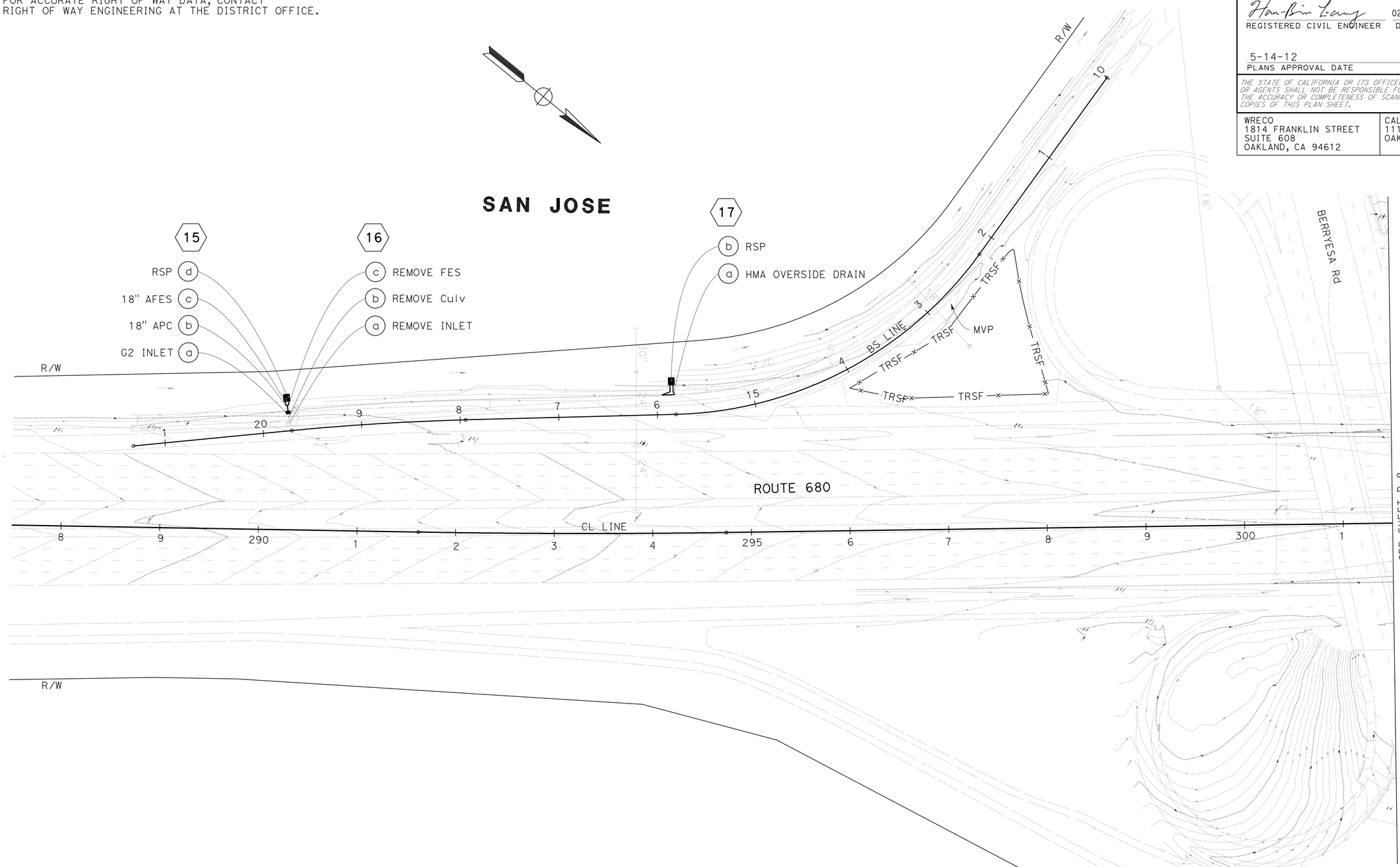

DRAINAGE PLAN

SCALE: 1" = 50'

FOR NOTES, ABBREVIATIONS AND LEGEND, SEE SHEET D-1

APPROVED FOR DRAINAGE WORK ONLY

D-7

STATE OF CALIFORNIA - DEPARTMENT OF TRANSPORTATION

Caltrans

CONSULTANT FUNCTIONAL SUPERVISOR: HAN-BIN LIANG

CALCULATED-DESIGNED BY: IRENE LIU

CHECKED BY: STEVEN NAGATA

REVISED BY: XX

DATE REVISED: 00/00/11

LAST REVISION 01-31-12

DATE PLOTTED => 15-MAY-2012
TIME PLOTTED => 11:06

Dist	COUNTY	ROUTE	POST MILES TOTAL PROJECT	SHEET No.	TOTAL SHEETS
04	Ala,SCl	680	0.0/0.1, 0.1/9.9	61	319

REGISTERED CIVIL ENGINEER — DATE: 02/10/12

5-14-12
PLANS APPROVAL DATE

REGISTERED PROFESSIONAL ENGINEER — HAN-BIN LIANG — No. 48404 — Exp. 6/30/12 — CIVIL — STATE OF CALIFORNIA

THE STATE OF CALIFORNIA OR ITS OFFICERS OR AGENTS SHALL NOT BE RESPONSIBLE FOR THE ACCURACY OR COMPLETENESS OF SCANNED COPIES OF THIS PLAN SHEET.

WRECO
1814 FRANKLIN STREET
SUITE 608
OAKLAND, CA 94612

CALTRANS
111 GRAND AVENUE
OAKLAND, CA 94612

NOTE:

FOR ACCURATE RIGHT OF WAY DATA, CONTACT RIGHT OF WAY ENGINEERING AT THE DISTRICT OFFICE.

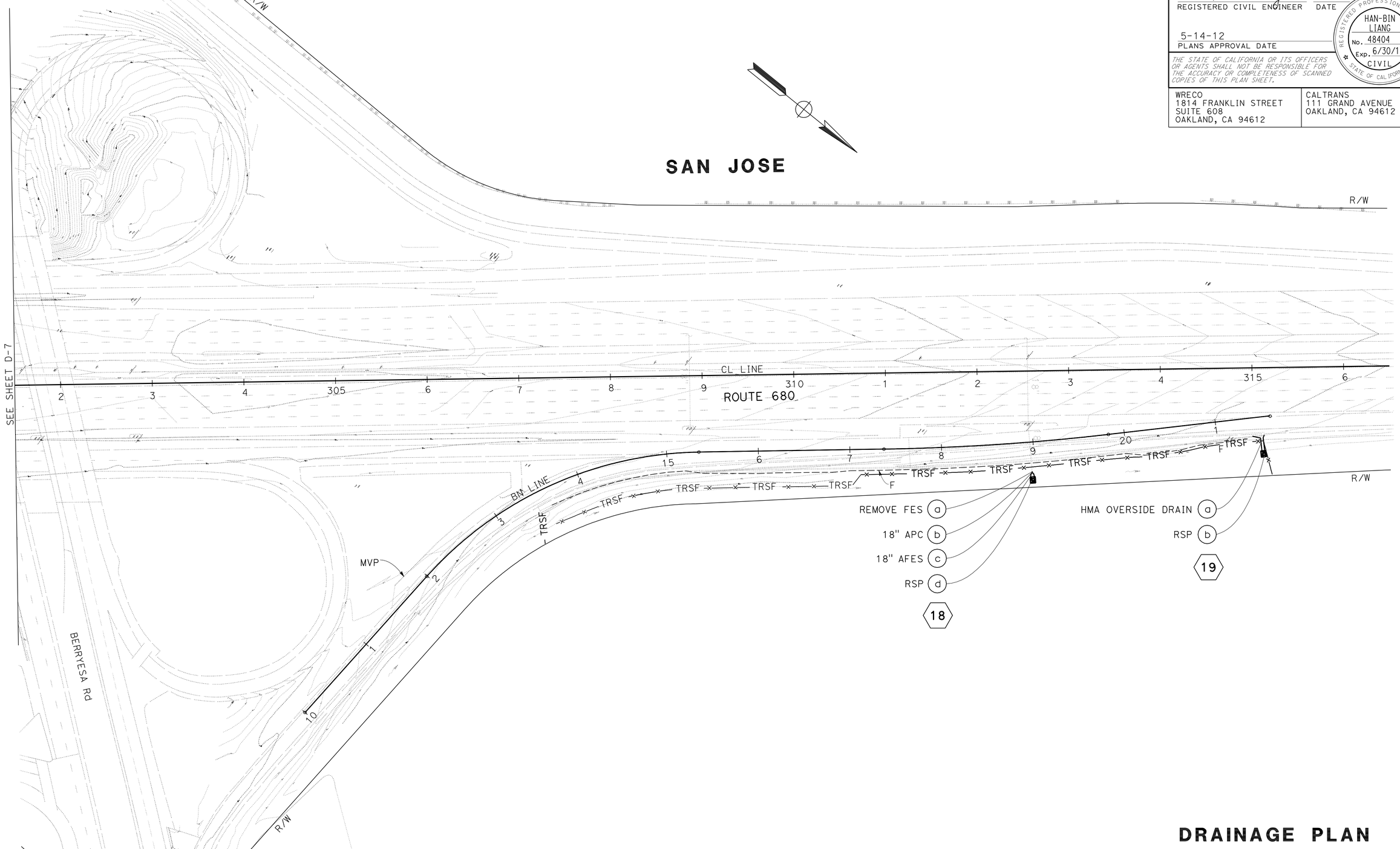

DRAINAGE PLAN

SCALE: 1" = 50'

FOR NOTES, ABBREVIATIONS AND LEGEND, SEE SHEET D-1

APPROVED FOR DRAINAGE WORK ONLY

D-8

REVISED BY	DATE REVISED
XX	00/00/11

IRENE LIU — CALCULATED-DESIGNED BY
STEVEN NAGATA — CHECKED BY
HAN-BIN LIANG — CONSULTANT FUNCTIONAL SUPERVISOR

STATE OF CALIFORNIA - DEPARTMENT OF TRANSPORTATION
Caltrans

LAST REVISION 01-31-12 — DATE PLOTTED => 15-MAY-2012 — TIME PLOTTED => 11:06

Dist	COUNTY	ROUTE	POST MILES TOTAL PROJECT	SHEET No.	TOTAL SHEETS
04	Ala,SCl	680	0.0/0.1, 0.1/9.9	62	319

REGISTERED CIVIL ENGINEER 02/10/12 DATE

5-14-12
PLANS APPROVAL DATE

REGISTERED PROFESSIONAL ENGINEER HAN-BIN LIANG No. 48404 Exp. 6/30/12 CIVIL STATE OF CALIFORNIA

THE STATE OF CALIFORNIA OR ITS OFFICERS OR AGENTS SHALL NOT BE RESPONSIBLE FOR THE ACCURACY OR COMPLETENESS OF SCANNED COPIES OF THIS PLAN SHEET.

WRECO
1814 FRANKLIN STREET
SUITE 608
OAKLAND, CA 94612

CALTRANS
111 GRAND AVENUE
OAKLAND, CA 94612

NOTE:

FOR ACCURATE RIGHT OF WAY DATA, CONTACT RIGHT OF WAY ENGINEERING AT THE DISTRICT OFFICE.

SAN JOSE

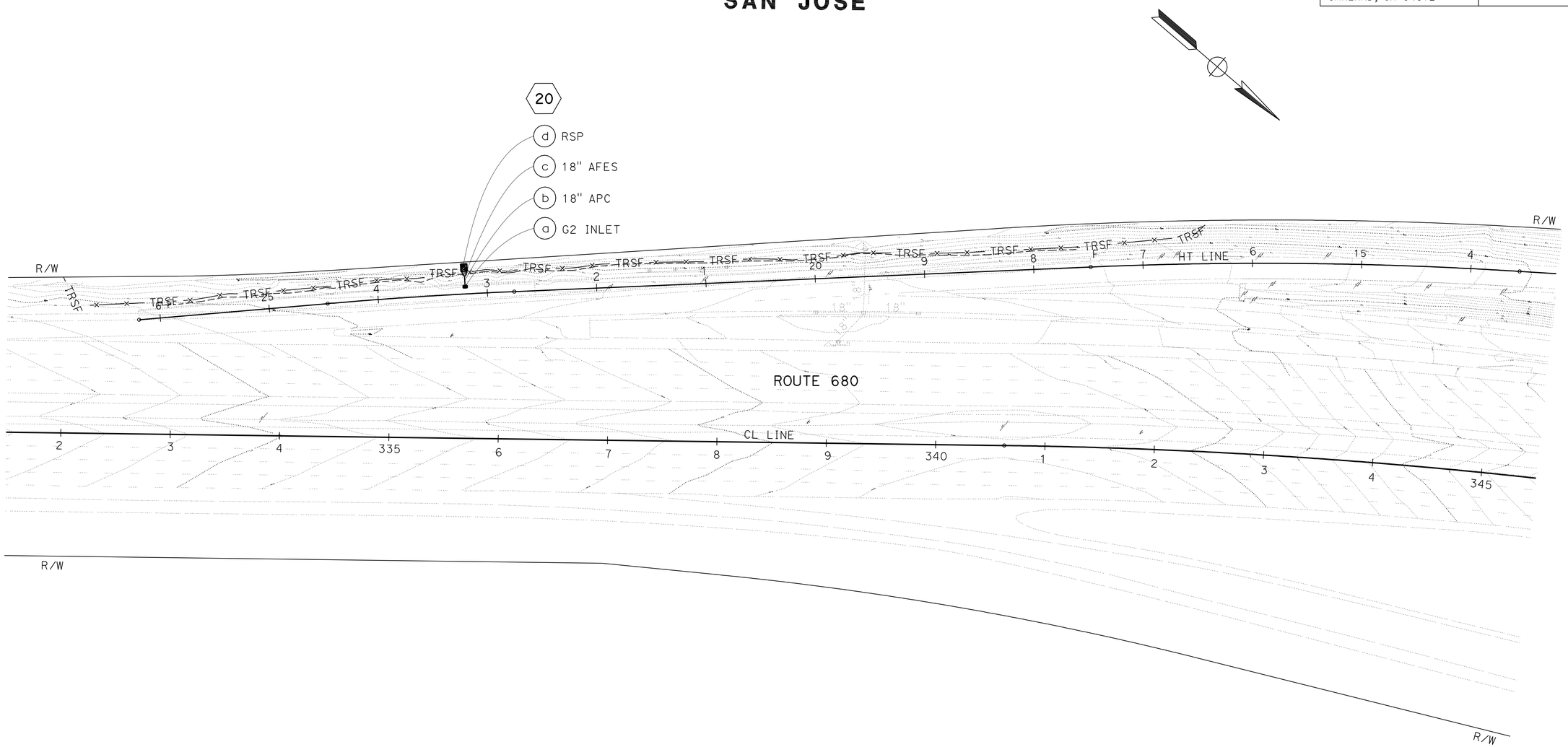

DRAINAGE PLAN

SCALE: 1" = 50'

APPROVED FOR DRAINAGE WORK ONLY

FOR NOTES, ABBREVIATIONS AND LEGEND, SEE SHEET D-1

D-9

REVISED BY	DATE REVISED
XX	00/00/11

IRENE LIU — CALCULATED-DESIGNED BY
STEVEN NAGATA — CHECKED BY
HAN-BIN LIANG — CONSULTANT FUNCTIONAL SUPERVISOR

STATE OF CALIFORNIA - DEPARTMENT OF TRANSPORTATION
Caltrans

LAST REVISION 01-31-12 | DATE PLOTTED => 15-MAY-2012 | TIME PLOTTED => 11:06

Dist	COUNTY	ROUTE	POST MILES TOTAL PROJECT	SHEET No.	TOTAL SHEETS
04	Ala,SCl	680	0.0/0.1, 0.1/9.9	63	319

REGISTERED CIVIL ENGINEER — DATE: 02/10/12

5-14-12
PLANS APPROVAL DATE

REGISTERED PROFESSIONAL ENGINEER — HAN-BIN LIANG — No. 48404 — Exp. 6/30/12 — CIVIL — STATE OF CALIFORNIA

THE STATE OF CALIFORNIA OR ITS OFFICERS OR AGENTS SHALL NOT BE RESPONSIBLE FOR THE ACCURACY OR COMPLETENESS OF SCANNED COPIES OF THIS PLAN SHEET.

WRECO
1814 FRANKLIN STREET
SUITE 608
OAKLAND, CA 94612

CALTRANS
111 GRAND AVENUE
OAKLAND, CA 94612

NOTE:

FOR ACCURATE RIGHT OF WAY DATA, CONTACT RIGHT OF WAY ENGINEERING AT THE DISTRICT OFFICE.

SAN JOSE

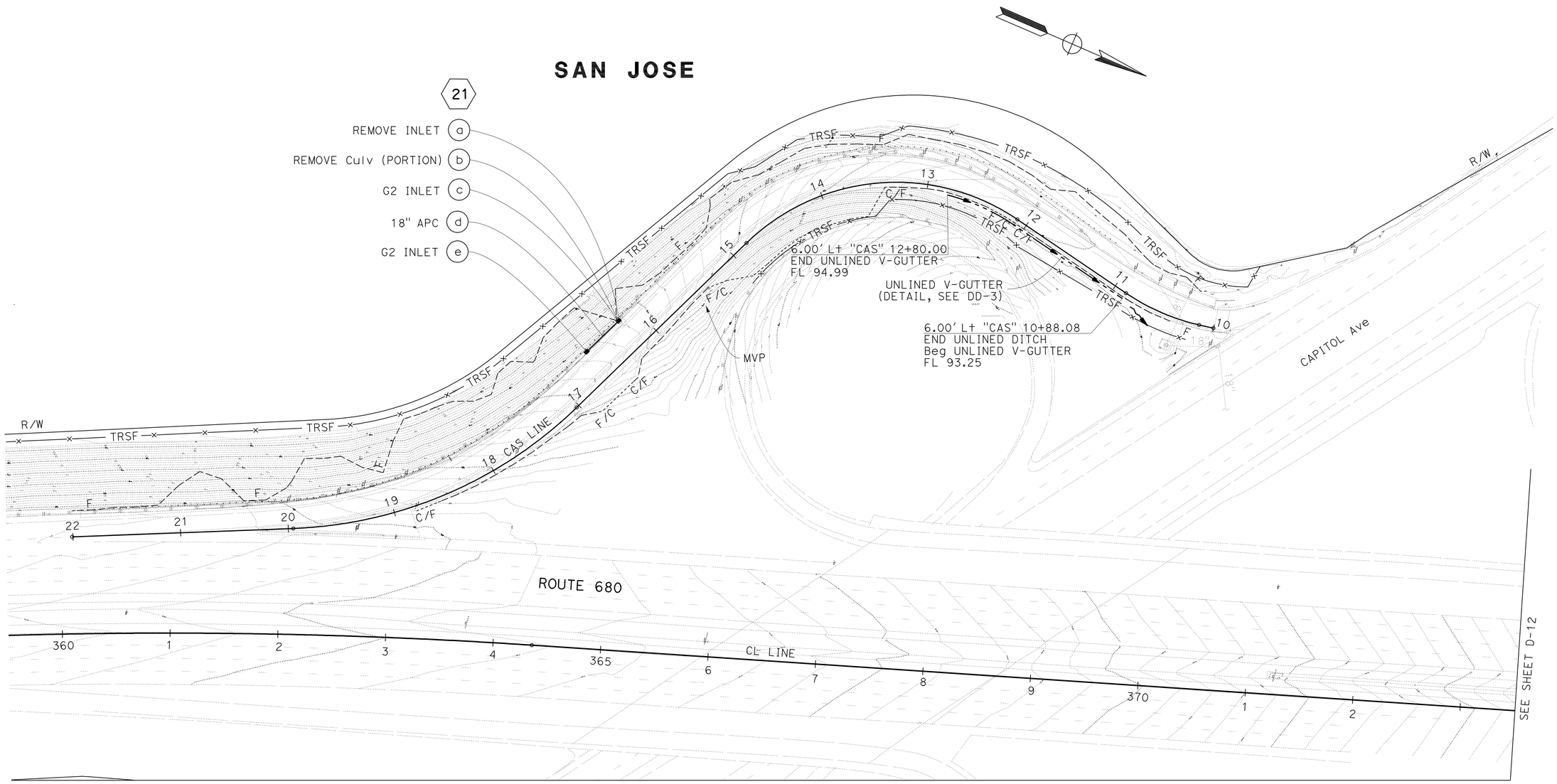

DRAINAGE PLAN

SCALE: 1" = 50'

APPROVED FOR DRAINAGE WORK ONLY

FOR NOTES, ABBREVIATIONS AND LEGEND, SEE SHEET D-1

D-10

STATE OF CALIFORNIA - DEPARTMENT OF TRANSPORTATION — Caltrans

CONSULTANT FUNCTIONAL SUPERVISOR: HAN-BIN LIANG

CALCULATED-DESIGNED BY: IRENE LIU — CHECKED BY: STEVEN NAGATA

REVISED BY: XX — DATE REVISED: 00/00/11

LAST REVISION — DATE PLOTTED => 15-MAY-2012 — TIME PLOTTED => 11:06 — 01-31-12

Dist	COUNTY	ROUTE	POST MILES TOTAL PROJECT	SHEET No.	TOTAL SHEETS
04	Ala,SCl	680	0.0/0.1, 0.1/9.9	64	319

REGISTERED CIVIL ENGINEER 02/10/12 DATE

5-14-12
PLANS APPROVAL DATE

REGISTERED PROFESSIONAL ENGINEER HAN-BIN LIANG No. 48404 Exp. 6/30/12 CIVIL STATE OF CALIFORNIA

THE STATE OF CALIFORNIA OR ITS OFFICERS OR AGENTS SHALL NOT BE RESPONSIBLE FOR THE ACCURACY OR COMPLETENESS OF SCANNED COPIES OF THIS PLAN SHEET.

WRECO
1814 FRANKLIN STREET
SUITE 608
OAKLAND, CA 94612

CALTRANS
111 GRAND AVENUE
OAKLAND, CA 94612

NOTE:

FOR ACCURATE RIGHT OF WAY DATA, CONTACT RIGHT OF WAY ENGINEERING AT THE DISTRICT OFFICE.

SAN JOSE

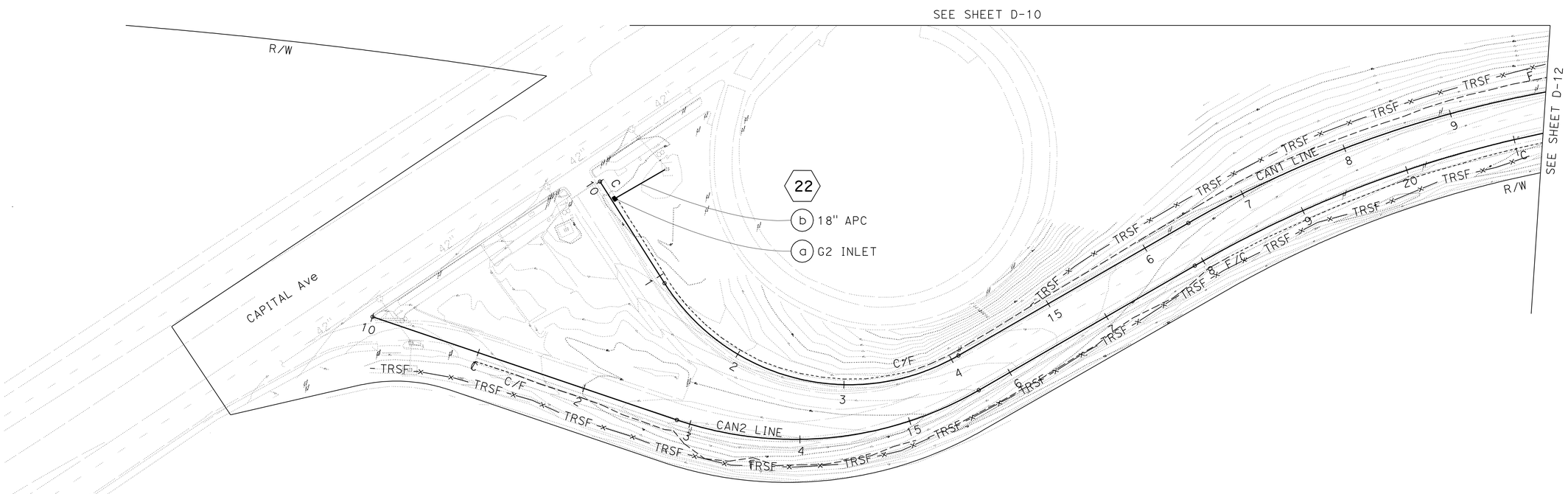

DRAINAGE PLAN

SCALE: 1" = 50'

APPROVED FOR DRAINAGE WORK ONLY

FOR NOTES, ABBREVIATIONS AND LEGEND, SEE SHEET D-1

D-11

STATE OF CALIFORNIA - DEPARTMENT OF TRANSPORTATION
Caltrans

CONSULTANT FUNCTIONAL SUPERVISOR: HAN-BIN LIANG
CALCULATED-DESIGNED BY: IRENE LIU
CHECKED BY: STEVEN NAGATA
REVISED BY: XX
DATE REVISED: 00/00/11

LAST REVISION 01-31-12
DATE PLOTTED => 15-MAY-2012
TIME PLOTTED => 11:06

Dist	COUNTY	ROUTE	POST MILES TOTAL PROJECT	SHEET No.	TOTAL SHEETS
04	Ala,SCl	680	0.0/0.1, 0.1/9.9	65	319

REGISTERED CIVIL ENGINEER 02/10/12 DATE

5-14-12
PLANS APPROVAL DATE

REGISTERED PROFESSIONAL ENGINEER HAN-BIN LIANG No. 48404 Exp. 6/30/12 CIVIL STATE OF CALIFORNIA

THE STATE OF CALIFORNIA OR ITS OFFICERS OR AGENTS SHALL NOT BE RESPONSIBLE FOR THE ACCURACY OR COMPLETENESS OF SCANNED COPIES OF THIS PLAN SHEET.

WRECO
1814 FRANKLIN STREET
SUITE 608
OAKLAND, CA 94612

CALTRANS
111 GRAND AVENUE
OAKLAND, CA 94612

NOTE:

FOR ACCURATE RIGHT OF WAY DATA, CONTACT RIGHT OF WAY ENGINEERING AT THE DISTRICT OFFICE.

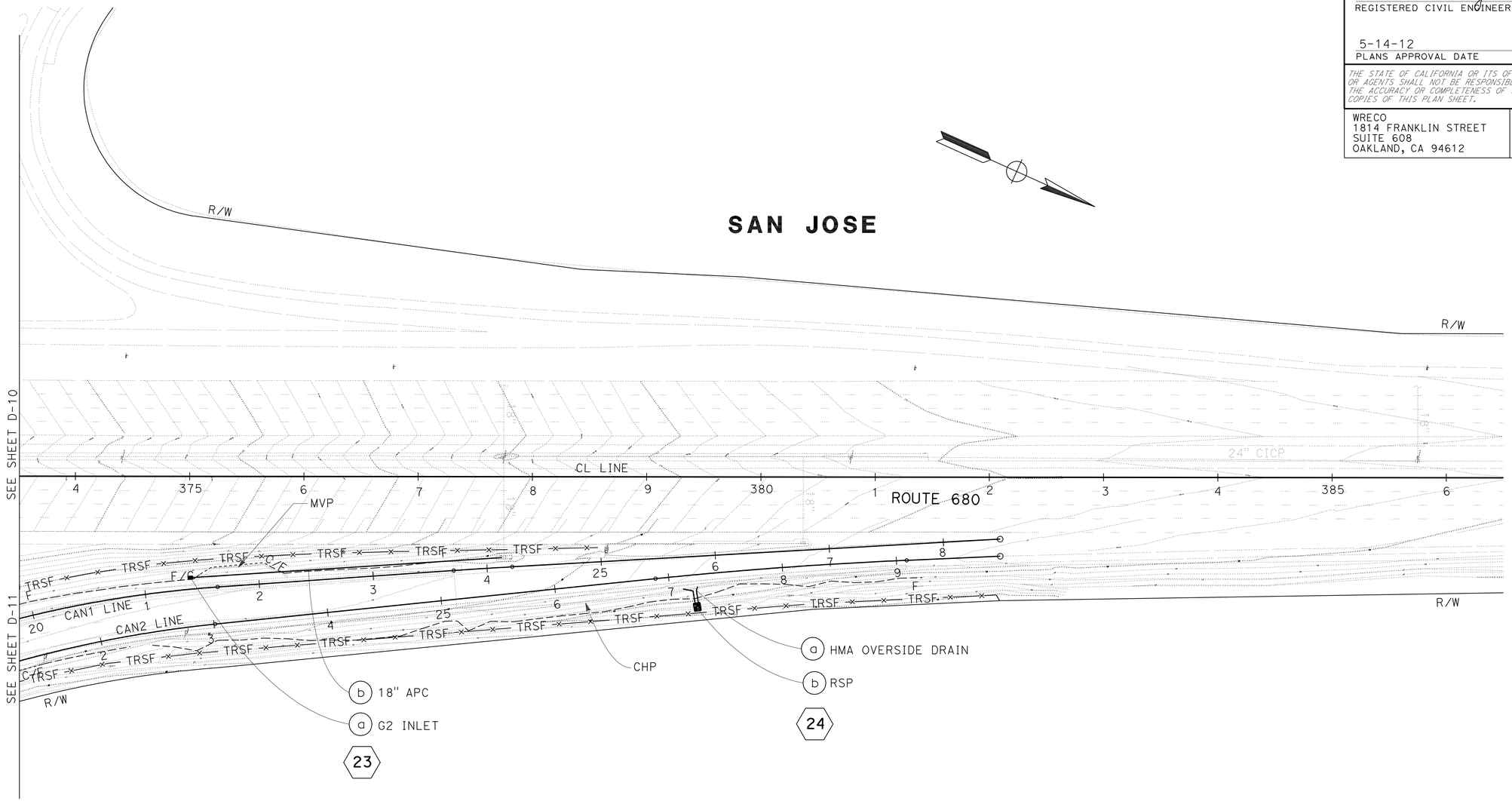

DRAINAGE PLAN

SCALE: 1" = 50'

FOR NOTES, ABBREVIATIONS AND LEGEND, SEE SHEET D-1

APPROVED FOR DRAINAGE WORK ONLY

D-12

STATE OF CALIFORNIA - DEPARTMENT OF TRANSPORTATION

Caltrans

CONSULTANT FUNCTIONAL SUPERVISOR: HAN-BIN LIANG

CALCULATED-DESIGNED BY: IRENE LIU

CHECKED BY: STEVEN NAGATA

REVISED BY: XX

DATE REVISED: 00/00/11

LAST REVISION 01-31-12

DATE PLOTTED => 15-MAY-2012
TIME PLOTTED => 11:06

Dist	COUNTY	ROUTE	POST MILES TOTAL PROJECT	SHEET No.	TOTAL SHEETS
04	Ala,SCl	680	0.0/0.1, 0.1/9.9	66	319

REGISTERED CIVIL ENGINEER — DATE: 02/10/12

5-14-12
PLANS APPROVAL DATE

REGISTERED PROFESSIONAL ENGINEER — HAN-BIN LIANG — No. 48404 — Exp. 6/30/12 — CIVIL — STATE OF CALIFORNIA

THE STATE OF CALIFORNIA OR ITS OFFICERS OR AGENTS SHALL NOT BE RESPONSIBLE FOR THE ACCURACY OR COMPLETENESS OF SCANNED COPIES OF THIS PLAN SHEET.

WRECO
1814 FRANKLIN STREET
SUITE 608
OAKLAND, CA 94612

CALTRANS
111 GRAND AVENUE
OAKLAND, CA 94612

NOTE:

FOR ACCURATE RIGHT OF WAY DATA, CONTACT RIGHT OF WAY ENGINEERING AT THE DISTRICT OFFICE.

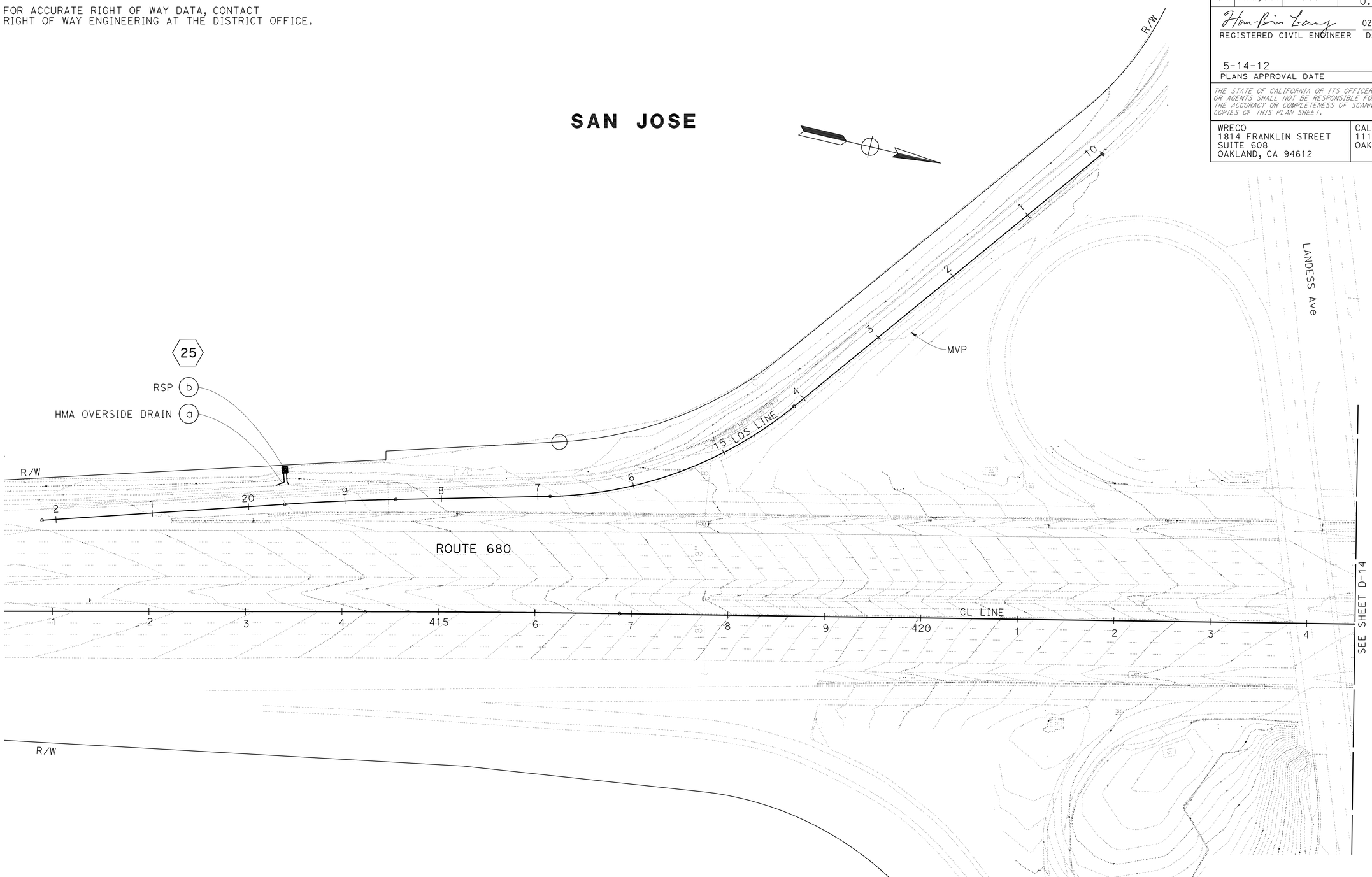

DRAINAGE PLAN

SCALE: 1" = 50'

APPROVED FOR DRAINAGE WORK ONLY

FOR NOTES, ABBREVIATIONS AND LEGEND, SEE SHEET D-1

D-13

STATE OF CALIFORNIA - DEPARTMENT OF TRANSPORTATION — Caltrans

CONSULTANT FUNCTIONAL SUPERVISOR: HAN-BIN LIANG

CALCULATED-DESIGNED BY: IRENE LIU — CHECKED BY: STEVEN NAGATA

REVISED BY: XX — DATE REVISED: 00/00/11

LAST REVISION 01-31-12 — DATE PLOTTED => 14-MAY-2012 — TIME PLOTTED => 08:54

Dist	COUNTY	ROUTE	POST MILES TOTAL PROJECT	SHEET No.	TOTAL SHEETS
04	Ala,SCl	680	0.0/0.1, 0.1/9.9	67	319

Han-Bin Liang 02/10/12
REGISTERED CIVIL ENGINEER DATE

5-14-12
PLANS APPROVAL DATE

REGISTERED PROFESSIONAL ENGINEER HAN-BIN LIANG No. 48404 Exp. 6/30/12 CIVIL STATE OF CALIFORNIA

THE STATE OF CALIFORNIA OR ITS OFFICERS OR AGENTS SHALL NOT BE RESPONSIBLE FOR THE ACCURACY OR COMPLETENESS OF SCANNED COPIES OF THIS PLAN SHEET.

WRECO
1814 FRANKLIN STREET
SUITE 608
OAKLAND, CA 94612

CALTRANS
111 GRAND AVENUE
OAKLAND, CA 94612

NOTE:

FOR ACCURATE RIGHT OF WAY DATA, CONTACT RIGHT OF WAY ENGINEERING AT THE DISTRICT OFFICE.

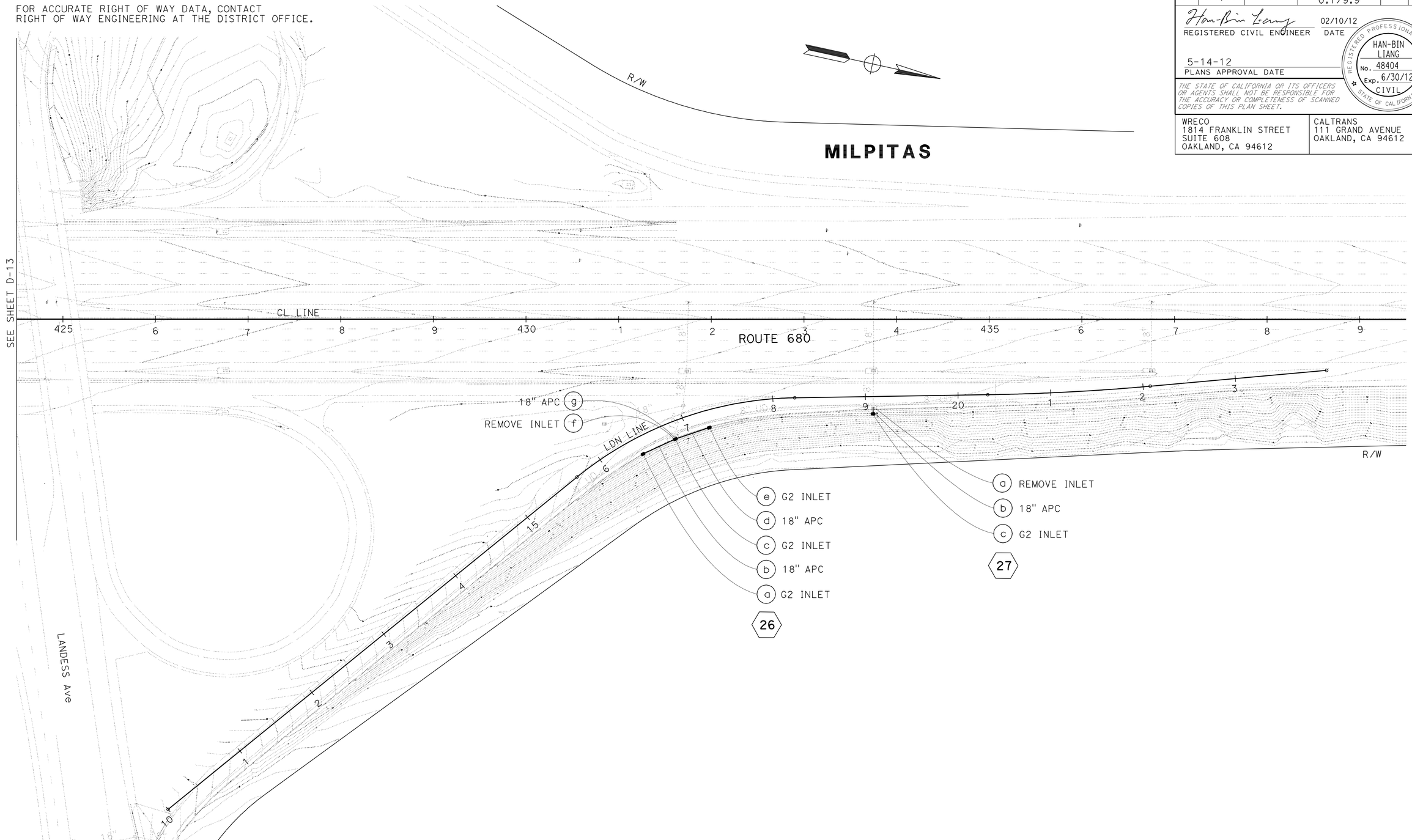

DRAINAGE PLAN

SCALE: 1" = 50'

FOR NOTES, ABBREVIATIONS AND LEGEND, SEE SHEET D-1

APPROVED FOR DRAINAGE WORK ONLY

D-14

STATE OF CALIFORNIA - DEPARTMENT OF TRANSPORTATION

Caltrans

CONSULTANT FUNCTIONAL SUPERVISOR: HAN-BIN LIANG

CALCULATED-DESIGNED BY: IRENE LIU

CHECKED BY: STEVEN NAGATA

REVISED BY: XX

DATE REVISED: 00/00/11

LAST REVISION 01-31-12

DATE PLOTTED => 15-MAY-2012
TIME PLOTTED => 11:06

Dist	COUNTY	ROUTE	POST MILES TOTAL PROJECT	SHEET No.	TOTAL SHEETS
04	Ala,SCl	680	0.0/0.1, 0.1/9.9	68	319

REGISTERED CIVIL ENGINEER — DATE: 02/10/12

5-14-12
PLANS APPROVAL DATE

REGISTERED PROFESSIONAL ENGINEER — HAN-BIN LIANG — No. 48404 — Exp. 6/30/12 — CIVIL — STATE OF CALIFORNIA

THE STATE OF CALIFORNIA OR ITS OFFICERS OR AGENTS SHALL NOT BE RESPONSIBLE FOR THE ACCURACY OR COMPLETENESS OF SCANNED COPIES OF THIS PLAN SHEET.

WRECO
1814 FRANKLIN STREET
SUITE 608
OAKLAND, CA 94612

CALTRANS
111 GRAND AVENUE
OAKLAND, CA 94612

NOTE:

FOR ACCURATE RIGHT OF WAY DATA, CONTACT RIGHT OF WAY ENGINEERING AT THE DISTRICT OFFICE.

MILPITAS

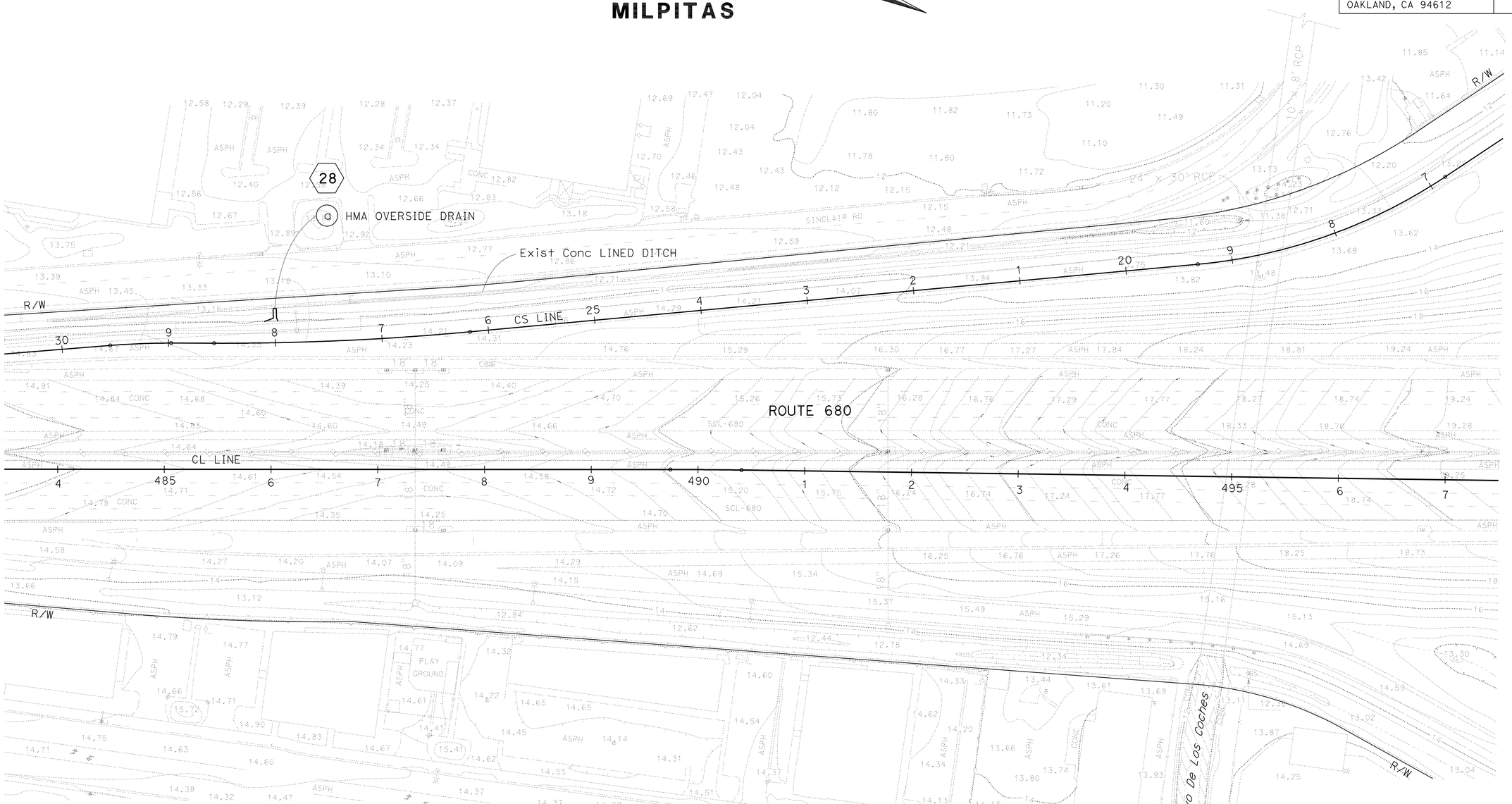

DRAINAGE PLAN

SCALE: 1" = 50'

APPROVED FOR DRAINAGE WORK ONLY

FOR NOTES, ABBREVIATIONS AND LEGEND, SEE SHEET D-1

D-15

STATE OF CALIFORNIA - DEPARTMENT OF TRANSPORTATION — Caltrans

CONSULTANT FUNCTIONAL SUPERVISOR: HAN-BIN LIANG

CALCULATED-DESIGNED BY: IRENE LIU — CHECKED BY: STEVEN NAGATA

REVISED BY: XX — DATE REVISED: 00/00/11

LAST REVISION 01-31-12 — DATE PLOTTED => 14-MAY-2012 — TIME PLOTTED => 08:55

Dist	COUNTY	ROUTE	POST MILES TOTAL PROJECT	SHEET No.	TOTAL SHEETS
04	Ala,SCl	680	0.0/0.1, 0.1/9.9	69	319

REGISTERED CIVIL ENGINEER 02/10/12 DATE

5-14-12
PLANS APPROVAL DATE

REGISTERED PROFESSIONAL ENGINEER HAN-BIN LIANG No. 48404 Exp. 6/30/12 CIVIL STATE OF CALIFORNIA

THE STATE OF CALIFORNIA OR ITS OFFICERS OR AGENTS SHALL NOT BE RESPONSIBLE FOR THE ACCURACY OR COMPLETENESS OF SCANNED COPIES OF THIS PLAN SHEET.

WRECO
1814 FRANKLIN STREET
SUITE 608
OAKLAND, CA 94612

CALTRANS
111 GRAND AVENUE
OAKLAND, CA 94612

NOTE:

FOR ACCURATE RIGHT OF WAY DATA, CONTACT RIGHT OF WAY ENGINEERING AT THE DISTRICT OFFICE.

DRAINAGE PLAN

SCALE: 1" = 50'

FOR NOTES, ABBREVIATIONS AND LEGEND, SEE SHEET D-1

APPROVED FOR DRAINAGE WORK ONLY

D-16

REVISED BY	DATE REVISED
IL	04/24/12

IRENE LIU — STEVEN NAGATA

CALCULATED-DESIGNED BY — CHECKED BY

CONSULTANT FUNCTIONAL SUPERVISOR — HAN-BIN LIANG

STATE OF CALIFORNIA - DEPARTMENT OF TRANSPORTATION

Caltrans

LAST REVISION 04-24-12 — DATE PLOTTED => 15-MAY-2012 TIME PLOTTED => 11:07

Dist	COUNTY	ROUTE	POST MILES TOTAL PROJECT	SHEET No.	TOTAL SHEETS
04	Ala,SCl	680	0.0/0.1, 0.1/9.9	70	319

REGISTERED CIVIL ENGINEER 02/10/12 DATE

5-14-12
PLANS APPROVAL DATE

REGISTERED PROFESSIONAL ENGINEER HAN-BIN LIANG No. 48404 Exp. 6/30/12 CIVIL STATE OF CALIFORNIA

THE STATE OF CALIFORNIA OR ITS OFFICERS OR AGENTS SHALL NOT BE RESPONSIBLE FOR THE ACCURACY OR COMPLETENESS OF SCANNED COPIES OF THIS PLAN SHEET.

WRECO
1814 FRANKLIN STREET
SUITE 608
OAKLAND, CA 94612

CALTRANS
111 GRAND AVENUE
OAKLAND, CA 94612

NOTE:

FOR ACCURATE RIGHT OF WAY DATA, CONTACT RIGHT OF WAY ENGINEERING AT THE DISTRICT OFFICE.

MILPITAS

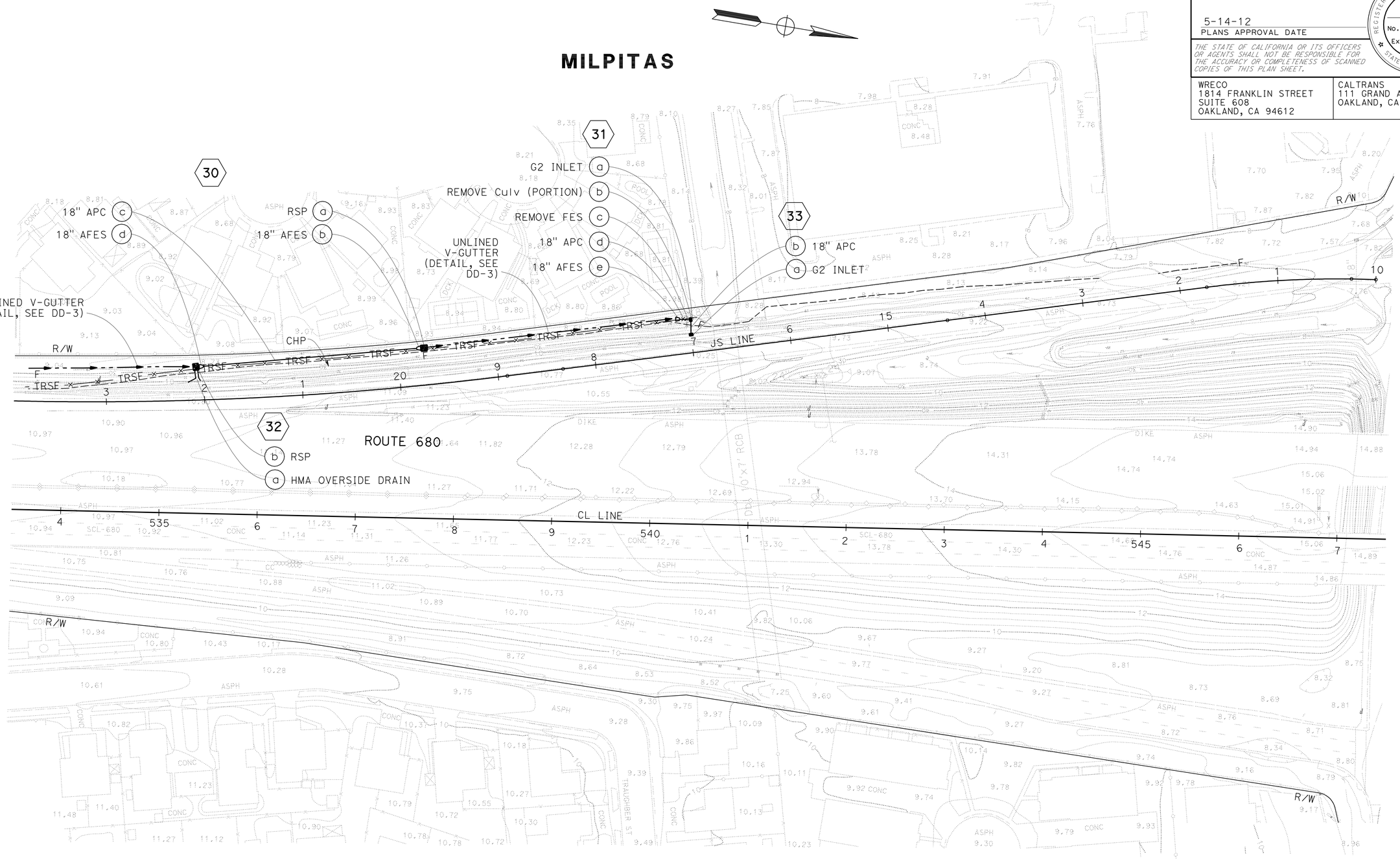

DRAINAGE PLAN

SCALE: 1" = 50'

FOR NOTES, ABBREVIATIONS AND LEGEND, SEE SHEET D-1

APPROVED FOR DRAINAGE WORK ONLY

D-17

STATE OF CALIFORNIA - DEPARTMENT OF TRANSPORTATION

Caltrans

CONSULTANT FUNCTIONAL SUPERVISOR: HAN-BIN LIANG

CALCULATED-DESIGNED BY: STEVEN NAGATA

CHECKED BY: IRENE LIU

REVISED BY: XX

DATE REVISED: 00/00/11

LAST REVISION: 01-31-12

DATE PLOTTED => 15-MAY-2012
TIME PLOTTED => 11:07

Dist	COUNTY	ROUTE	POST MILES TOTAL PROJECT	SHEET No.	TOTAL SHEETS
04	Ala,SCl	680	0.0/0.1, 0.1/9.9	71	319

REGISTERED CIVIL ENGINEER — DATE 02/10/12

5-14-12
PLANS APPROVAL DATE

REGISTERED PROFESSIONAL ENGINEER HAN-BIN LIANG No. 48404 Exp. 6/30/12 CIVIL STATE OF CALIFORNIA

THE STATE OF CALIFORNIA OR ITS OFFICERS OR AGENTS SHALL NOT BE RESPONSIBLE FOR THE ACCURACY OR COMPLETENESS OF SCANNED COPIES OF THIS PLAN SHEET.

WRECO
1243 ALPINE ROAD
SUITE 108
WALNUT CREEK, CA 94596

CALTRANS
111 GRAND AVENUE
OAKLAND, CA 94612

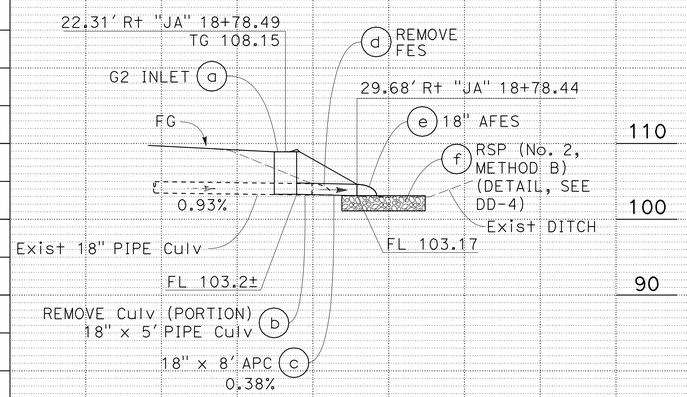

DRAINAGE SYSTEM No. 1

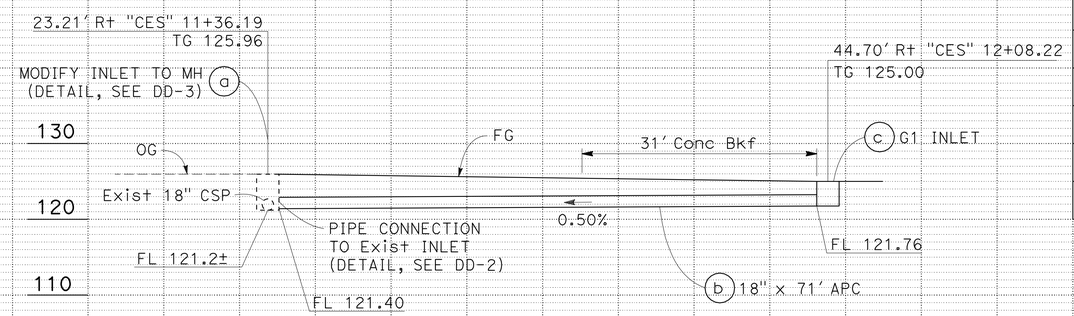

DRAINAGE SYSTEM No. 2

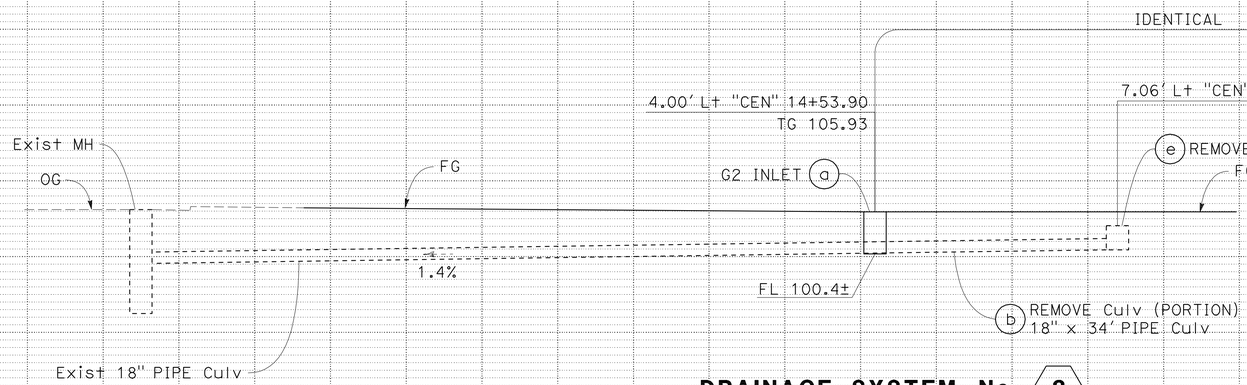

DRAINAGE SYSTEM No. 3

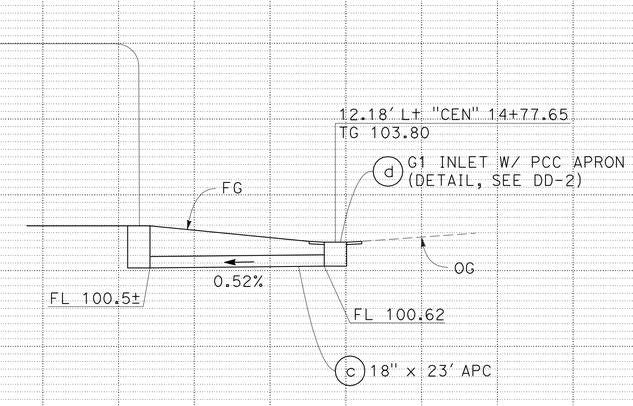

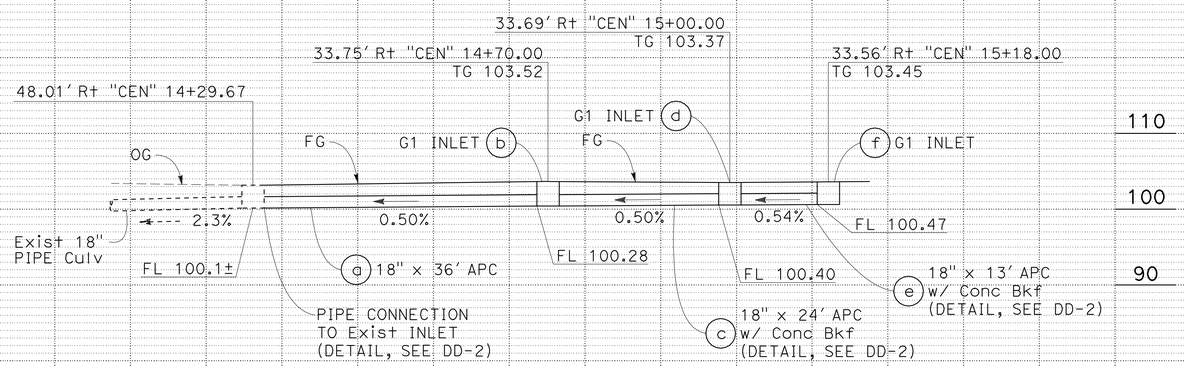

DRAINAGE SYSTEM No. 4

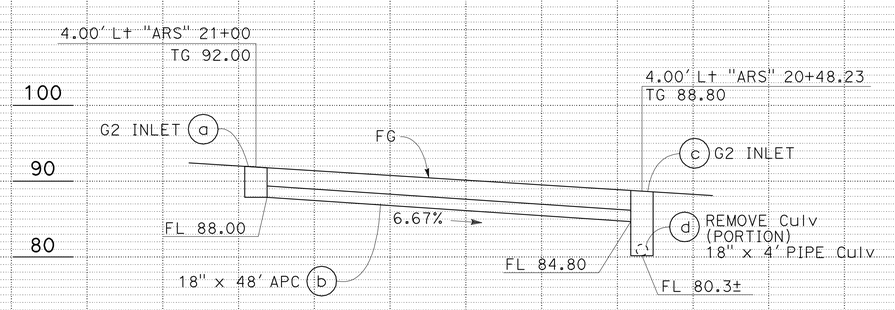

DRAINAGE SYSTEM No. 5

DRAINAGE PROFILES

SCALE: Horiz 1" = 10'
Vert 1" = 10'

DP-1

REVISED BY	DATE REVISED
XX	00/00/11

IRENE LIU — STEVEN NAGATA — CALCULATED-DESIGNED BY — CHECKED BY

CONSULTANT FUNCTIONAL SUPERVISOR: HAN-BIN LIANG

STATE OF CALIFORNIA - DEPARTMENT OF TRANSPORTATION — Caltrans

LAST REVISION 01-31-12 — DATE PLOTTED => 14-MAY-2012 — TIME PLOTTED => 10:33

Dist	COUNTY	ROUTE	POST MILES TOTAL PROJECT	SHEET No.	TOTAL SHEETS
04	Ala,SCl	680	0.0/0.1, 0.1/9.9	72	319

REGISTERED CIVIL ENGINEER 02/10/12 DATE

5-14-12
PLANS APPROVAL DATE

REGISTERED PROFESSIONAL ENGINEER HAN-BIN LIANG No. 48404 Exp. 6/30/12 CIVIL STATE OF CALIFORNIA

THE STATE OF CALIFORNIA OR ITS OFFICERS OR AGENTS SHALL NOT BE RESPONSIBLE FOR THE ACCURACY OR COMPLETENESS OF SCANNED COPIES OF THIS PLAN SHEET.

WRECO
1243 ALPINE ROAD
SUITE 108
WALNUT CREEK, CA 94596

CALTRANS
111 GRAND AVENUE
OAKLAND, CA 94612

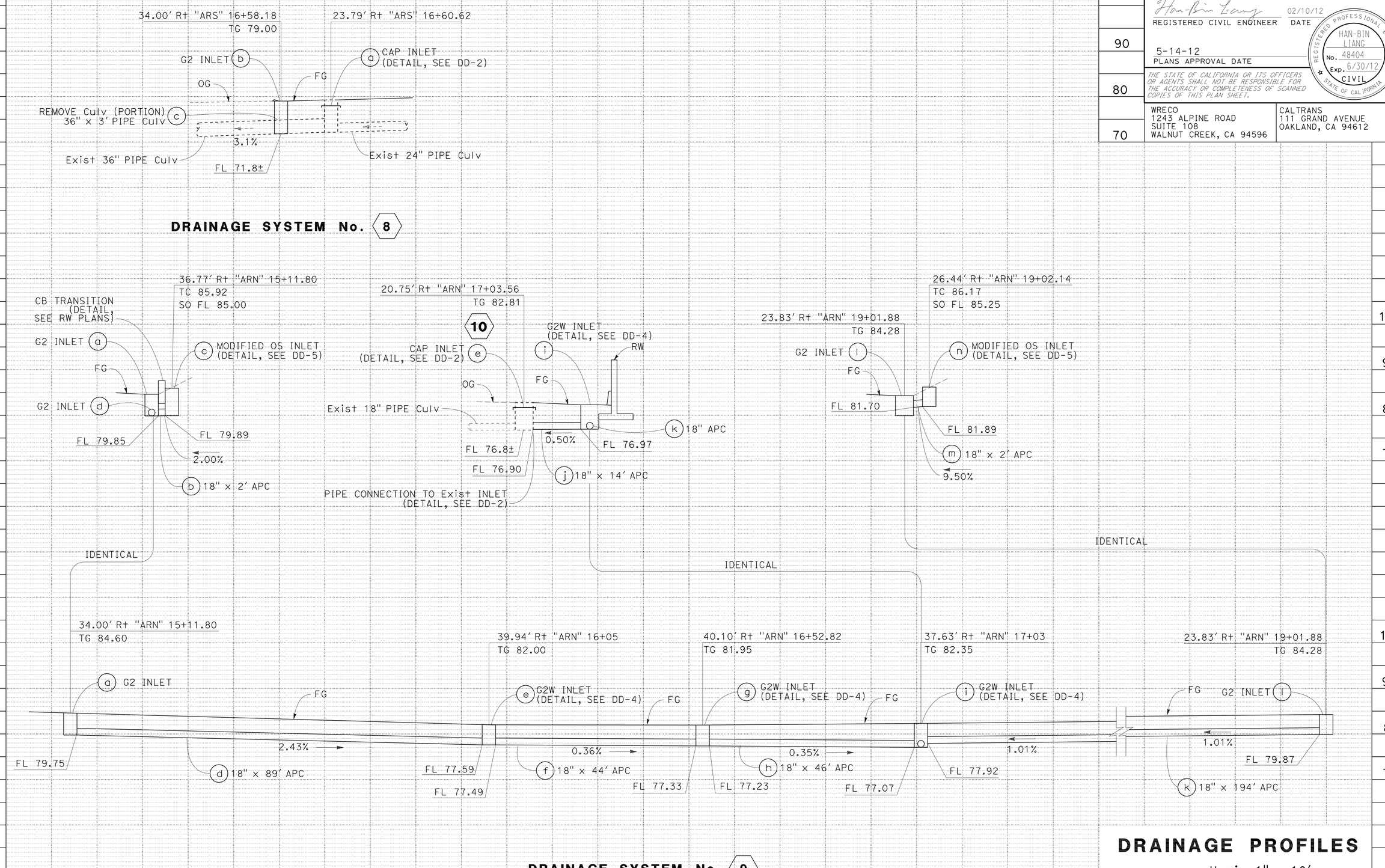

DRAINAGE PROFILES

SCALE: Horiz 1" = 10'
Vert 1" = 10'

DP-2

STATE OF CALIFORNIA - DEPARTMENT OF TRANSPORTATION
Caltrans

CONSULTANT FUNCTIONAL SUPERVISOR: HAN-BIN LIANG
CALCULATED-DESIGNED BY: IRENE LIU
CHECKED BY: STEVEN NAGATA
REVISED BY: XX
DATE REVISED: 00/00/11

LAST REVISION 01-31-12
DATE PLOTTED => 14-MAY-2012
TIME PLOTTED => 10:33

Dist	COUNTY	ROUTE	POST MILES TOTAL PROJECT	SHEET No.	TOTAL SHEETS
04	Ala,SCl	680	0.0/0.1, 0.1/9.9	73	319

REGISTERED CIVIL ENGINEER 02/10/12 DATE

5-14-12
PLANS APPROVAL DATE

REGISTERED PROFESSIONAL ENGINEER HAN-BIN LIANG No. 48404 Exp. 6/30/12 CIVIL STATE OF CALIFORNIA

THE STATE OF CALIFORNIA OR ITS OFFICERS OR AGENTS SHALL NOT BE RESPONSIBLE FOR THE ACCURACY OR COMPLETENESS OF SCANNED COPIES OF THIS PLAN SHEET.

WRECO
1243 ALPINE ROAD
SUITE 108
WALNUT CREEK, CA 94596

CALTRANS
111 GRAND AVENUE
OAKLAND, CA 94612

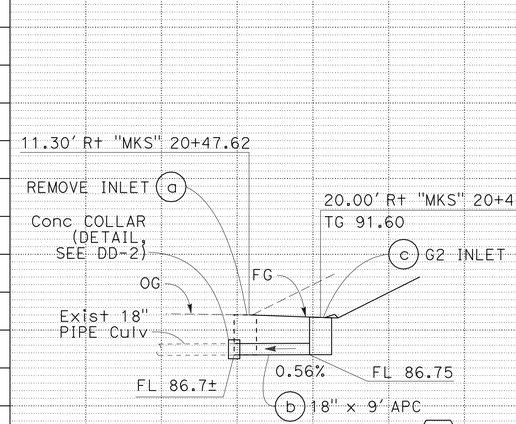

DRAINAGE SYSTEM No. 11

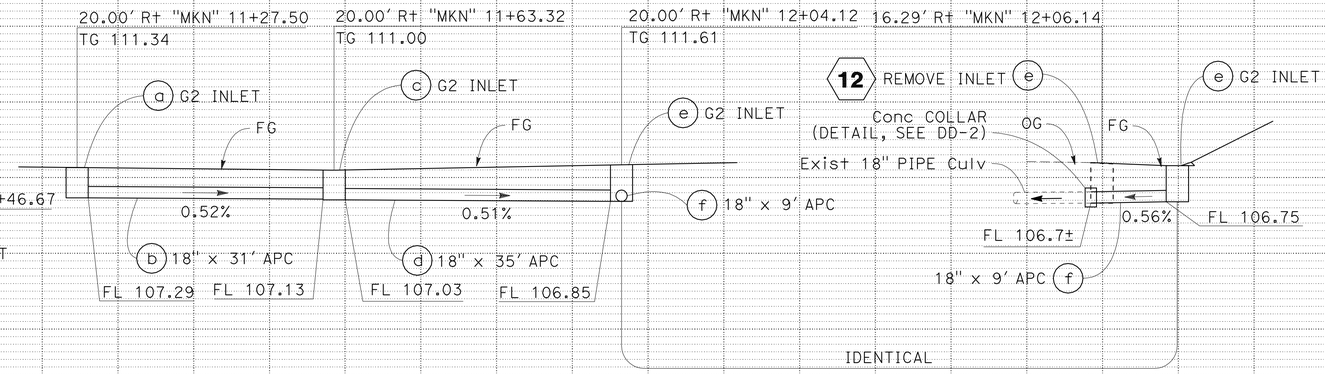

DRAINAGE SYSTEM No. 13

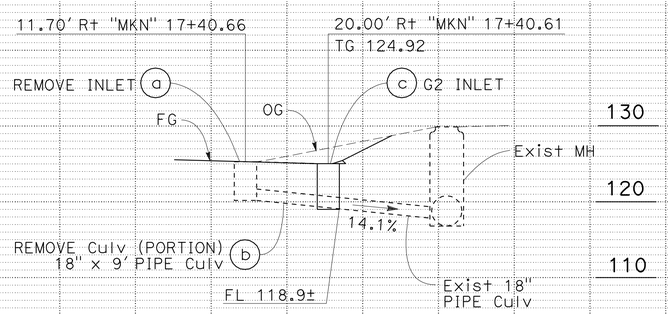

DRAINAGE SYSTEM No. 14

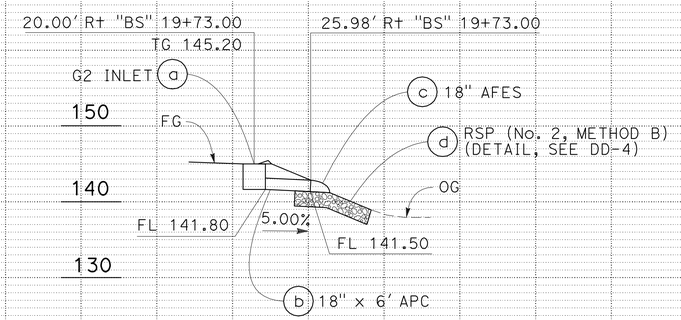

DRAINAGE SYSTEM No. 15

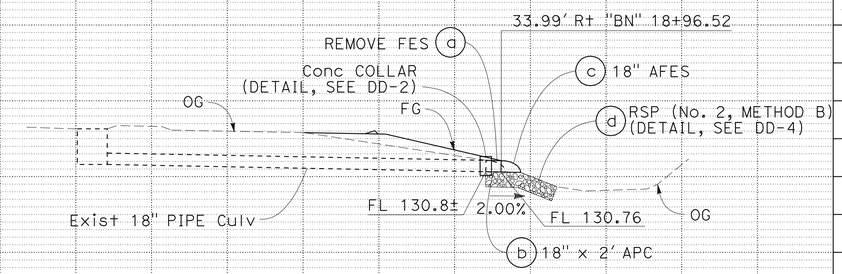

DRAINAGE SYSTEM No. 18

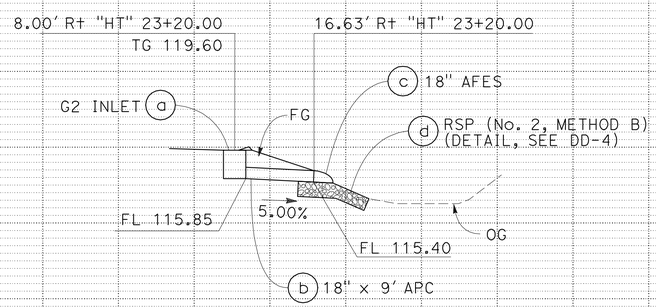

DRAINAGE SYSTEM No. 20

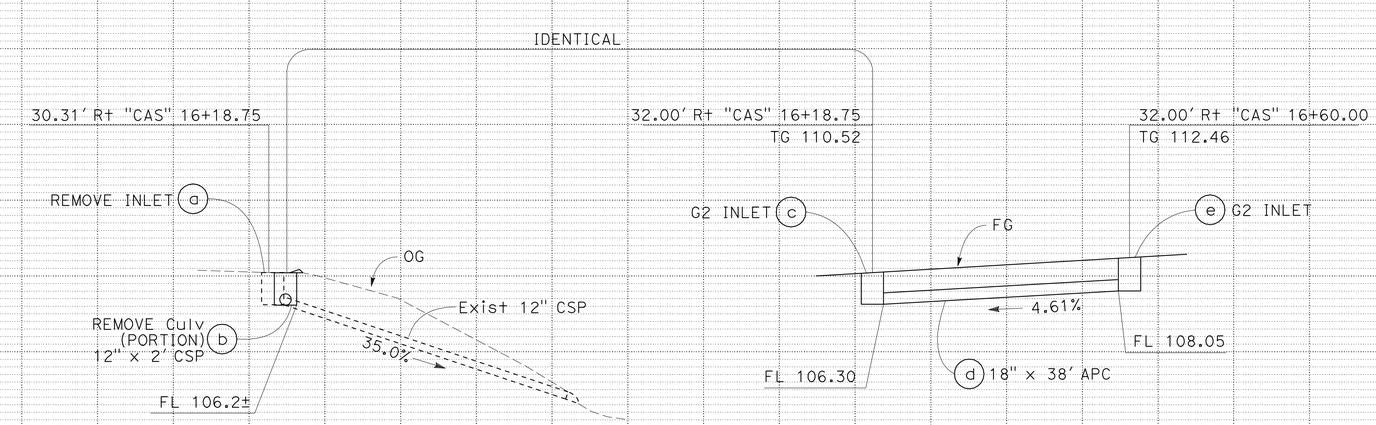

DRAINAGE SYSTEM No. 21

DRAINAGE PROFILES

SCALE: Horiz 1" = 10'
Vert 1" = 10'

DP-3

REVISED BY	DATE REVISED
XX	00/00/11

IRENE LIU — STEVEN NAGATA

CALCULATED-DESIGNED BY — CHECKED BY

CONSULTANT FUNCTIONAL SUPERVISOR — HAN-BIN LIANG

STATE OF CALIFORNIA - DEPARTMENT OF TRANSPORTATION

Caltrans

LAST REVISION 01-31-12 — DATE PLOTTED => 14-MAY-2012 — TIME PLOTTED => 10:33

Dist	COUNTY	ROUTE	POST MILES TOTAL PROJECT	SHEET No.	TOTAL SHEETS
04	Ala,SCl	680	0.0/0.1, 0.1/9.9	74	319

REGISTERED CIVIL ENGINEER 02/10/12 DATE

5-14-12
PLANS APPROVAL DATE

REGISTERED PROFESSIONAL ENGINEER HAN-BIN LIANG No. 48404 Exp. 6/30/12 CIVIL STATE OF CALIFORNIA

THE STATE OF CALIFORNIA OR ITS OFFICERS OR AGENTS SHALL NOT BE RESPONSIBLE FOR THE ACCURACY OR COMPLETENESS OF SCANNED COPIES OF THIS PLAN SHEET.

WRECO
1243 ALPINE ROAD
SUITE 108
WALNUT CREEK, CA 94596

CALTRANS
111 GRAND AVENUE
OAKLAND, CA 94612

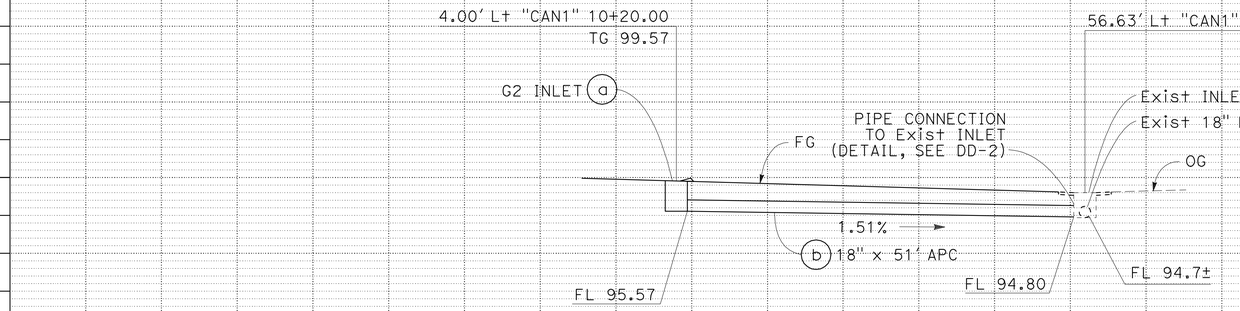

DRAINAGE SYSTEM No. 22

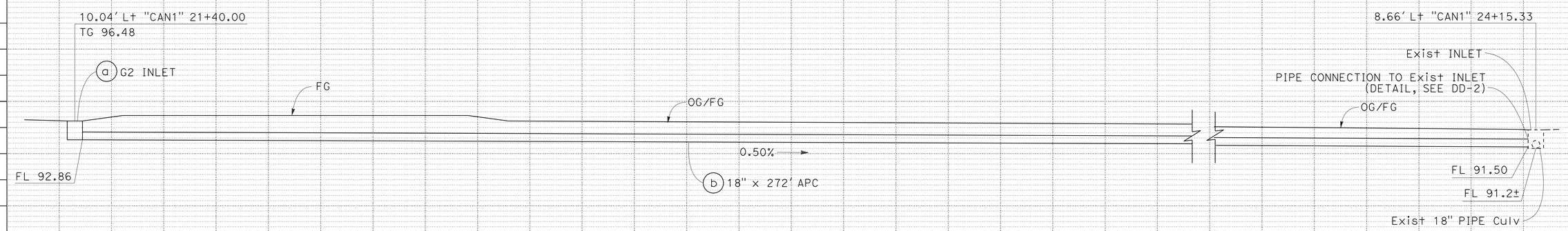

DRAINAGE SYSTEM No. 23

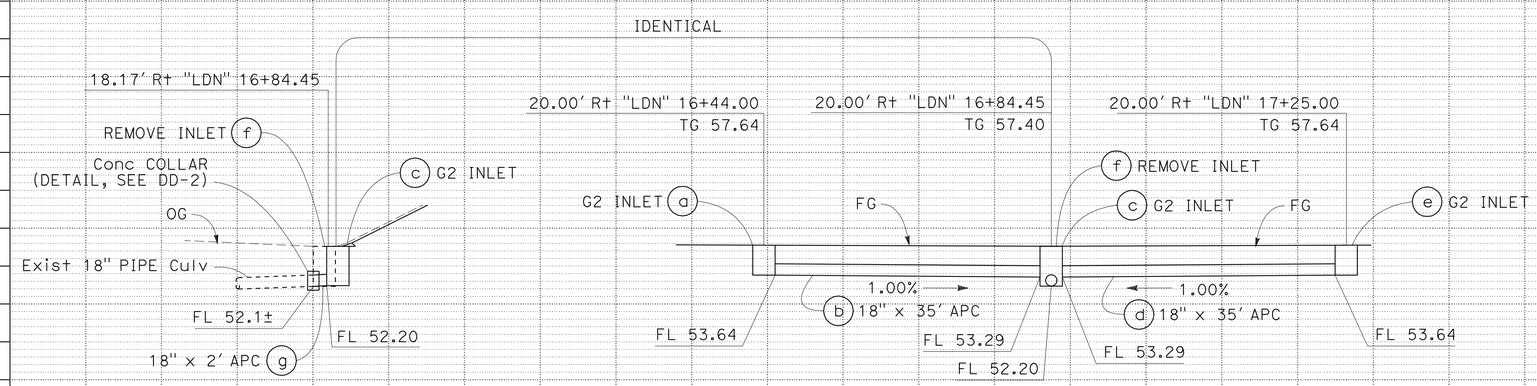

DRAINAGE SYSTEM No. 26

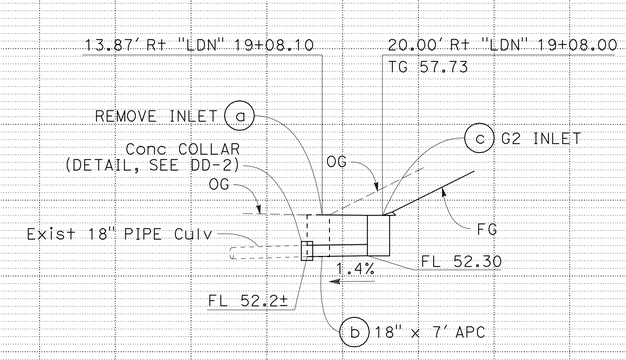

DRAINAGE SYSTEM No. 27

DRAINAGE PROFILES

SCALE: Horiz 1" = 10'
Vert 1" = 10'

DP-4

REVISED BY	DATE REVISED
XX	00/00/11

IRENE LIU — STEVEN NAGATA — CALCULATED-DESIGNED BY — CHECKED BY

HAN-BIN LIANG — CONSULTANT FUNCTIONAL SUPERVISOR

STATE OF CALIFORNIA - DEPARTMENT OF TRANSPORTATION

Caltrans

LAST REVISION 01-31-12 — DATE PLOTTED => 14-MAY-2012 — TIME PLOTTED => 10:33

Dist	COUNTY	ROUTE	POST MILES TOTAL PROJECT	SHEET No.	TOTAL SHEETS
04	Ala,SCl	680	0.0/0.1, 0.1/9.9	75	319

REGISTERED CIVIL ENGINEER 02/10/12 DATE

5-14-12
PLANS APPROVAL DATE

REGISTERED PROFESSIONAL ENGINEER HAN-BIN LIANG No. 48404 Exp. 6/30/12 CIVIL STATE OF CALIFORNIA

THE STATE OF CALIFORNIA OR ITS OFFICERS OR AGENTS SHALL NOT BE RESPONSIBLE FOR THE ACCURACY OR COMPLETENESS OF SCANNED COPIES OF THIS PLAN SHEET.

WRECO
1243 ALPINE ROAD
SUITE 108
WALNUT CREEK, CA 94596

CALTRANS
111 GRAND AVENUE
OAKLAND, CA 94612

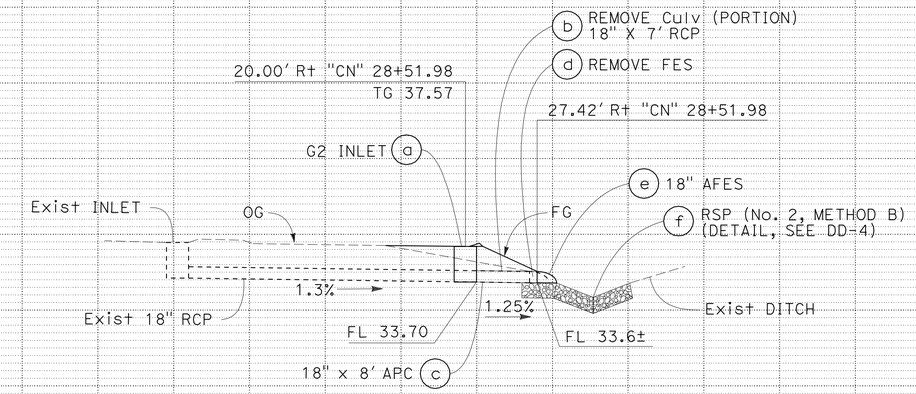

DRAINAGE SYSTEM No. 29

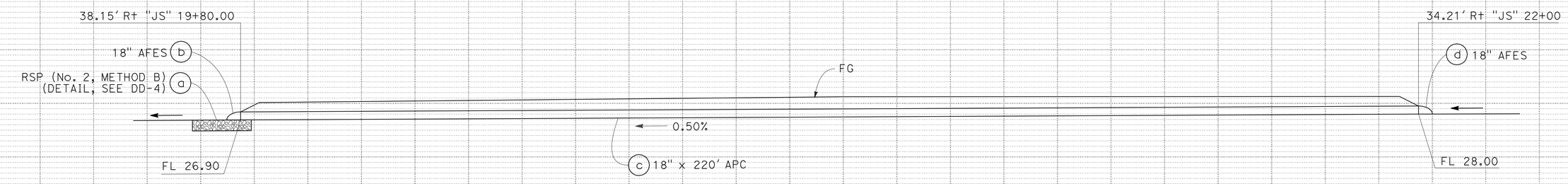

DRAINAGE SYSTEM No. 30

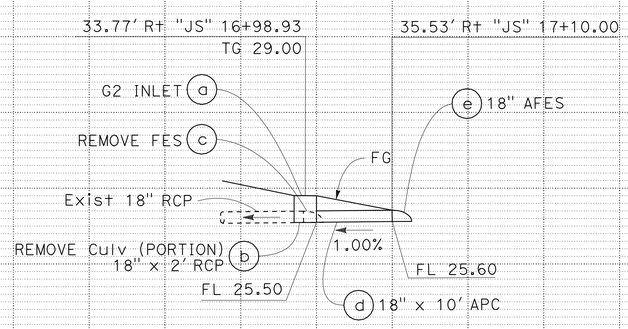

DRAINAGE SYSTEM No. 31

DRAINAGE PROFILES

SCALE: Horiz 1" = 10'
Vert 1" = 10'

DP-5

REVISED BY	DATE REVISED
XX	00/00/11

IRENE LIU — STEVEN NAGATA — CALCULATED-DESIGNED BY — CHECKED BY

CONSULTANT FUNCTIONAL SUPERVISOR: HAN-BIN LIANG

STATE OF CALIFORNIA - DEPARTMENT OF TRANSPORTATION — Caltrans

LAST REVISION 01-31-12 — DATE PLOTTED => 14-MAY-2012 — TIME PLOTTED => 10:33

Dist	COUNTY	ROUTE	POST MILES TOTAL PROJECT	SHEET No.	TOTAL SHEETS
04	Ala,SCl	680	0.0/0.1, 0.1/9.9	76	319

REGISTERED CIVIL ENGINEER 02/10/12 DATE

5-14-12
PLANS APPROVAL DATE

REGISTERED PROFESSIONAL ENGINEER HAN-BIN LIANG No. 48404 Exp. 6/30/12 CIVIL STATE OF CALIFORNIA

THE STATE OF CALIFORNIA OR ITS OFFICERS OR AGENTS SHALL NOT BE RESPONSIBLE FOR THE ACCURACY OR COMPLETENESS OF SCANNED COPIES OF THIS PLAN SHEET.

WRECO
1814 FRANKLIN STREET
SUITE 608
OAKLAND, CA 94612

CALTRANS
111 GRAND AVENUE
OAKLAND, CA 94612

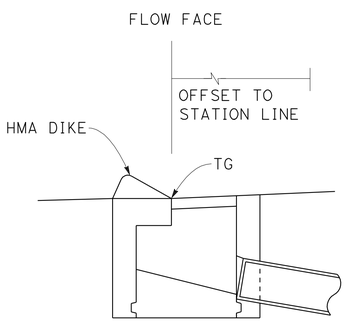

ELEVATION

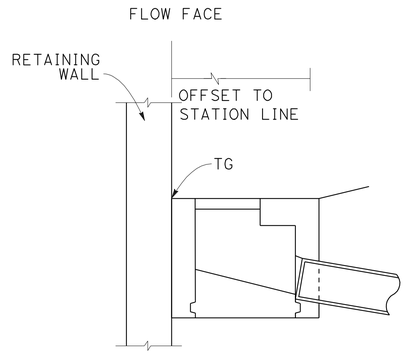

ELEVATION

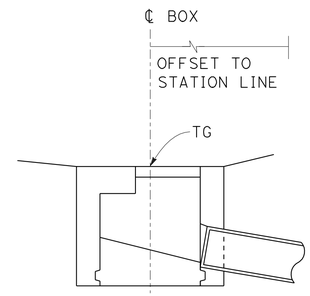

ELEVATION

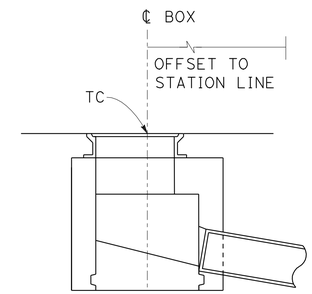

ELEVATION

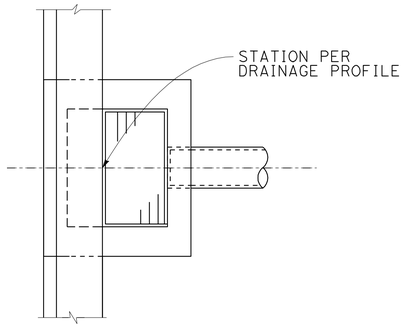

PLAN

INLET ADJACENT TO HMA DIKE

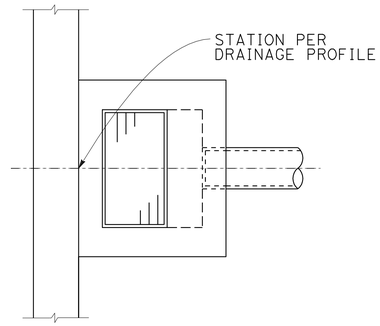

PLAN

INLET ADJACENT TO RETAINING WALL OR CONCRETE BARRIER TRANSITION

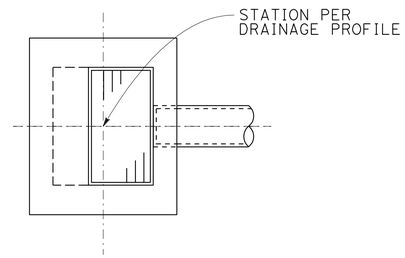

PLAN

FIELD INLET

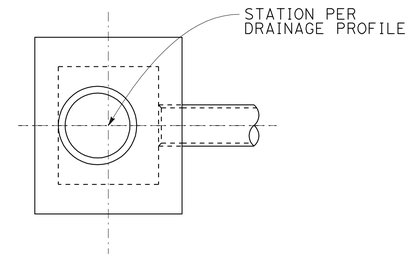

PLAN

FIELD MH

DRAINAGE DETAILS

NO SCALE

DD-1

STATE OF CALIFORNIA - DEPARTMENT OF TRANSPORTATION
Caltrans

CONSULTANT FUNCTIONAL SUPERVISOR: HAN-BIN LIANG
CALCULATED-DESIGNED BY: IRENE LIU
CHECKED BY: STEVEN NAGATA
REVISED BY: XX
DATE REVISED: 00/00/11

LAST REVISION 01-31-12
DATE PLOTTED => 14-MAY-2012
TIME PLOTTED => 10:20

Dist	COUNTY	ROUTE	POST MILES TOTAL PROJECT	SHEET No.	TOTAL SHEETS
04	Ala,SCl	680	0.0/0.1, 0.1/9.9	77	319

REGISTERED CIVIL ENGINEER 02/10/12 DATE

5-14-12
PLANS APPROVAL DATE

REGISTERED PROFESSIONAL ENGINEER HAN-BIN LIANG No. 48404 Exp. 6/30/12 CIVIL STATE OF CALIFORNIA

THE STATE OF CALIFORNIA OR ITS OFFICERS OR AGENTS SHALL NOT BE RESPONSIBLE FOR THE ACCURACY OR COMPLETENESS OF SCANNED COPIES OF THIS PLAN SHEET.

WRECO
1814 FRANKLIN STREET
SUITE 608
OAKLAND, CA 94612

CALTRANS
111 GRAND AVENUE
OAKLAND, CA 94612

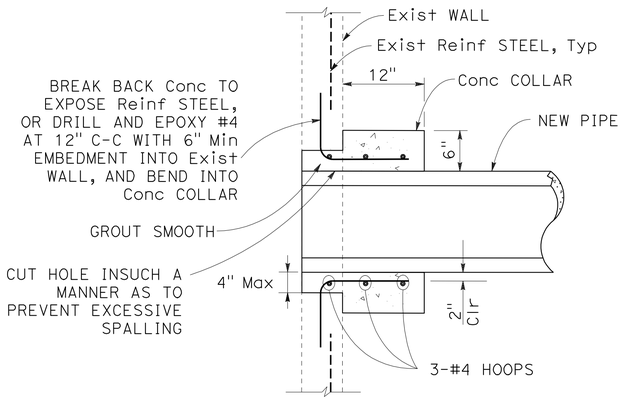

PIPE CONNECTION TO EXISTING DRAINAGE STRUCTURE

2 b 4 a 9 j 22 b 23 b

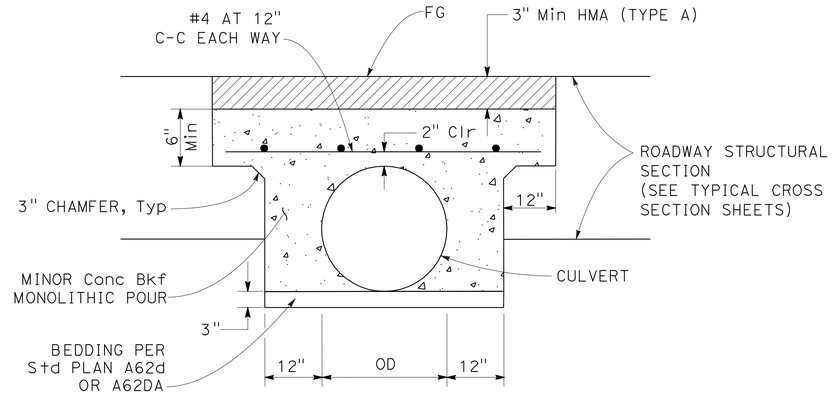

SECTION VIEW

NOTE:

TO BE USED FOR PIPE WHERE COVER IS LESS THAN 2.0'.

CONCRETE BACKFILL DETAIL

2 b 4 c e

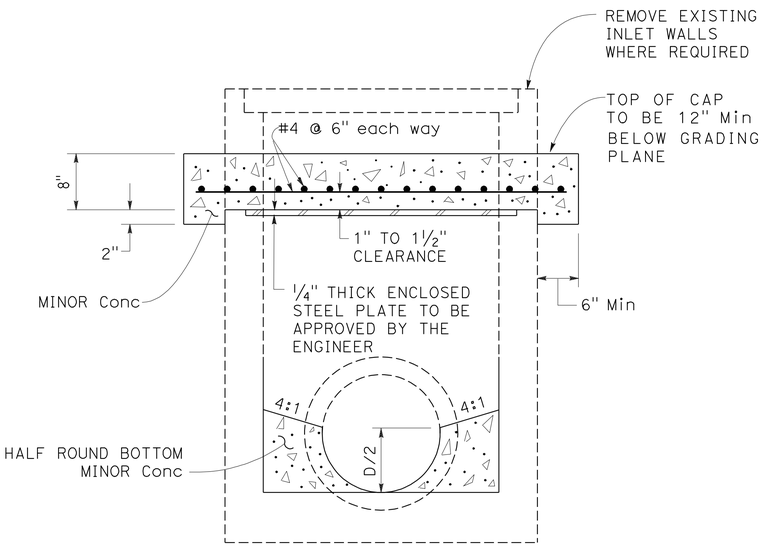

CAP DRAIN INLET

8 a 10 e

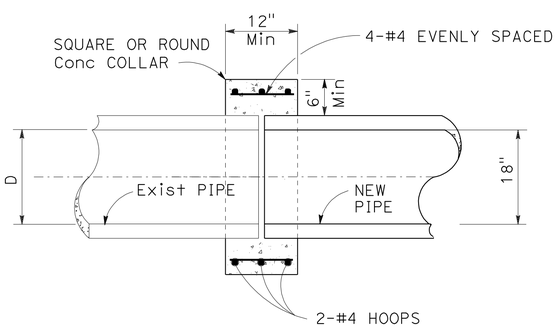

CONCRETE COLLAR

1 c 11 b 13 f 18 b 26 g 27 b 29 c

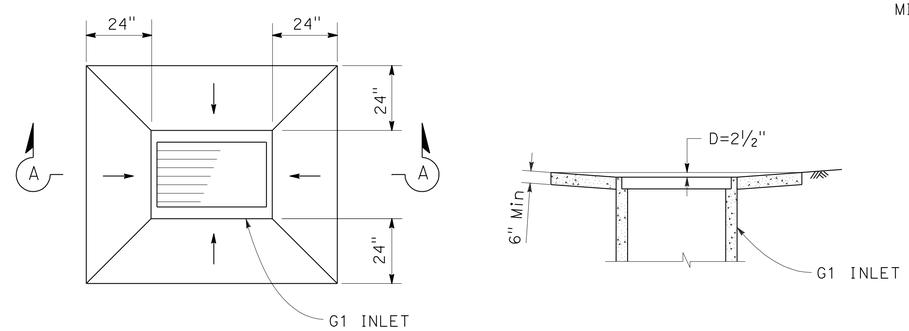

PLAN

SECTION A-A

G1 INLET WITH PCC APRON

3 d

DRAINAGE DETAILS

NO SCALE

DD-2

STATE OF CALIFORNIA - DEPARTMENT OF TRANSPORTATION
Caltrans

CONSULTANT FUNCTIONAL SUPERVISOR: HAN-BIN LIANG
CALCULATED-DESIGNED BY: IRENE LIU
CHECKED BY: STEVEN NAGATA
REVISED BY: XX
DATE REVISED: 00/00/11

LAST REVISION 01-31-12
DATE PLOTTED => 14-MAY-2012
TIME PLOTTED => 10:20

Dist	COUNTY	ROUTE	POST MILES TOTAL PROJECT	SHEET No.	TOTAL SHEETS
04	Ala,SCl	680	0.0/0.1, 0.1/9.9	78	319

REGISTERED CIVIL ENGINEER 02/10/12 DATE

5-14-12
PLANS APPROVAL DATE

REGISTERED PROFESSIONAL ENGINEER HAN-BIN LIANG No. 48404 Exp. 6/30/12 CIVIL STATE OF CALIFORNIA

THE STATE OF CALIFORNIA OR ITS OFFICERS OR AGENTS SHALL NOT BE RESPONSIBLE FOR THE ACCURACY OR COMPLETENESS OF SCANNED COPIES OF THIS PLAN SHEET.

WRECO
1814 FRANKLIN STREET
SUITE 608
OAKLAND, CA 94612

CALTRANS
111 GRAND AVENUE
OAKLAND, CA 94612

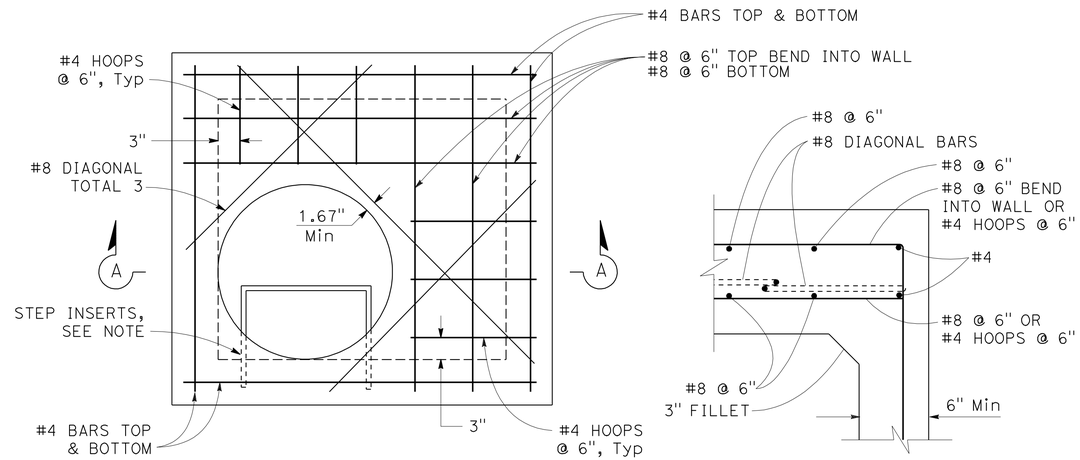

PLAN

DETAIL 1

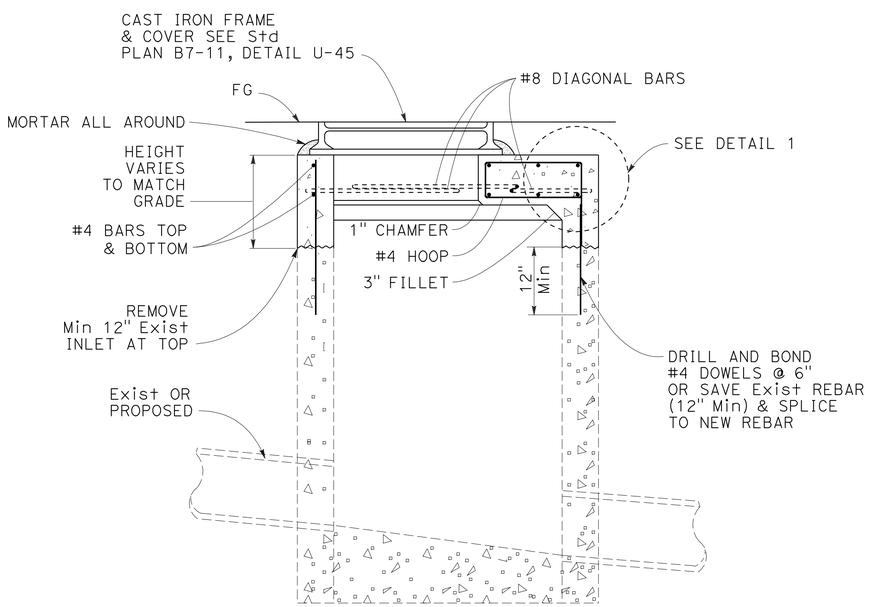

SECTION A-A

NOTE:

STEP INSERTS SHALL BE PLACED WITH LOWEST RUNG 12" ABOVE THE FLOOR AND HIGHEST RUNG NOT MORE THAN 6" BELOW THE TOP OF INLET. DISTANCE BETWEEN STEPS SHALL NOT EXCEED 12" AND SHALL BE UNIFORM THROUGHOUT THE LENGTH OF THE WALL. FOR STEP INSERT DETAILS NOT SHOWN, SEE Std PLAN D74C.

MODIFY INLET TO MANHOLE

2 a

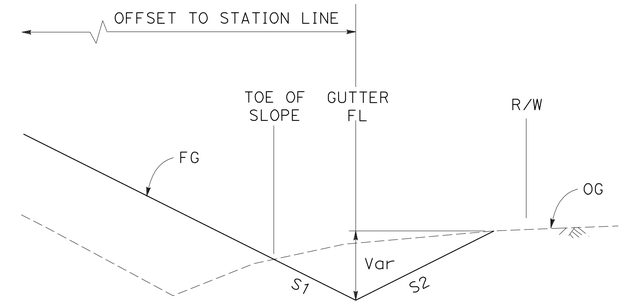

LOCATION	S1	S2
6.00' Lt "CAS" 10+88.08 TO 6.00' Lt "CAS" 12+80.00	4:1 OR FLATTER	2:1 OR FLATTER
36.95' Rt "JS" 17+13.98 TO 38.04' Rt "JS" 19+76.80	2:1 OR FLATTER	2:1 OR FLATTER
34.00' Rt "JS" 22+04.01 TO 33.55' Rt "JS" 23+80.37	2:1 OR FLATTER	2:1 OR FLATTER

UNLINED V-GUTTER

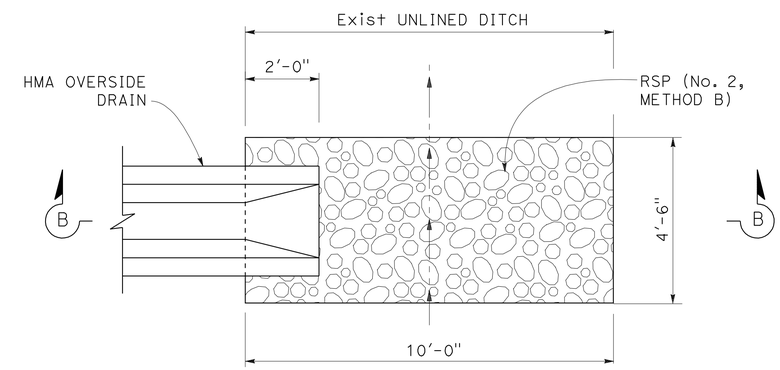

PLAN

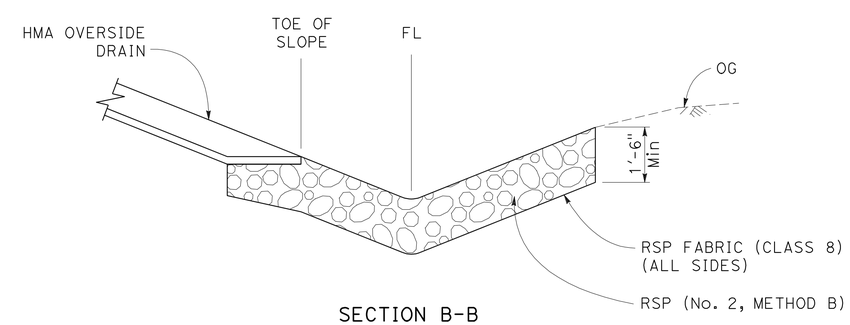

SECTION B-B

NOTE:

FOR DETAILS NOT SHOWN, SEE Std PLAN D87D.

RSP AT HMA OVERSIDE DRAIN

1 b 17 b 19 b 24 b 25 b 29 b 32 b

DRAINAGE DETAILS

NO SCALE

DD-3

STATE OF CALIFORNIA - DEPARTMENT OF TRANSPORTATION
Caltrans
CONSULTANT FUNCTIONAL SUPERVISOR HAN-BIN LIANG
CALCULATED-DESIGNED BY IRENE LIU
CHECKED BY STEVEN NAGATA
REVISED BY XX
DATE REVISED 00/00/11

LAST REVISION 01-31-12
DATE PLOTTED => 14-MAY-2012
TIME PLOTTED => 10:20

Dist	COUNTY	ROUTE	POST MILES TOTAL PROJECT	SHEET No.	TOTAL SHEETS
04	Ala,SCl	680	0.0/0.1, 0.1/9.9	79	319

REGISTERED CIVIL ENGINEER — DATE 02/10/12

5-14-12
PLANS APPROVAL DATE

REGISTERED PROFESSIONAL ENGINEER — HAN-BIN LIANG — No. 48404 — Exp. 6/30/12 — CIVIL — STATE OF CALIFORNIA

THE STATE OF CALIFORNIA OR ITS OFFICERS OR AGENTS SHALL NOT BE RESPONSIBLE FOR THE ACCURACY OR COMPLETENESS OF SCANNED COPIES OF THIS PLAN SHEET.

WRECO
1814 FRANKLIN STREET
SUITE 608
OAKLAND, CA 94612

CALTRANS
111 GRAND AVENUE
OAKLAND, CA 94612

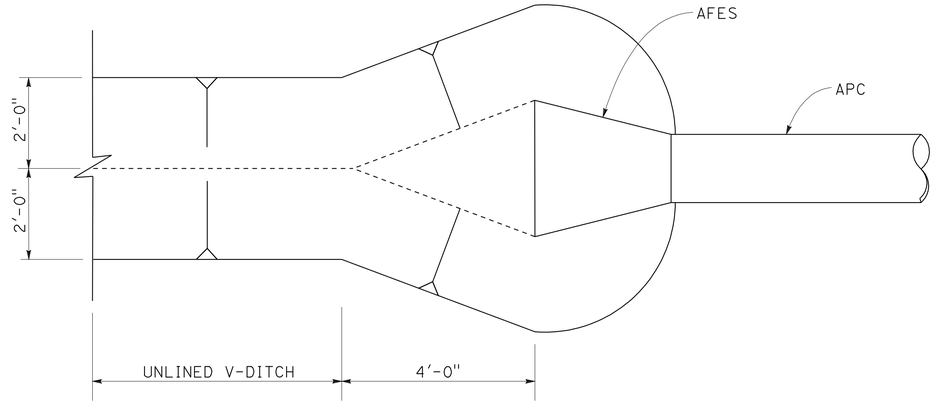

PLAN VIEW

DITCH TRANSITION AT AFES

30 b d 31 e

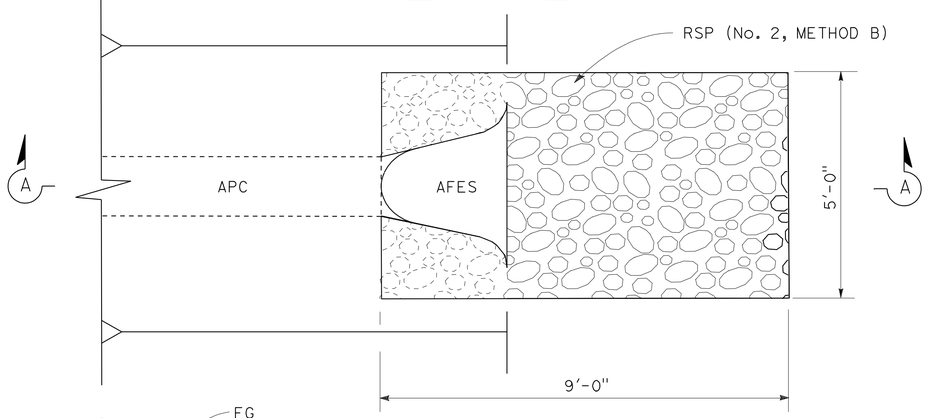

PLAN

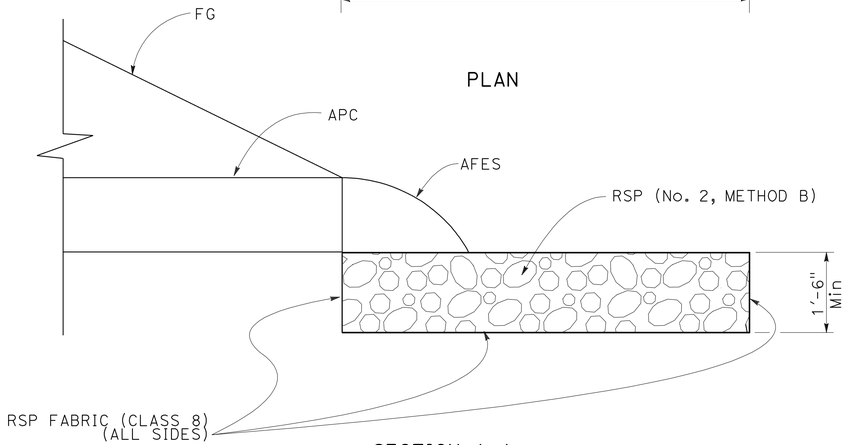

SECTION A-A

ROCK SLOPE PROTECTION AT AFES

1 f 15 d 18 d 20 d 29 f 30 a

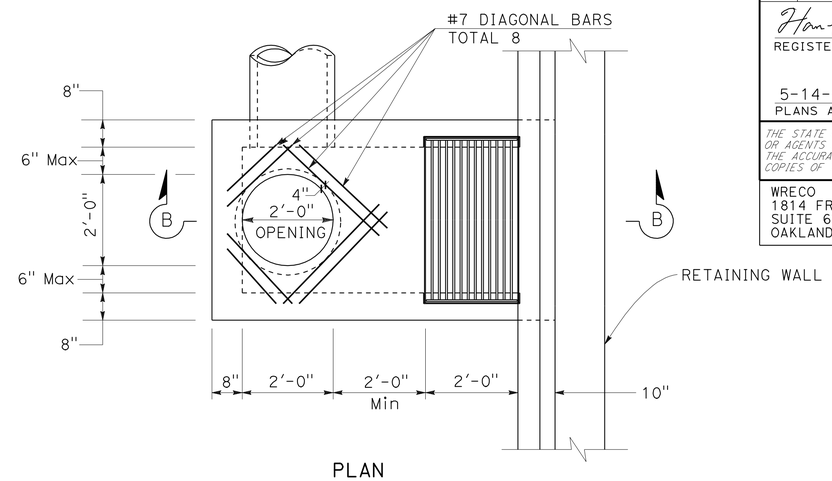

PLAN

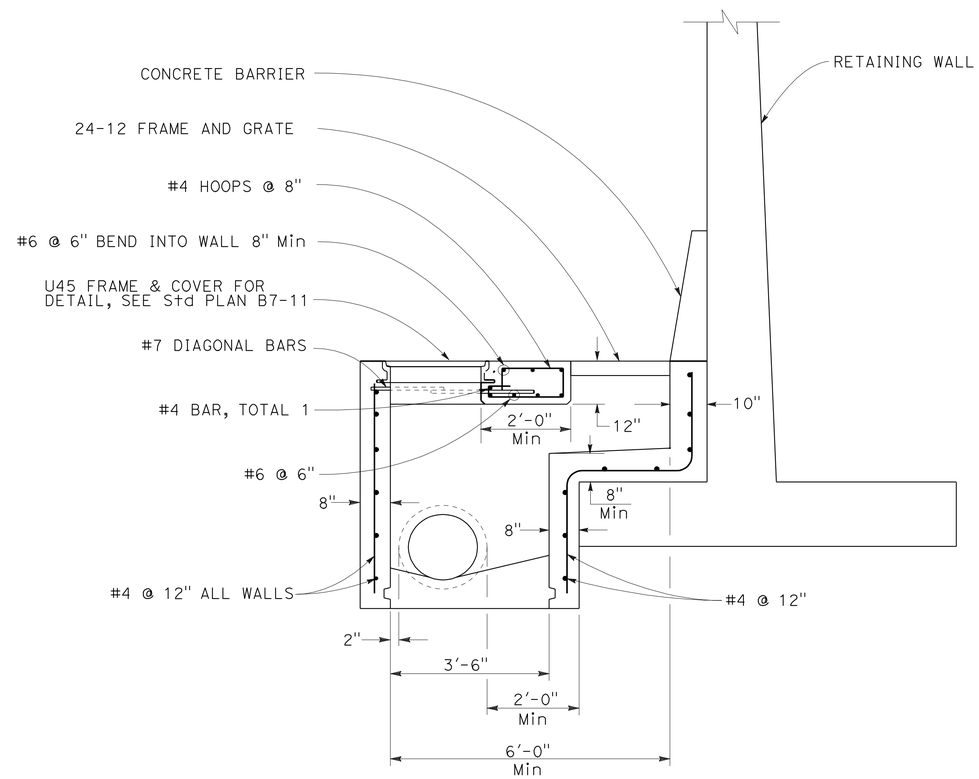

SECTION B-B

G2W INLET

9 e g i

DRAINAGE DETAILS

NO SCALE

DD-4

STATE OF CALIFORNIA - DEPARTMENT OF TRANSPORTATION — Caltrans

CONSULTANT FUNCTIONAL SUPERVISOR: HAN-BIN LIANG

CALCULATED-DESIGNED BY: IRENE LIU — CHECKED BY: STEVEN NAGATA

REVISED BY: XX — DATE REVISED: 00/00/11

LAST REVISION 01-31-12 — DATE PLOTTED => 14-MAY-2012 — TIME PLOTTED => 10:20

Dist	COUNTY	ROUTE	POST MILES TOTAL PROJECT	SHEET No.	TOTAL SHEETS
04	Ala,SCl	680	0.0/0.1, 0.1/9.9	80	319

REGISTERED CIVIL ENGINEER 02/10/12 DATE

5-14-12
PLANS APPROVAL DATE

REGISTERED PROFESSIONAL ENGINEER HAN-BIN LIANG No. 48404 Exp. 6/30/12 CIVIL STATE OF CALIFORNIA

THE STATE OF CALIFORNIA OR ITS OFFICERS OR AGENTS SHALL NOT BE RESPONSIBLE FOR THE ACCURACY OR COMPLETENESS OF SCANNED COPIES OF THIS PLAN SHEET.

WRECO
1814 FRANKLIN STREET
SUITE 608
OAKLAND, CA 94612

CALTRANS
111 GRAND AVENUE
OAKLAND, CA 94612

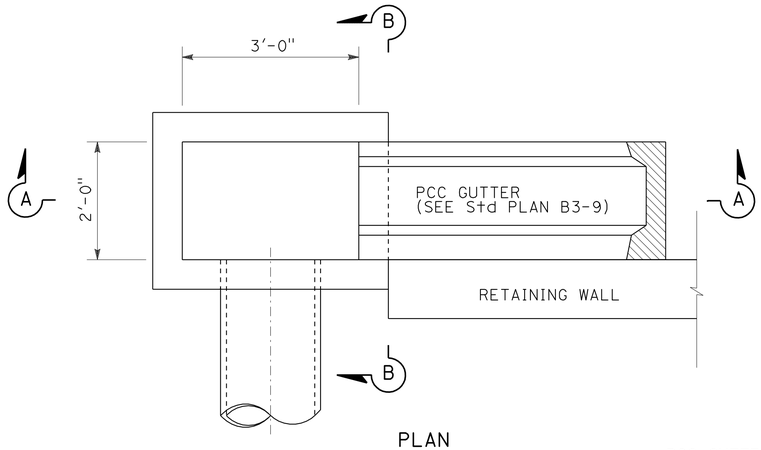

PLAN

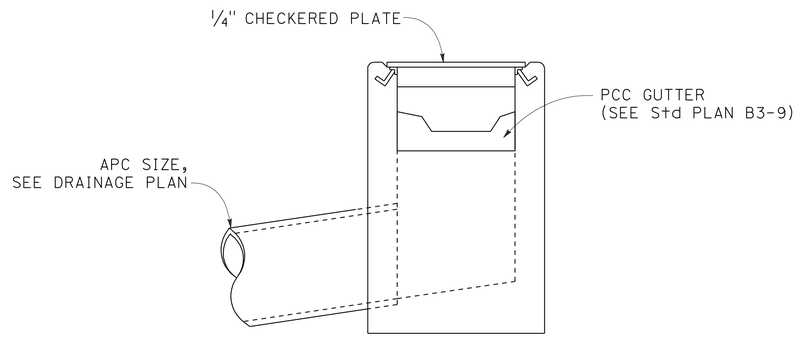

SECTION B-B

NOTE:

1. FOR DETAILS NOT SHOWN, SEE Std PLAN D72.

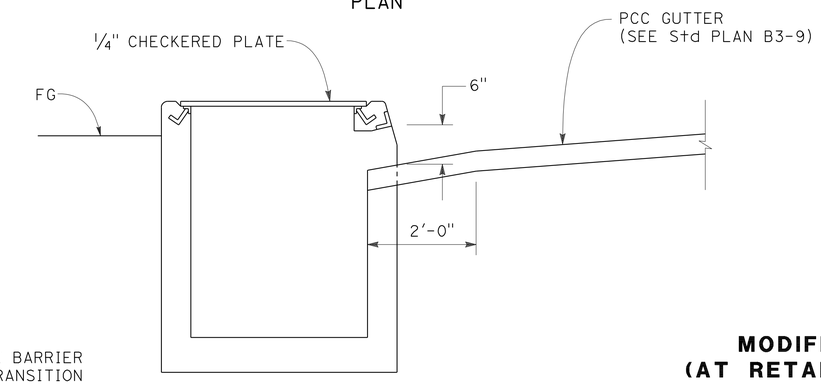

SECTION A-A

MODIFIED OS INLET (AT RETAINING WALL END)

9 c n

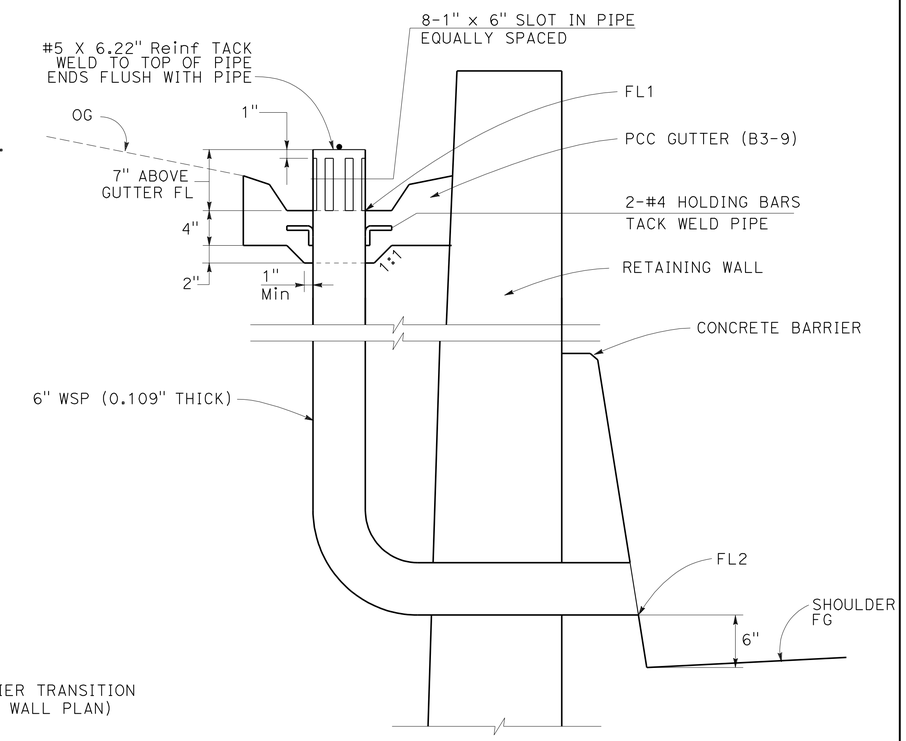

SYSTEM UNIT No.	STATION , OFFSET	FL1	FL2
6 a	37.10' Rt "ARS" 18+65.54	84.47	81.50

WSP WALL DRAIN (AT GRADE SAG)

6 a

NOTE:

STATION, OFFSET AND FLOW LINE ARE FOR INFORMATION ONLY. EXACT LOCATION AND ELEVATIONS TO BE DETERMINED BY ENGINEER.

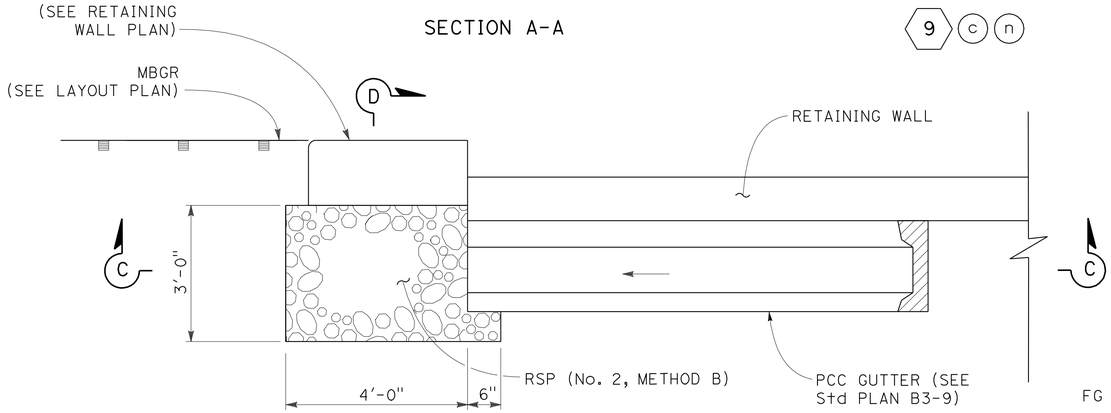

PLAN

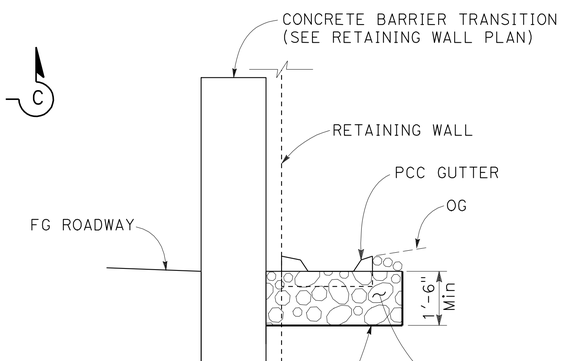

SECTION D-D

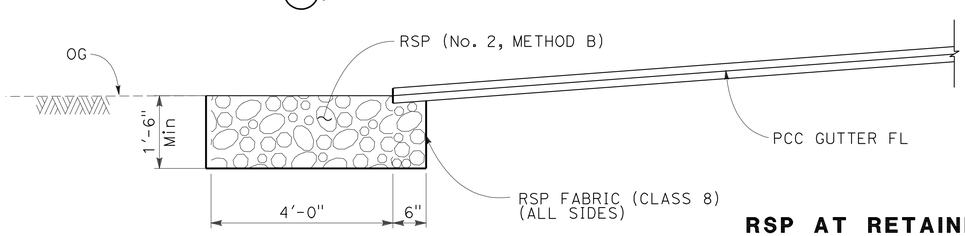

SECTION C-C

RSP AT RETAINING WALL END

7 a

DRAINAGE DETAILS

NO SCALE

DD-5

REVISED BY	DATE REVISED
XX	00/00/11

IRENE LIU — CALCULATED-DESIGNED BY
STEVEN NAGATA — CHECKED BY
HAN-BIN LIANG — CONSULTANT FUNCTIONAL SUPERVISOR

STATE OF CALIFORNIA - DEPARTMENT OF TRANSPORTATION

LAST REVISION 01-31-12 | DATE PLOTTED => 14-MAY-2012 | TIME PLOTTED => 10:21

Dist	COUNTY	ROUTE	POST MILES TOTAL PROJECT	SHEET No.	TOTAL SHEETS
04	Ala,SCl	680	0.0/0.1, 0.1/9.9	81	319

REGISTERED CIVIL ENGINEER 02/10/12 DATE

5-14-12
PLANS APPROVAL DATE

REGISTERED PROFESSIONAL ENGINEER HAN-BIN LIANG No. 48404 Exp. 6/30/12 CIVIL STATE OF CALIFORNIA

THE STATE OF CALIFORNIA OR ITS OFFICERS OR AGENTS SHALL NOT BE RESPONSIBLE FOR THE ACCURACY OR COMPLETENESS OF SCANNED COPIES OF THIS PLAN SHEET.

WRECO
1814 FRANKLIN STREET
SUITE 608
OAKLAND, CA 94612

CALTRANS
111 GRAND AVENUE
OAKLAND, CA 94612

NOTES:

1. FOR ABBREVIATIONS NOT SHOWN, SEE SHEET D-1.
2. BITUMINOUS COATING IS ON THE SOIL SIDE ONLY.
3. POLYMERIC SHEET COATING MAY BE SUBSTITUTED FOR BITUMINOUS COATING.

ABBREVIATIONS:

S - STANDARD JOINT TYPE
DD - DOWNDRAIN JOINT TYPE
P - POSITIVE JOINT TYPE
W - WATERTIGHT JOINT TYPE

APC ALLOWABLE PIPE MATERIAL AND PROTECTION

DESIGNATION	RCP	CSP Bit Ctd	PLASTIC PIPE SMOOTH INTERIOR
18" APC	YES	THICKNESS 0.079"	YES

DRAINAGE QUANTITIES

DRAINAGE SHEET No.	DRAINAGE SYSTEM No.	DRAINAGE UNIT	ABANDON CULVERT	ABANDON INLET	REMOVE FES	REMOVE CULVERT	REMOVE INLET	MODIFIY INLET TO MH	CAP INLET	SAND BACKFILL	(*) HMA (TYPE A)	PLACE HMA (Misc AREA)	MINOR CONCRETE MINOR STRUCTURE	MINOR CONCRETE BACKFILL	MINOR CONCRETE Misc CONSTRUCTION	Misc IRON AND STEEL	(N) FRAME AND GRATE (TYPE 24-12)	(N) FRAME AND GRATE (TYPE 24-12X)	(N) FRAME AND COVER (1/4" CHECKERED PLATE)	(N) FRAME AND COVER (TYPE U-45)	18" APC	DRAINAGE INLET MARKER	6" WSP (0.105" THICK)	18" AFES	ROCK SLOPE PROTECTION (No. 2, METHOD B)	ROCK SLOPE PROTECTION FABRIC (CLASS 8)	(N) CONCRETE COLLAR	(N) PIPE JOINT CLASSIFICATION	(N) MAXIMUM COVER	(N) HEIGHT OF INLET OR MANHOLE	DESCRIPTION	STATION	DRAINAGE SYSTEM No.	DRAINAGE UNIT
			LF	EA	EA	LF	EA	EA	EA	CY	TON	SQYD	CY	CY	CY	LB	EA	EA	EA	EA	LF	EA	LF	EA	CY	SQYD	EA		FT	FT				
D-1	1	a									0.3	0.6																			HMA OVERSIDE DRAIN	9.74′ R+ "JA" 20+40.00 TO 14.71′ R+ "JA" 20+40.57	1	a
		b																							2.5	10.8					RSP (No. 2, METHOD B)	14.71′ R+ "JA" 20+40.57		b
		c																			4							S	3.2		18" APC	20.30′ R+ "JA" 18+78.38 TO 24.39′ R+ "JA" 18+78.40		c
		d			1																										REMOVE FES	20.30′ R+ "JA" 18+78.38		d
		e																						1							18" AFES	24.39′ R+ "JA" 18+78.40		e
		f																							2.8	11.7					RSP (No. 2, METHOD B)	24.39′ R+ "JA" 18+78.40		f
D-2	2	a						1																							MODIFY INLET TO MH	23.21′ R+ "CES" 11+36.19	2	a
		b												8.7							71						1	S	2.9		18" APC w/ Conc Bkf	23.21′ R+ "CES" 11+36.19 TO 44.70′ R+ "CES" 12+08.22		b
		c											1.0			326	1													3.2	G1 INLET	44.70′ R+ "CES" 12+08.22		c
D-2	3	a											2.0			239		1				1								5.5	G2 INLET	4.00′ L+ "CEN" 14+53.90	3	a
		b				34																									REMOVE 18" PIPE Culv (PORTION)	4.00′ L+ "CEN" 14+53.90 TO 7.06′ L+ "CEN" 14+87.31		b
		c																			23							S	3.7		18" APC	4.00′ L+ "CEN" 14+53.90 TO 12.18′ L+ "CEN" 14+77.65		c
		d											1.0		0.8	239		1				1								3.2	G1 INLET w/ PCC APRON	12.18′ L+ "CEN" 14+77.65		d
		e					1																								REMOVE INLET	7.06′ L+ "CEN" 14+87.31		e
D-3	4	a																			36						1	S	1.5		18" APC	48.01′ R+ "CEN" 14+29.67 TO 33.75′ R+ "CEN" 14+70.00	4	a
		b											1.0			326	1													3.2	G1 INLET	33.75′ R+ "CEN" 14+70.00		b
		c												6.7							24							S	1.5		18" APC w/ Conc Bkf	33.75′ R+ "CEN" 14+70.00 TO 33.69′ R+ "CEN" 15+00.00		c
		d											1.0			326	1													3.0	G1 INLET	33.69′ R+ "CEN" 15+00.00		d
		e												3.6							13							S	1.3		18" APC w/ Conc Bkf	33.69′ R+ "CEN" 15+00.00 TO 33.56′ R+ "CEN" 15+18.00		e
		f											1.0			326	1													3.0	G1 INLET	33.56′ R+ "CEN" 15+18.00		f
D-3	5	a											1.6			326	1													4.0	G2 INLET	4.00′ L+ "ARS" 21+00.00	5	a
		b																			48							P	2.7		18" APC	4.00′ L+ "ARS" 21+00.00 TO 4.00′ L+ "ARS" 20+48.23		b
		c											3.7			326	1													8.5	G2 INLET	4.00′ L+ "ARS" 20+48.23		c
		d				4																									REMOVE 18" PIPE Culv (PORTION)	4.00′ L+ "ARS" 20+48.23 TO 1.15′ R+ "ARS" 20+49.48		d
		e					1																								REMOVE INLET	1.15′ R+ "ARS" 20+49.48		e
D-4	6	a																					6								WSP WALL DRAIN	37.10′ R+ "ARS" 18+65.54	6	a
D-4	7	a																							2.8	11.7					RSP (No. 2, METHOD B)	17.93′ R+ "ARS" 17+03.14	7	a
D-4	8	a							1																						CAP INLET	22.49′ R+ "ARS" 16+60.63	8	a
		b											2.4			326	1													7.2	G2 INLET	34.00′ R+ "ARS" 16+58.18		b
		c				3																									REMOVE 36" PIPE Culv (PORTION)	34.00′ R+ "ARS" 16+58.18 TO 34.00′ R+ "ARS" 16+58.18		c
					1	41	2	1	1		0.3	0.6	14.7	19.0	0.8	2,760	7	2			219	2	6	1	8.1	34.2	2				TOTAL (THIS SHEET)			

(N) - NOT A SEPARATE PAY ITEM, FOR INFORMATION ONLY.
(*) - QUANTITY INCLUDED IN SUMMARY OF QUANTITIES SHEETS.

DRAINAGE QUANTITIES

DQ-1

XX	00/00/11	IRENE LIU	STEVEN NAGATA
REVISED BY	DATE REVISED	CALCULATED-DESIGNED BY	CHECKED BY

CONSULTANT FUNCTIONAL SUPERVISOR: HAN-BIN LIANG

STATE OF CALIFORNIA - DEPARTMENT OF TRANSPORTATION

Caltrans

LAST REVISION 01-31-12 | DATE PLOTTED => 14-MAY-2012 | TIME PLOTTED => 13:29

Dist	COUNTY	ROUTE	POST MILES TOTAL PROJECT	SHEET No.	TOTAL SHEETS
04	Ala,SCl	680	0.0/0.1, 0.1/9.9	82	319

REGISTERED CIVIL ENGINEER 02/10/12 DATE

5-14-12
PLANS APPROVAL DATE

REGISTERED PROFESSIONAL ENGINEER HAN-BIN LIANG No. 48404 Exp. 6/30/12 CIVIL STATE OF CALIFORNIA

THE STATE OF CALIFORNIA OR ITS OFFICERS OR AGENTS SHALL NOT BE RESPONSIBLE FOR THE ACCURACY OR COMPLETENESS OF SCANNED COPIES OF THIS PLAN SHEET.

WRECO
1814 FRANKLIN STREET
SUITE 608
OAKLAND, CA 94612

CALTRANS
111 GRAND AVENUE
OAKLAND, CA 94612

DRAINAGE QUANTITIES

DRAINAGE SHEET No.	DRAINAGE SYSTEM No.	DRAINAGE UNIT	ABANDON CULVERT (LF)	ABANDON INLET (EA)	REMOVE FES (EA)	REMOVE CULVERT (LF)	REMOVE INLET (EA)	MODIFIY INLET TO MH (EA)	CAP INLET (EA)	SAND BACKFILL (CY)	(*) HMA (TYPE A) (TON)	PLACE HMA (Misc AREA) (SQYD)	MINOR CONCRETE: MINOR STRUCTURE (CY)	MINOR CONCRETE: BACKFILL (CY)	MINOR CONCRETE: Misc CONSTRUCTION (CY)	Misc IRON AND STEEL (LB)	(N) FRAME AND GRATE (TYPE 24-12) (EA)	(N) FRAME AND GRATE (TYPE 24-12X) (EA)	(N) FRAME AND COVER (1/4" CHECKERED PLATE) (EA)	(N) FRAME AND COVER (TYPE U-45) (EA)	18" APC (LF)	DRAINAGE INLET MARKER (EA)	6" WSP (0.105" THICK) (LF)	18" AFES (EA)	ROCK SLOPE PROTECTION (No. 2, METHOD B) (CY)	ROCK SLOPE PROTECTION FABRIC (CLASS 8) (SQYD)	(N) CONCRETE COLLAR (EA)	(N) PIPE JOINT CLASSIFICATION	(N) MAXIMUM COVER (FT)	(N) HEIGHT OF INLET OR MANHOLE (FT)	DESCRIPTION	STATION	DRAINAGE SYSTEM No.	DRAINAGE UNIT
D-4	9	a											1.8			326	1													4.8	G2 INLET	34.00′ R+ "ARN" 15+11.80	9	a
		b																			2							S, W	4.3		18" APC	34.00′ R+ "ARN" 15+11.80 TO 36.77′ R+ "ARN" 15+11.80		b
		c											2.3			174			1											6.0	MODIFIED OS INLET	36.77′ R+ "ARN" 15+11.80		c
		d																			89							S, W	3.1		18" APC	34.00′ R+ "ARN" 15+11.80 TO 39.94′ R+ "ARN" 16+05.00		d
		e											2.0			761	1			1										4.5	G2W INLET	39.94′ R+ "ARN" 16+05.00		e
		f																			44							S, W	5.9		18" APC	39.94′ R+ "ARN" 16+05.00 TO 40.10′ R+ "ARN" 16+52.82		f
		g											2.0			761	1			1										4.7	G2W INLET	40.10′ R+ "ARN" 16+52.82		g
		h																			46							S, W	3.6		18" APC	40.10′ R+ "ARN" 16+52.82 TO 37.63′ R+ "ARN" 17+03.00		h
		i											2.2			761	1			1										5.4	G2W INLET	37.63′ R+ "ARN" 17+03.00		i
		j																			14						1	S, W	4.2		18" APC	20.75′ R+ "ARN" 17+03.56 TO 37.63′ R+ "ARN" 17+03.00		j
		k																			194							S, W	2.7		18" APC	37.63′ R+ "ARN" 17+03.00 TO 23.83′ R+ "ARN" 19+01.88		k
		l											1.7			326	1													4.4	G2 INLET	23.83′ R+ "ARN" 19+01.88		l
		m																			2							P, W	3.3		18" APC	23.83′ R+ "ARN" 19+01.88 TO 27.07′ R+ "ARN" 19+02.14		m
		n											1.8			174			1											4.3	MODIFIED OS INLET	27.07′ R+ "ARN" 19+02.14		n
D-4	10	a		1																											Abn INLET	21.10′ R+ "ARN" 16+05.03	10	a
		b	44							2.9																					Abn 18" Culv	22.10′ R+ "ARN" 16+06.03 TO 21.27′ R+ "ARN" 16+52.73		b
		c		1																											Abn INLET	21.27′ R+ "ARN" 16+52.73		c
		d	47							3.1																					Abn 18" Culv	22.27′ R+ "ARN" 16+53.73 TO 20.75′ R+ "ARN" 17+03.56		d
		e							1																						CAP INLET	20.75′ R+ "ARN" 17+03.56		e
D-5	11	a					1																								REMOVE INLET	11.30′ R+ "MKS" 20+47.62	11	a
		b																			9						1	S, W	3.6		18" APC	11.30′ R+ "MKS" 20+47.62 TO 20.00′ R+ "MKS" 20+46.67		b
		c											1.8			326	1													4.8	G2 INLET	20.00′ R+ "MKS" 20+46.67		c
D-6	12	a					1																								REMOVE INLET	17.87′ R+ "MKN" 11+27.49	12	a
		b				31																									REMOVE 18" PIPE Culv	17.87′ R+ "MKN" 11+27.49 TO 16.97′ R+ "MKN" 11+63.32		b
		c					1																								REMOVE INLET	16.97′ R+ "MKN" 11+63.32		c
		d				37																									REMOVE 18" PIPE Culv	16.97′ R+ "MKN" 11+63.32 TO 16.29′ R+ "MKN" 12+06.14		d
		e					1																								REMOVE INLET	16.29′ R+ "MKN" 12+06.14		e
D-6	13	a											1.6			326	1													4.1	G2 INLET	20.00′ R+ "MKN" 11+27.50	13	a
		b																			31							S, W	2.3		18" APC	20.00′ R+ "MKN" 11+27.50 TO 20.00′ R+ "MKN" 11+63.32		b
		c											1.6			326	1													4.0	G2 INLET	20.00′ R+ "MKN" 11+63.32		c
		d																			35							S, W	3.1		18" APC	20.00′ R+ "MKN" 11+63.32 TO 20.00′ R+ "MKN" 12+04.12		d
		e											1.8			326	1													4.9	G2 INLET	20.00′ R+ "MKN" 12+04.12		e
		f																			9						1	S, W	3.6		18" APC	16.29′ R+ "MKN" 12+06.14 TO 20.00′ R+ "MKN" 12+04.12		f
D-6	14	a					1																								REMOVE INLET	11.70′ R+ "MKN" 17+40.66	14	a
		b				9																									REMOVE 18" PIPE Culv (PORTION)	11.70′ R+ "MKN" 17+40.66 TO 20.00′ R+ "MKN" 17+40.61		b
		c											2.1			326	1													6.0	G2 INLET	20.00′ R+ "MKN" 17+40.61		c
			91	2		77	5		1	6.0			22.7			4,913	10		2	3	475						3				TOTAL (THIS SHEET)			

(N) - NOT A SEPARATE PAY ITEM, FOR INFORMATION ONLY.
(*) - QUANTITY INCLUDED IN SUMMARY OF QUANTITIES SHEETS.

DRAINAGE QUANTITIES

DQ-2

REVISED BY	DATE REVISED
XX	00/00/11

IRENE LIU — STEVEN NAGATA — CALCULATED-DESIGNED BY — CHECKED BY
CONSULTANT FUNCTIONAL SUPERVISOR: HAN-BIN LIANG

STATE OF CALIFORNIA - DEPARTMENT OF TRANSPORTATION

LAST REVISION 01-31-12 — DATE PLOTTED => 14-MAY-2012 — TIME PLOTTED => 10:19

Dist	COUNTY	ROUTE	POST MILES TOTAL PROJECT	SHEET No.	TOTAL SHEETS
04	Ala,SCl	680	0.0/0.1, 0.1/9.9	83	319

REGISTERED CIVIL ENGINEER 02/10/12 DATE

5-14-12
PLANS APPROVAL DATE

REGISTERED PROFESSIONAL ENGINEER HAN-BIN LIANG No. 48404 Exp. 6/30/12 CIVIL STATE OF CALIFORNIA

THE STATE OF CALIFORNIA OR ITS OFFICERS OR AGENTS SHALL NOT BE RESPONSIBLE FOR THE ACCURACY OR COMPLETENESS OF SCANNED COPIES OF THIS PLAN SHEET.

WRECO
1814 FRANKLIN STREET
SUITE 608
OAKLAND, CA 94612

CALTRANS
111 GRAND AVENUE
OAKLAND, CA 94612

DRAINAGE QUANTITIES

DRAINAGE SHEET No.	DRAINAGE SYSTEM No.	DRAINAGE UNIT	ABANDON CULVERT (LF)	ABANDON INLET (EA)	REMOVE FES (EA)	REMOVE CULVERT (LF)	REMOVE INLET (EA)	MODIFIY INLET TO MH (EA)	CAP INLET (EA)	SAND BACKFILL (CY)	(*) HMA (TYPE A) (TON)	PLACE HMA (Misc AREA) (SQYD)	MINOR CONCRETE MINOR STRUCTURE (CY)	MINOR CONCRETE BACKFILL (CY)	MINOR CONCRETE Misc CONSTRUCTION (CY)	Misc IRON AND STEEL (LB)	(N) FRAME AND GRATE (TYPE 24-12) (EA)	(N) FRAME AND GRATE (TYPE 24-12X) (EA)	(N) FRAME AND COVER (1/4" CHECKERED PLATE) (EA)	(N) FRAME AND COVER (TYPE U-45) (EA)	18" APC (LF)	DRAINAGE INLET MARKER (EA)	6" WSP (0.105" THICK) (LF)	18" AFES (EA)	ROCK SLOPE PROTECTION (No. 2, METHOD B) (CY)	ROCK SLOPE PROTECTION FABRIC (CLASS 8) (SQYD)	(N) CONCRETE COLLAR (EA)	(N) PIPE JOINT CLASSIFICATION	(N) MAXIMUM COVER (FT)	(N) HEIGHT OF INLET OR MANHOLE (FT)	DESCRIPTION	STATION	DRAINAGE SYSTEM No.	DRAINAGE UNIT
D-7	15	a											1.4			326	1													3.4	G2 INLET	20.00′ R† "BS" 19+73.00	15	a
		b																			6							P	1.7		18" APC	20.00′ R† "BS" 19+73.00 TO 25.98′ R† "BS" 19+73.00		b
		c																						1							18" AFES	25.98′ R† "BS" 19+73.00		c
		d																							2.8	11.7					RSP (No. 2, METHOD B)	25.98′ R† "BS" 19+73.00		d
D-7	16	a					1																								REMOVE INLET	9.52′ R† "BS" 19+73.05	16	a
		b				18																									REMOVE 12" PIPE Culv	9.52′ R† "BS" 19+73.05 TO 27.50′ R† "BS" 19+72.22		b
		c			1																										REMOVE FES	27.50′ R† "BS" 19+72.22		c
D-7	17	a									0.8	1.6																			HMA OVERSIDE DRAIN	20.00′ R† "BS" 17+00.00 TO 33.00′ R† "BS" 17+00.00	17	a
		b																							2.5	10.8					RSP (No. 2, METHOD B)	33.00′ R† "BS" 17+00.00		b
D-8	18	a			1																										REMOVE FES	32.08′ R† "BN" 18+96.51	18	a
		b																			2						1	S	0.2		18" APC	32.08′ R† "BN" 18+96.51 TO 33.99′ R† "BN" 18+96.52		b
		c																						1							18" AFES	33.99′ R† "BN" 18+96.52		c
		d																							2.8	11.7					RSP (No. 2, METHOD B)	33.99′ R† "BN" 18+96.52		d
D-8	19	a									1.0	2.1																			HMA OVERSIDE DRAIN	73.64′ R† "CL" 315+09.46 TO 90.46′ R† "CL" 315+11.16	19	a
		b																							2.5	10.8					RSP (No. 2, METHOD B)	90.46′ R† "CL" 315+11.16		b
D-9	20	a											1.5			326	1													3.8	G2 INLET	8.00′ R† "HT" 23+20.00	20	a
		b																			9							S	2.0		18" APC	8.00′ R† "HT" 23+20.00 TO 16.63′ R† "HT" 23+20.00		b
		c																						1							18" AFES	16.63′ R† "HT" 23+20.00		c
		d																							2.8	11.7					RSP (No. 2, METHOD B)	16.63′ R† "HT" 23+20.00		d
D-10	21	a					1																								REMOVE INLET	30.31′ R† "CAS" 16+18.75	21	a
		b				2																									REMOVE 12" CSP (PORTION)	32.00′ R† "CAS" 16+18.75 TO 32.00′ R† "CAS" 16+18.75		b
		c											1.6			326	1													4.3	G2 INLET	32.00′ R† "CAS" 16+18.75		c
		d																			38							S	2.7		18" APC	32.00′ R† "CAS" 16+18.75 TO 32.00′ R† "CAS" 16+60.00		d
		e											1.7			326	1													4.4	G2 INLET	32.00′ R† "CAS" 16+60.00		e
D-11	22	a											1.6			239		1				1								4.0	G2 INLET	4.00′ L† "CAN1" 10+20.00	22	a
		b																			51						1	S	2.3		18" APC	4.00′ L† "CAN1" 10+20.00 TO 56.63′ L† "CAN1" 10+22.95		b
D-12	23	a											1.5			326	1													3.6	G2 INLET	10.04′ L† "CAN1" 21+40.00	23	a
		b																			272						1	S	2.1		18" APC	10.04′ L† "CAN1" 21+40.00 TO 8.66′ L† "CAN1" 24+15.33		b
D-12	24	a									0.8	1.7																			HMA OVERSIDE DRAIN	26.85′ R† "CAN1" 25+80.00 TO 40.78′ R† "CAN1" 25+81.40	24	a
		b																							2.5	10.8					RSP (No. 2, METHOD B)	40.78′ R† "CAN1" 25+81.40		b
			2		1	20	2				2.6	5.4	9.3			1,869	5	1			378	1		3	15.9	67.5	3				TOTAL (THIS SHEET)			

(N) - NOT A SEPARATE PAY ITEM, FOR INFORMATION ONLY.
(*) - QUANTITY INCLUDED IN SUMMARY OF QUANTITIES SHEETS.

DRAINAGE QUANTITIES

DQ-3

REVISED BY XX
DATE REVISED 00/00/11
IRENE LIU
STEVEN NAGATA
CALCULATED-DESIGNED BY
CHECKED BY
CONSULTANT FUNCTIONAL SUPERVISOR HAN-BIN LIANG
STATE OF CALIFORNIA - DEPARTMENT OF TRANSPORTATION
Caltrans

LAST REVISION DATE PLOTTED => 14-MAY-2012
01-31-12 TIME PLOTTED => 10:19

Dist	COUNTY	ROUTE	POST MILES TOTAL PROJECT	SHEET No.	TOTAL SHEETS
04	Ala,SCl	680	0.0/0.1, 0.1/9.9	84	319

REGISTERED CIVIL ENGINEER 02/10/12 DATE

5-14-12
PLANS APPROVAL DATE

REGISTERED PROFESSIONAL ENGINEER HAN-BIN LIANG No. 48404 Exp. 6/30/12 CIVIL STATE OF CALIFORNIA

THE STATE OF CALIFORNIA OR ITS OFFICERS OR AGENTS SHALL NOT BE RESPONSIBLE FOR THE ACCURACY OR COMPLETENESS OF SCANNED COPIES OF THIS PLAN SHEET.

WRECO
1814 FRANKLIN STREET
SUITE 608
OAKLAND, CA 94612

CALTRANS
111 GRAND AVENUE
OAKLAND, CA 94612

DRAINAGE QUANTITIES

DRAINAGE SHEET No.	DRAINAGE SYSTEM No.	DRAINAGE UNIT	ABANDON CULVERT (LF)	ABANDON INLET (EA)	REMOVE FES (EA)	REMOVE CULVERT (LF)	REMOVE INLET (EA)	MODIFIY INLET TO MH (EA)	CAP INLET (EA)	SAND BACKFILL (CY)	(*) HMA (TYPE A) (TON)	PLACE HMA (Misc AREA) (SQYD)	MINOR CONCRETE MINOR STRUCTURE (CY)	MINOR CONCRETE BACKFILL (CY)	MINOR CONCRETE Misc CONSTRUCTION (CY)	Misc IRON AND STEEL (LB)	(N) FRAME AND GRATE (TYPE 24-12) (EA)	(N) FRAME AND GRATE (TYPE 24-12X) (EA)	(N) FRAME AND COVER (1/4" CHECKERED PLATE) (EA)	(N) FRAME AND COVER (TYPE U-45) (EA)	18" APC (LF)	DRAINAGE INLET MARKER (EA)	6" WSP (0.105" THICK) (LF)	18" AFES (EA)	ROCK SLOPE PROTECTION (No. 2, METHOD B) (CY)	ROCK SLOPE PROTECTION FABRIC (CLASS 8) (SQYD)	(N) CONCRETE COLLAR (EA)	(N) PIPE JOINT CLASSIFICATION	(N) MAXIMUM COVER (FT)	(N) HEIGHT OF INLET OR MANHOLE (FT)	DESCRIPTION	STATION	DRAINAGE SYSTEM No.	DRAINAGE UNIT
D-13	25	a									0.8	1.7																			HMA OVERSIDE DRAIN	20.00' R+ "LDS" 19+60.00 TO 32.63' R+ "LDS" 19+60.00	25	a
		b																							2.5	10.8					RSP (No. 2, METHOD B)	20.00' R+ "LDS" 19+60.00		b
D-14	26	a											1.7			326	1													4.4	G2 INLET	20.00' R+ "LDN" 16+44.00	26	a
		b																			35							S, W	2.8		18" APC	20.00' R+ "LDN" 16+44.00 TO 20.00' R+ "LDN" 16+84.45		b
		c											1.9			326	1													5.2	G2 INLET	20.00' R+ "LDN" 16+84.45		c
		d																			35							S, W	2.8		18" APC	20.00' R+ "LDN" 16+84.45 TO 20.00' R+ "LDN" 17+25.00		d
		e											1.7			326	1													4.4	G2 INLET	20.00' R+ "LDN" 17+25.00		e
		f					1																								REMOVE INLET	18.17' R+ "LDN" 16+84.45		f
		g																			2						1	P, W	3.7		18" APC	18.17' R+ "LDN" 16+84.45 TO 20.00' R+ "LDN" 16+84.45		g
D-14	27	a					1																								REMOVE INLET	13.87' R+ "LDN" 19+08.10	27	a
		b																			7						1	S, W	4.0		18" APC	13.87' R+ "LDN" 19+08.10 TO 20.00' R+ "LDN" 19+08.00		b
		c											1.9			326	1													5.4	G2 INLET	20.00' R+ "LDN" 19+08.00		c
D-15	28	a									0.8	1.6																			HMA OVERSIDE DRAIN	20.00' R+ "CS" 28+00.00 TO 32.44' R+ "CS" 28+00.00	28	a
D-16	29	a									0.5	1.1																			HMA OVERSIDE DRAIN	20.00' R+ "CN" 30+74.00 TO 29.00' R+ "CN" 30+74.00	29	a
		b																							2.5	10.8					RSP (No. 2, METHOD B)	29.00' R+ "CN" 30+74.00		b
		c																			4							S	2.2		18" APC	20.00' R+ "CN" 28+51.98 TO 27.42' R+ "CN" 28+51.98		c
		d			1																										REMOVE FES	23.98' R+ "CN" 28+51.98		d
		e																						1							18" AFES	27.42' R+ "CN" 28+51.98		e
		f																							2.8	11.7					RSP (No. 2, METHOD B)	27.42' R+ "CN" 28+51.98		f
D-17	30	a																							2.8	11.7					RSP (No. 2, METHOD B)	38.15' R+ "JS" 19+80.00	30	a
		b																						1							18" AFES	38.15' R+ "JS" 19+80.00		b
		c																			220							S	1.5		18" APC	38.15' R+ "JS" 19+80.00 TO 34.21' R+ "JS" 22+00.00		c
		d																						1							18" AFES	34.21' R+ "JS" 22+00.00		d
D-17	31	a											1.4			326	1													3.5	G2 INLET	33.77' R+ "JS" 16+98.93	31	a
		b				2																									REMOVE 18" RCP (PORTION)	31.77' R+ "JS" 16+98.93 TO 33.77' R+ "JS" 16+98.93		b
		c			1																										REMOVE FES	33.77' R+ "JS" 16+98.93		c
		d																			10							S	1.8		18" APC	33.77' R+ "JS" 16+98.93 TO 35.53' R+ "JS" 17+10.00		d
		e																						1							18" AFES	35.53' R+ "JS" 17+10.00		e
D-17	32	a									0.6	1.3																			HMA OVERSIDE DRAIN	20.00' R+ "JS" 22+06.50 TO 30.35' R+ "JS" 22+07.67	32	a
		b																							2.5	10.8					RSP (No. 2, METHOD B)	30.55' R+ "JS" 22+07.67		b
D-17	33	a											2.1			326	1													6.2	G2 INLET	8.00' R+ "JS" 17+00.00	33	a
		b																			12							P	4.5		18"APC	8.00' R+ "JS" 17+00.00 TO 33.77' R+ "JS" 16+98.93		b
					2	2	2				2.7	5.7	10.7			1,956	6				329			4	13.1	55.8	2				TOTAL (THIS SHEET)			
					1	41	2	1	1		0.3	0.6	14.7	19.0	0.8	2,760	7	2			219	2	6	1	8.1	34.2	2				TOTAL (FROM DQ-1)			
			91	2		77	5		1	6.0			22.7			4,913	10		2	3	475						3				TOTAL (FROM DQ-2)			
					2	20	2				2.6	5.4	9.3			1,869	5	1			378	1		3	15.9	67.5	3				TOTAL (FROM DQ-3)			
			91	2	5	140	11	1	2	6.0	5.6	11.7	57.4	19.0	0.8	11,498	28	3	2	3	1,397	3	6	8	37.1	157.5	10				GRAND TOTAL			

(N) - NOT A SEPARATE PAY ITEM, FOR INFORMATION ONLY.
(*) - QUANTITY INCLUDED IN SUMMARY OF QUANTITIES SHEETS.

DRAINAGE QUANTITIES

DQ-4

STATE OF CALIFORNIA - DEPARTMENT OF TRANSPORTATION
Caltrans

CONSULTANT FUNCTIONAL SUPERVISOR: HAN-BIN LIANG
CALCULATED-DESIGNED BY: IRENE LIU
CHECKED BY: STEVEN NAGATA
REVISED BY: XX
DATE REVISED: 00/00/11

LAST REVISION 01-31-12
DATE PLOTTED => 15-MAY-2012
TIME PLOTTED => 11:07

Dist	COUNTY	ROUTE	POST MILES TOTAL PROJECT	SHEET No.	TOTAL SHEETS
04	Ala,SCl	680	0.0/0.1, 0.1/9.9	85	319

REGISTERED CIVIL ENGINEER 2-13-12 DATE

5-14-12
PLANS APPROVAL DATE

REGISTERED PROFESSIONAL ENGINEER Rostam Pouroushasb No. 58173 Exp. 6-30-12 CIVIL STATE OF CALIFORNIA

THE STATE OF CALIFORNIA OR ITS OFFICERS OR AGENTS SHALL NOT BE RESPONSIBLE FOR THE ACCURACY OR COMPLETENESS OF SCANNED COPIES OF THIS PLAN SHEET.

NOTE:

FOR ACCURATE RIGHT OF WAY DATA, CONTACT RIGHT OF WAY ENGINEERING AT THE DISTRICT OFFICE.

POTHOLE CHART

POTHOLE No.	OWNER	FACILITY	NORTHING	EASTING	GROUND Elev	DEPTH
1	AT & T	ELECTRICAL	1956066.779	6171835.953	82.68′	7.33′
2	AT & T	ELECTRICAL	1956072.993	6171861.494	83.00′	7.25′
3	AT & T	ELECTRICAL	1956063.326	6171824.891	88.39′	8.66′

LEGEND:

POTHOLE

POTHOLE NUMBER

UTILITIES	EXISTING UTILITIES	OWNERSHIP
GAS	--g———-———-g-	PG&E
TELEPHONE	--t———-———--t-	TELEPHONE LINE (AT&T)

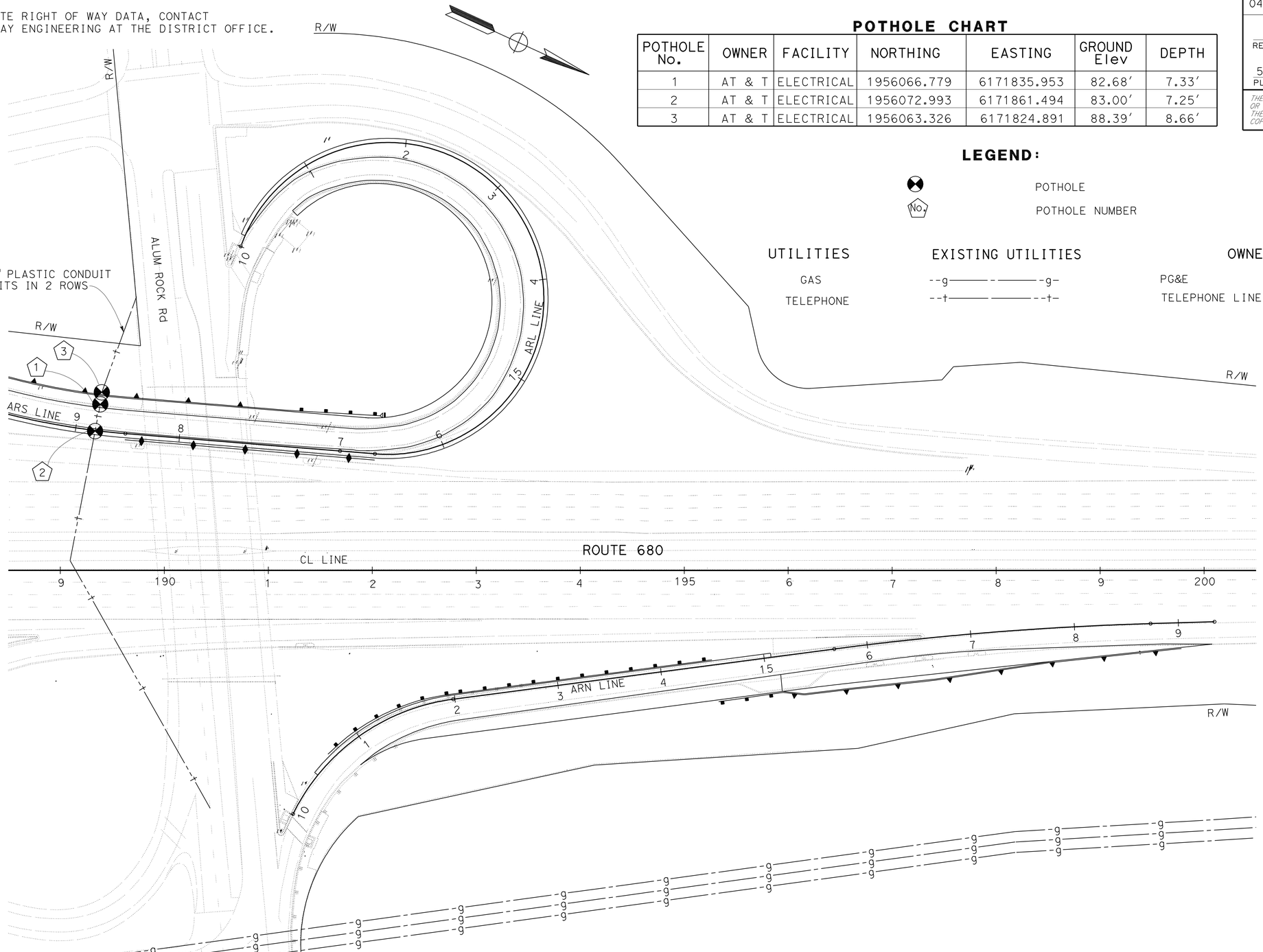

UTILITY PLAN

SCALE: 1" = 50′

U-1

APPROVED FOR UTILITY INFORMATION ONLY

STATE OF CALIFORNIA - DEPARTMENT OF TRANSPORTATION

Caltrans® DESIGN

FUNCTIONAL SUPERVISOR: HASSAN NIKZAD

CALCULATED-DESIGNED BY: QUYHN P. NGUYEN

CHECKED BY: ROSTAM POUROUSHASB

REVISED BY

DATE REVISED

LAST REVISION 12-09-11

DATE PLOTTED => 15-MAY-2012

TIME PLOTTED => 11:07

Dist	COUNTY	ROUTE	POST MILES TOTAL PROJECT	SHEET No.	TOTAL SHEETS
04	Ala,SCl	680	0.0/0.1, 0.1/9.9	86	319

REGISTERED CIVIL ENGINEER 2-13-12 DATE

5-14-12
PLANS APPROVAL DATE

REGISTERED PROFESSIONAL ENGINEER Jerilyn L. Struven No. 49964 Exp. 12-31-12 CIVIL STATE OF CALIFORNIA

THE STATE OF CALIFORNIA OR ITS OFFICERS OR AGENTS SHALL NOT BE RESPONSIBLE FOR THE ACCURACY OR COMPLETENESS OF SCANNED COPIES OF THIS PLAN SHEET.

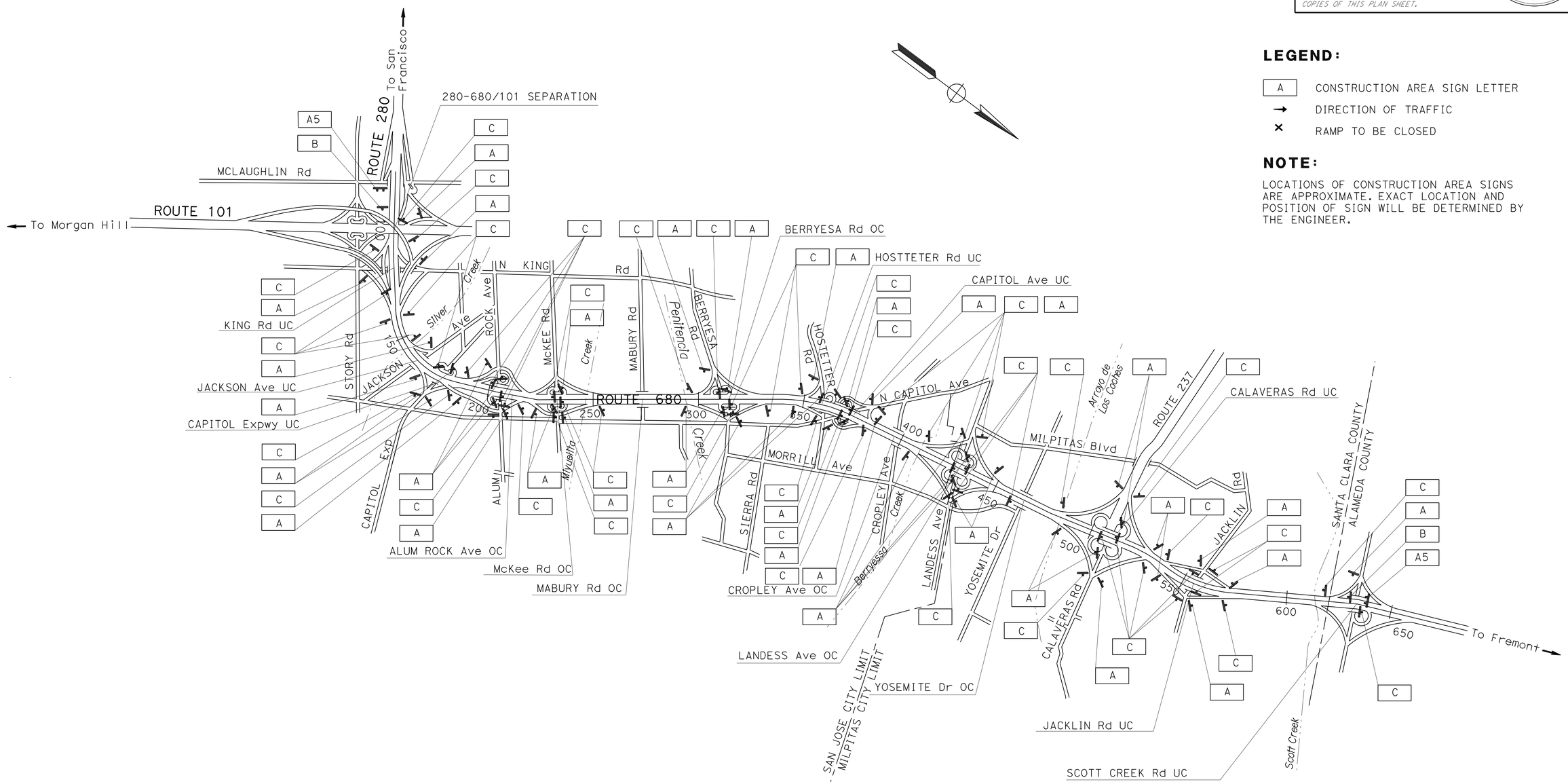

LEGEND:

A	CONSTRUCTION AREA SIGN LETTER
→	DIRECTION OF TRAFFIC
×	RAMP TO BE CLOSED

NOTE:

LOCATIONS OF CONSTRUCTION AREA SIGNS ARE APPROXIMATE. EXACT LOCATION AND POSITION OF SIGN WILL BE DETERMINED BY THE ENGINEER.

CONSTRUCTION AREA SIGNS

NO SCALE

CS-1

APPROVED FOR CONSTRUCTION AREA SIGN WORK ONLY

STATE OF CALIFORNIA - DEPARTMENT OF TRANSPORTATION

Caltrans

TRAFFIC

FUNCTIONAL SUPERVISOR: ROLAND AU-YEUNG

CALCULATED-DESIGNED BY: HENRY TAM

CHECKED BY: JERILYN STRUVEN

REVISED BY

DATE REVISED

LAST REVISION 01-24-12 | DATE PLOTTED => 14-MAY-2012 | TIME PLOTTED => 09:45

Dist	COUNTY	ROUTE	POST MILES TOTAL PROJECT	SHEET No.	TOTAL SHEETS
04	Ala,SCl	680	0.0/0.1, 0.1/9.9	87	319

REGISTERED CIVIL ENGINEER 2-13-12 DATE

5-14-12
PLANS APPROVAL DATE

REGISTERED PROFESSIONAL ENGINEER Jerilyn L. Struven No. 49964 Exp. 12-31-12 CIVIL STATE OF CALIFORNIA

THE STATE OF CALIFORNIA OR ITS OFFICERS OR AGENTS SHALL NOT BE RESPONSIBLE FOR THE ACCURACY OR COMPLETENESS OF SCANNED COPIES OF THIS PLAN SHEET.

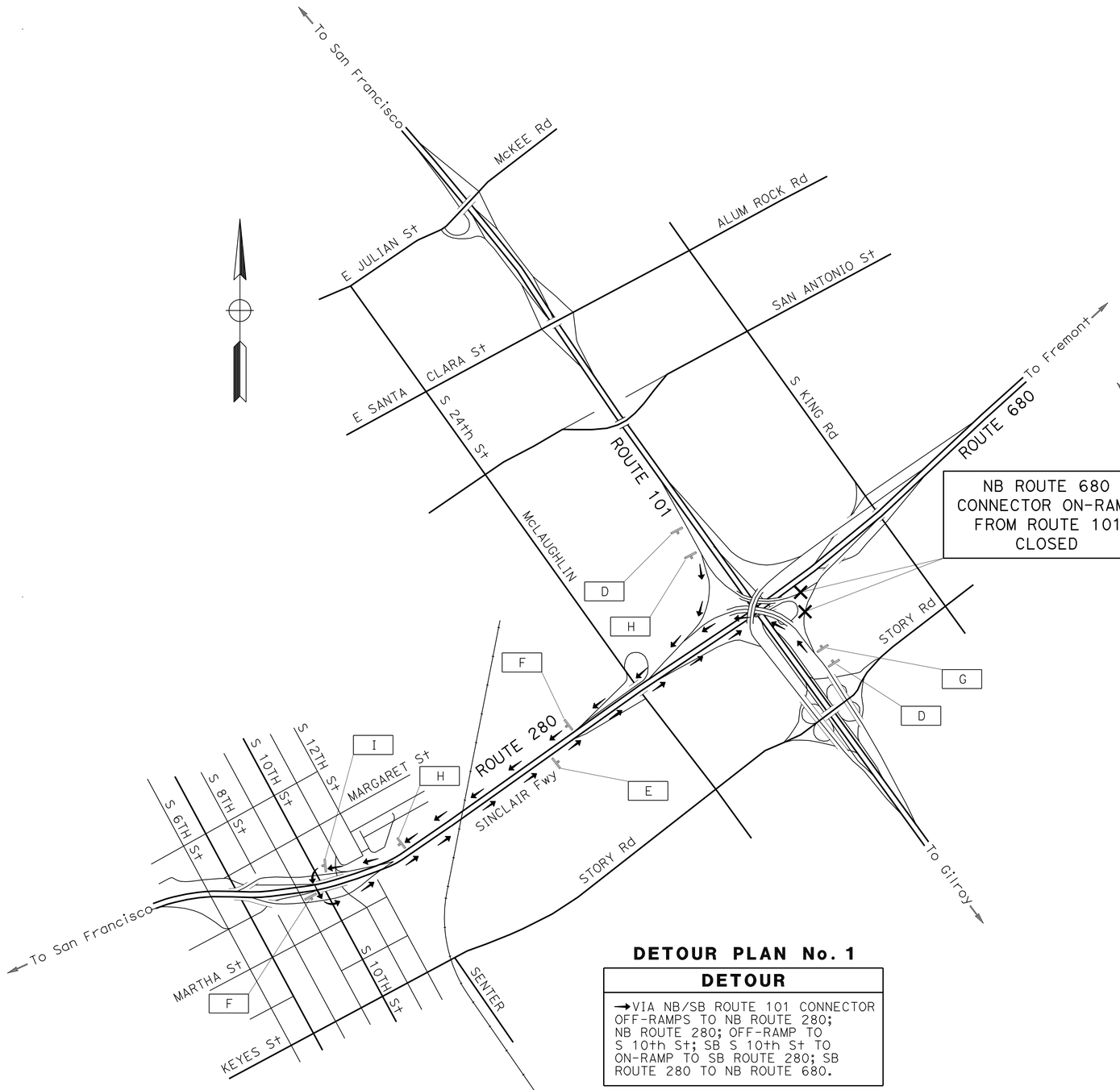

DETOUR PLAN No. 1

DETOUR
→VIA NB/SB ROUTE 101 CONNECTOR OFF-RAMPS TO NB ROUTE 280; NB ROUTE 280; OFF-RAMP TO S 10th St; SB S 10th St TO ON-RAMP TO SB ROUTE 280; SB ROUTE 280 TO NB ROUTE 680.

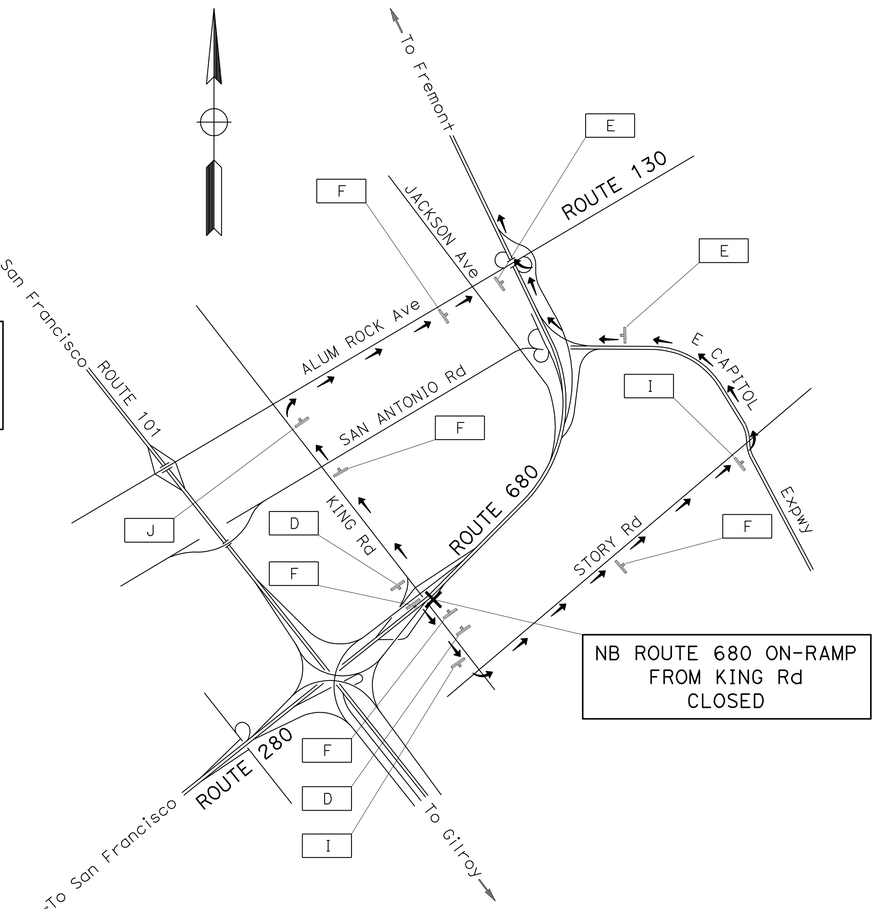

DETOUR PLAN No. 2

DETOUR
→VIA SB KING Rd; EB STORY Rd; NB CAPITOL Expwy TO ON-RAMP TO NB ROUTE 680. → NB KING Rd; EB ROUTE 130 TO CONNECTOR ON-RAMP TO ROUTE 680.

CONSTRUCTION AREA SIGNS AND DETOUR PLAN

NO SCALE

APPROVED FOR DETOUR CONSTRUCTION WORK ONLY

FOR NOTES AND LEGEND, SEE SHEET CS-1

CS-2

STATE OF CALIFORNIA - DEPARTMENT OF TRANSPORTATION
Caltrans®
TRAFFIC

FUNCTIONAL SUPERVISOR: ROLAND AU-YEUNG
CALCULATED-DESIGNED BY: HENRY TAM
CHECKED BY: JERILYN STRUVEN
REVISED BY
DATE REVISED

LAST REVISION 00-00-00
DATE PLOTTED => 14-MAY-2012
TIME PLOTTED => 09:45

Dist	COUNTY	ROUTE	POST MILES TOTAL PROJECT	SHEET No.	TOTAL SHEETS
04	Ala,SCl	680	0.0/0.1, 0.1/9.9	88	319

REGISTERED CIVIL ENGINEER 2-13-12 DATE

5-14-12
PLANS APPROVAL DATE

REGISTERED PROFESSIONAL ENGINEER Jerilyn L. Struven No. 49964 Exp. 12-31-12 CIVIL STATE OF CALIFORNIA

THE STATE OF CALIFORNIA OR ITS OFFICERS OR AGENTS SHALL NOT BE RESPONSIBLE FOR THE ACCURACY OR COMPLETENESS OF SCANNED COPIES OF THIS PLAN SHEET.

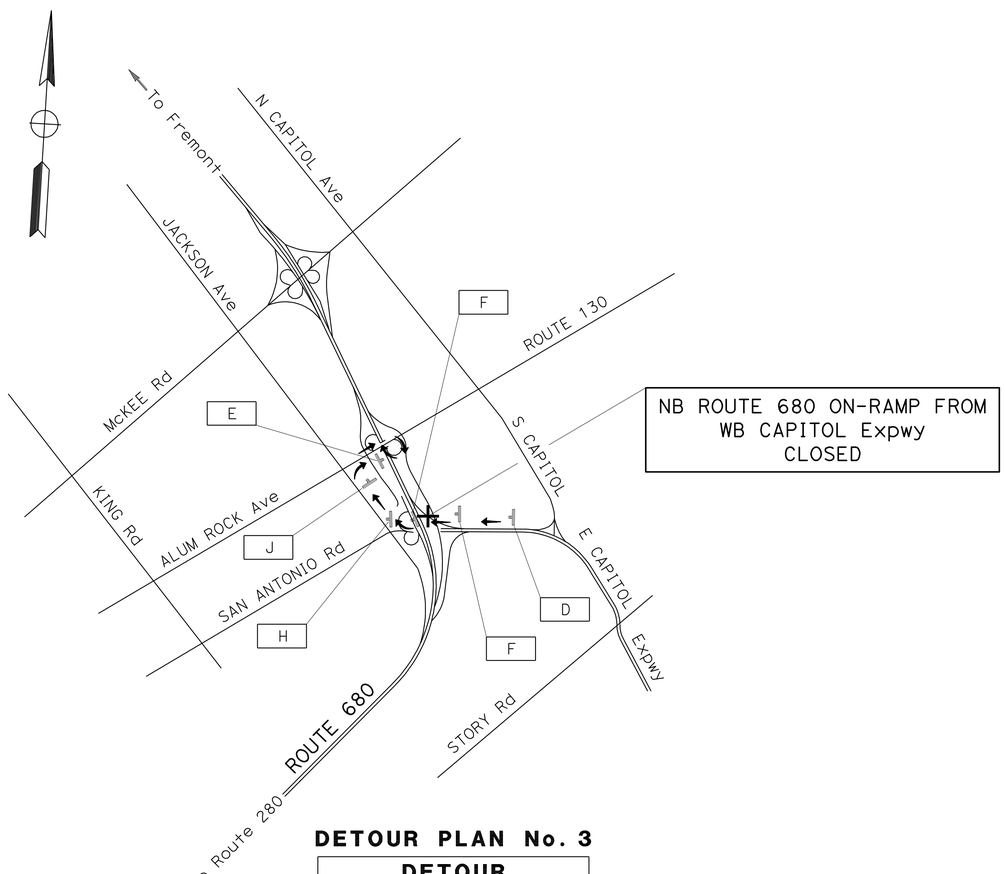

DETOUR PLAN No. 3

DETOUR
→ VIA NB CAPITOL Expwy, NB S JACKSON Ave EB ROUTE 130 TO NB LOOP ON-RAMP TO NB ROUTE 680

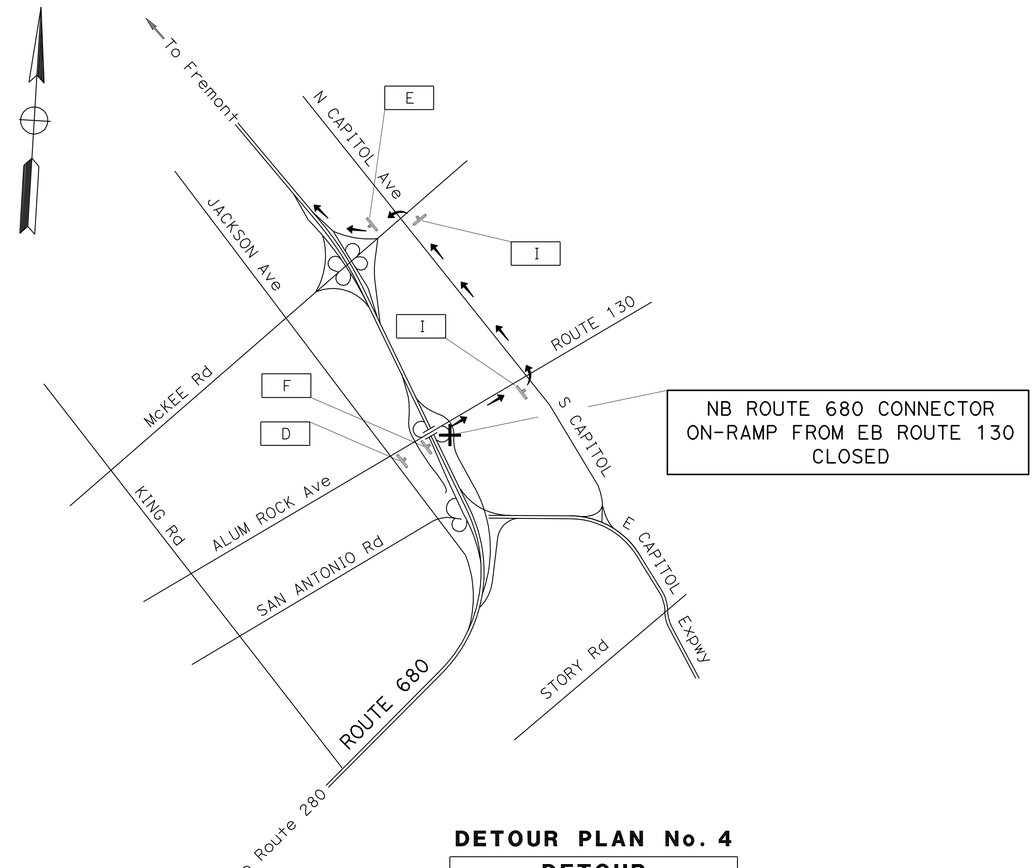

DETOUR PLAN No. 4

DETOUR
→ VIA EB ALUM ROCK Rd; NB CAPITOL Ave; WB McKEE Rd; ON-RAMP TO NB ROUTE 680

CONSTRUCTION AREA SIGNS AND DETOUR PLAN

NO SCALE

CS-3

APPROVED FOR DETOUR CONSTRUCTION WORK ONLY

FOR NOTES AND LEGEND, SEE SHEET CS-1

STATE OF CALIFORNIA - DEPARTMENT OF TRANSPORTATION
Caltrans
TRAFFIC

FUNCTIONAL SUPERVISOR: ROLAND AU-YEUNG

CALCULATED-DESIGNED BY: HENRY TAM
CHECKED BY: JERILYN STRUVEN

REVISED BY
DATE REVISED

LAST REVISION 01-25-12
DATE PLOTTED => 14-MAY-2012
TIME PLOTTED => 09:45

Dist	COUNTY	ROUTE	POST MILES TOTAL PROJECT	SHEET No.	TOTAL SHEETS
04	Ala,SCl	680	0.0/0.1, 0.1/9.9	89	319

REGISTERED CIVIL ENGINEER 2-13-12 DATE

5-14-12
PLANS APPROVAL DATE

REGISTERED PROFESSIONAL ENGINEER Jerilyn L. Struven No. 49964 Exp. 12-31-12 CIVIL STATE OF CALIFORNIA

THE STATE OF CALIFORNIA OR ITS OFFICERS OR AGENTS SHALL NOT BE RESPONSIBLE FOR THE ACCURACY OR COMPLETENESS OF SCANNED COPIES OF THIS PLAN SHEET.

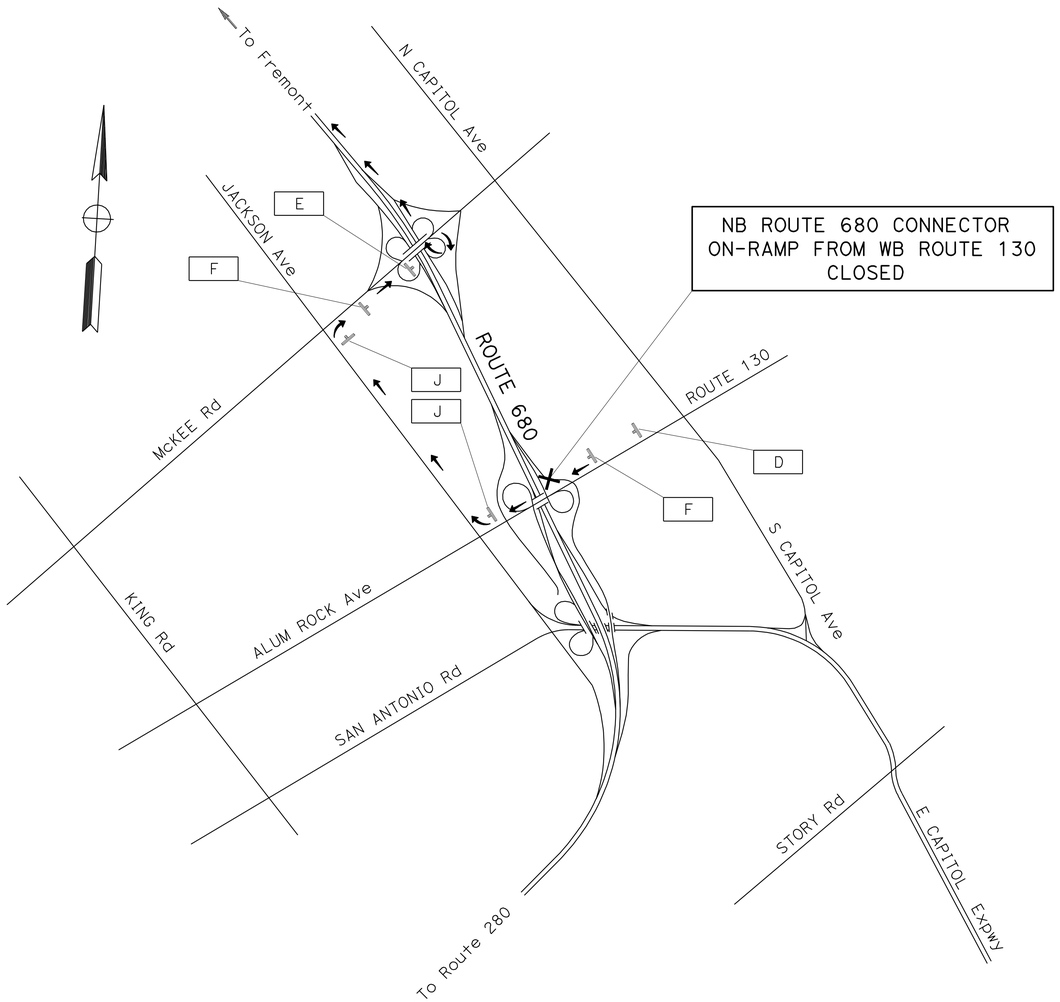

NB ROUTE 680 CONNECTOR ON-RAMP FROM WB ROUTE 130 CLOSED

DETOUR PLAN No. 5

DETOUR
→ VIA WB ALUM ROCK Ave; NB JACKSON Ave; EB McKEE Rd TO LOOP ON-RAMP TO ROUTE 680

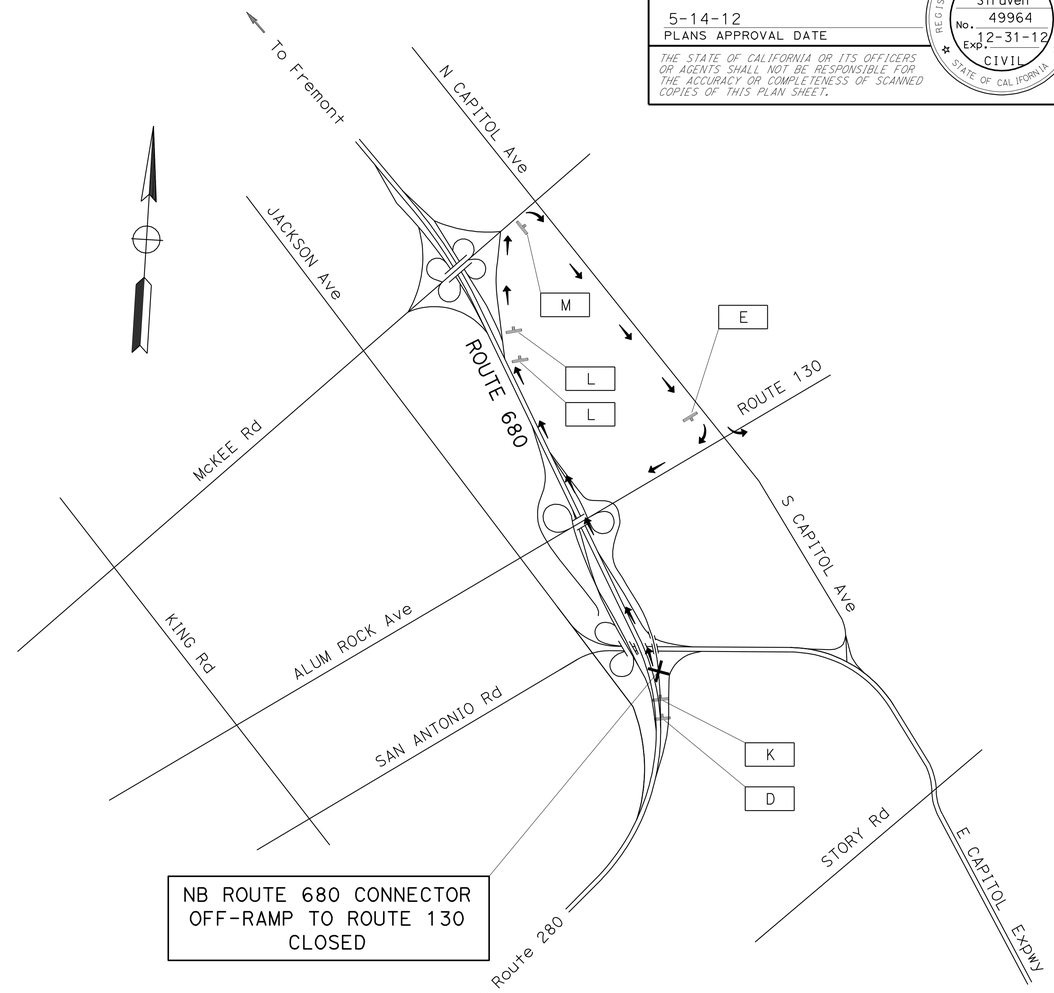

NB ROUTE 680 CONNECTOR OFF-RAMP TO ROUTE 130 CLOSED

DETOUR PLAN No. 6

DETOUR
→ VIA ROUTE 680; OFF-RAMP TO EB McKEE Rd; EB McKEE; SB N. CAPITOL Ave TO ALUM ROCK Ave/ROUTE 130

APPROVED FOR DETOUR CONSTRUCTION WORK ONLY

FOR NOTES AND LEGEND, SEE SHEET CS-1

CONSTRUCTION AREA SIGNS AND DETOUR PLAN

NO SCALE

CS-4

STATE OF CALIFORNIA - DEPARTMENT OF TRANSPORTATION
Caltrans
TRAFFIC

FUNCTIONAL SUPERVISOR: ROLAND AU-YEUNG
CALCULATED-DESIGNED BY: HENRY TAM
CHECKED BY: JERILYN STRUVEN
REVISED BY
DATE REVISED

LAST REVISION 10-26-11
DATE PLOTTED => 14-MAY-2012
TIME PLOTTED => 09:45

Dist	COUNTY	ROUTE	POST MILES TOTAL PROJECT	SHEET No.	TOTAL SHEETS
04	Ala,SCl	680	0.0/0.1, 0.1/9.9	90	319

REGISTERED CIVIL ENGINEER 2-13-12 DATE

5-14-12
PLANS APPROVAL DATE

REGISTERED PROFESSIONAL ENGINEER Jerilyn L. Struven No. 49964 Exp. 12-31-12 CIVIL STATE OF CALIFORNIA

THE STATE OF CALIFORNIA OR ITS OFFICERS OR AGENTS SHALL NOT BE RESPONSIBLE FOR THE ACCURACY OR COMPLETENESS OF SCANNED COPIES OF THIS PLAN SHEET.

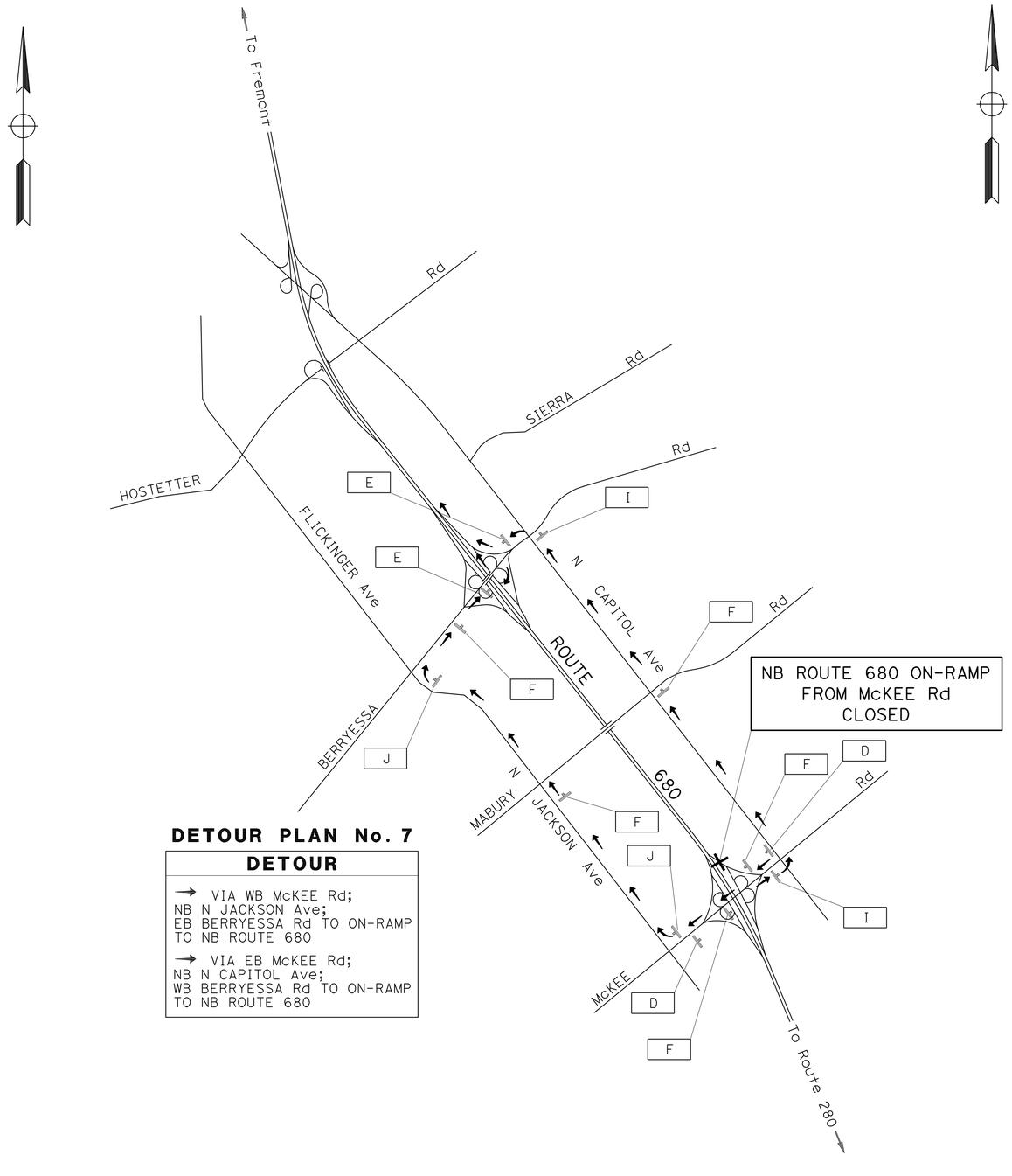

DETOUR PLAN No. 7

DETOUR

→ VIA WB McKEE Rd;
NB N JACKSON Ave;
EB BERRYESSA Rd TO ON-RAMP
TO NB ROUTE 680

→ VIA EB McKEE Rd;
NB N CAPITOL Ave;
WB BERRYESSA Rd TO ON-RAMP
TO NB ROUTE 680

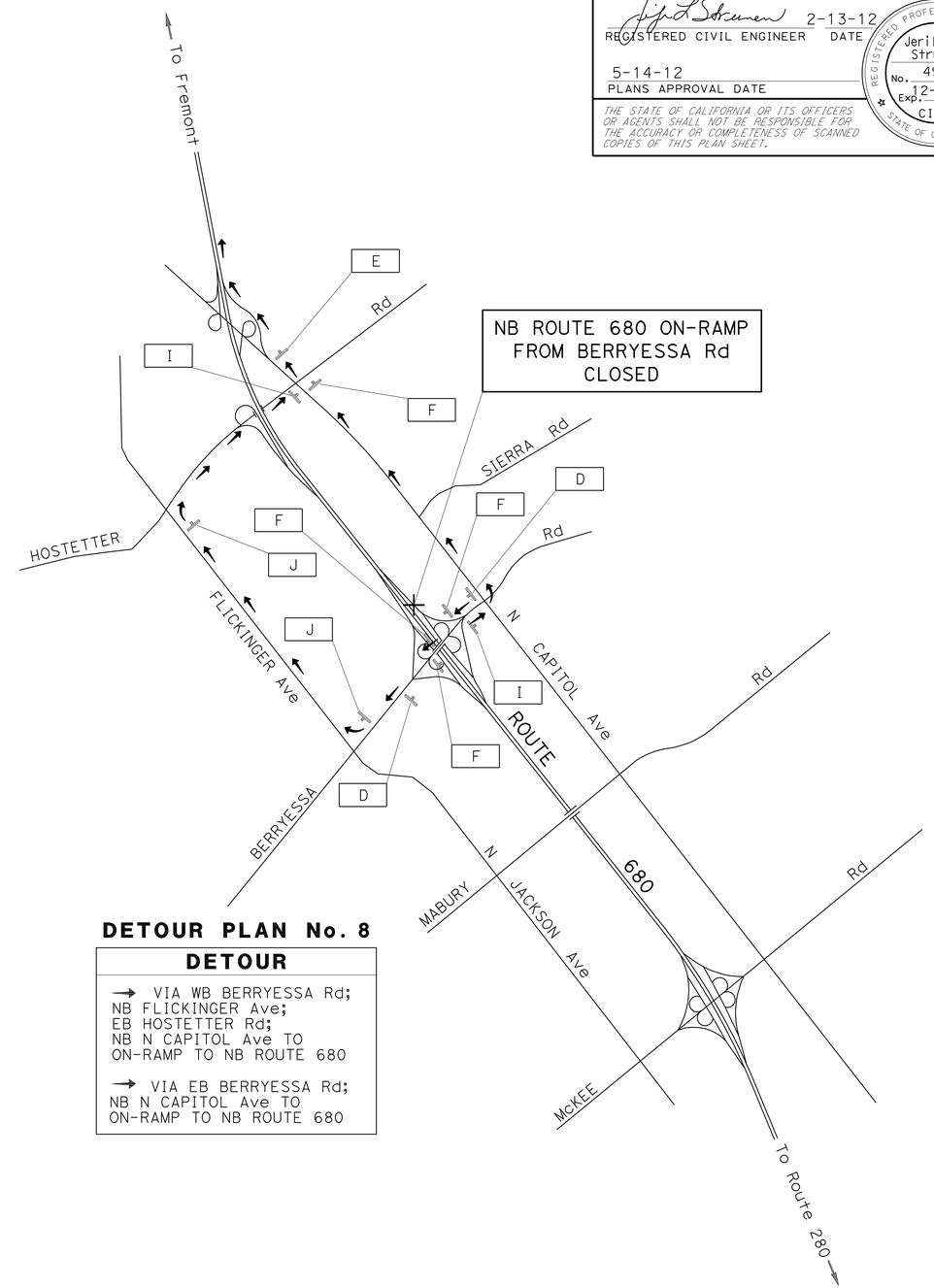

DETOUR PLAN No. 8

DETOUR

→ VIA WB BERRYESSA Rd;
NB FLICKINGER Ave;
EB HOSTETTER Rd;
NB N CAPITOL Ave TO
ON-RAMP TO NB ROUTE 680

→ VIA EB BERRYESSA Rd;
NB N CAPITOL Ave TO
ON-RAMP TO NB ROUTE 680

CONSTRUCTION AREA SIGNS AND DETOUR PLAN

NO SCALE

APPROVED FOR DETOUR CONSTRUCTION WORK ONLY

FOR NOTES AND LEGEND, SEE SHEET CS-1

CS-5

STATE OF CALIFORNIA - DEPARTMENT OF TRANSPORTATION
Caltrans
TRAFFIC

FUNCTIONAL SUPERVISOR: ROLAND AU-YEUNG
CALCULATED-DESIGNED BY: HENRY TAM
CHECKED BY: JERILYN STRUVEN
REVISED BY
DATE REVISED

LAST REVISION 12-16-11
DATE PLOTTED => 14-MAY-2012
TIME PLOTTED => 09:45

Dist	COUNTY	ROUTE	POST MILES TOTAL PROJECT	SHEET No.	TOTAL SHEETS
04	Ala,SCl	680	0.0/0.1, 0.1/9.9	91	319

REGISTERED CIVIL ENGINEER 2-13-12 DATE

5-14-12
PLANS APPROVAL DATE

REGISTERED PROFESSIONAL ENGINEER Jerilyn L. Struven No. 49964 Exp. 12-31-12 CIVIL STATE OF CALIFORNIA

THE STATE OF CALIFORNIA OR ITS OFFICERS OR AGENTS SHALL NOT BE RESPONSIBLE FOR THE ACCURACY OR COMPLETENESS OF SCANNED COPIES OF THIS PLAN SHEET.

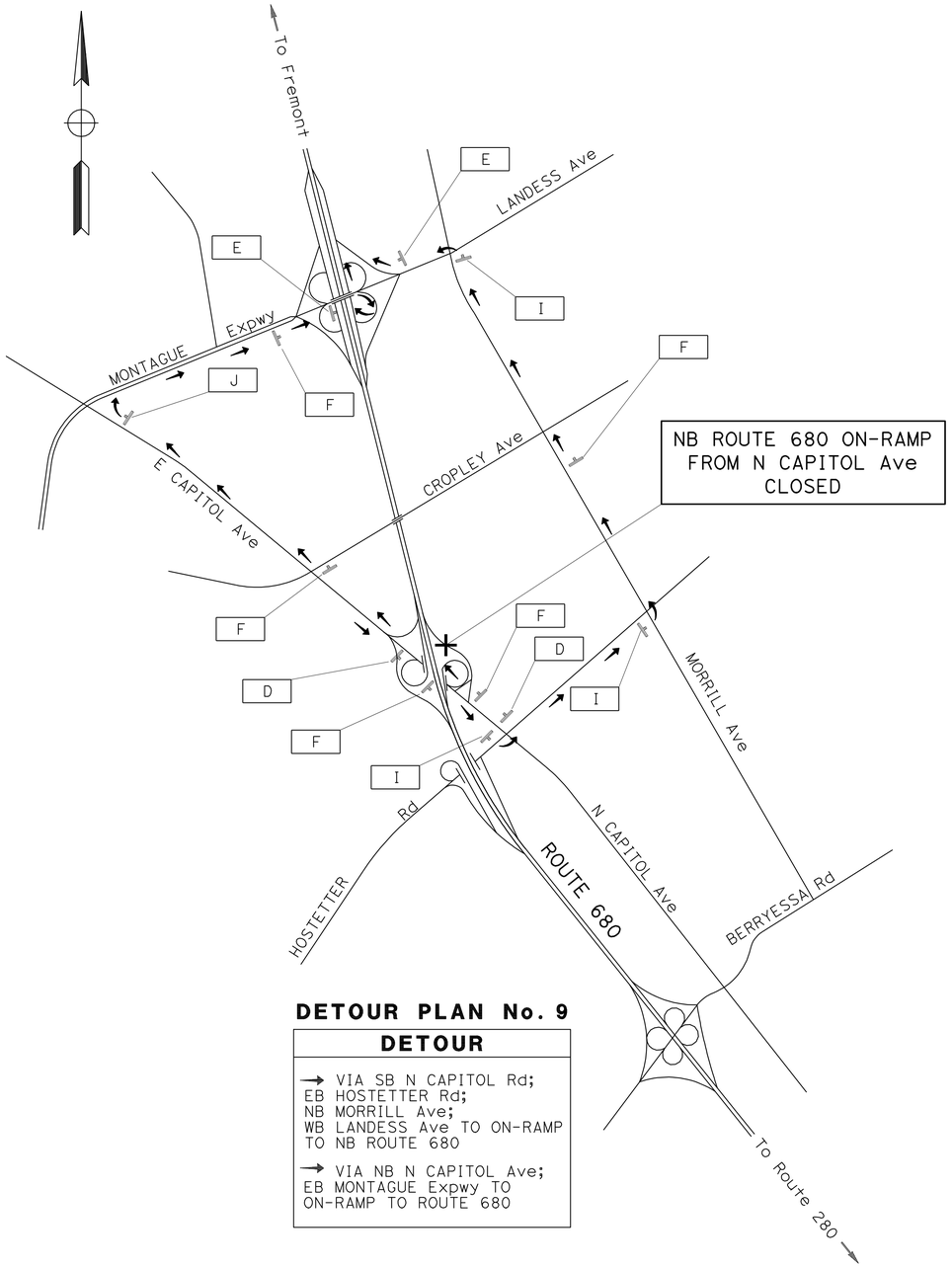

DETOUR PLAN No. 9

DETOUR

→ VIA SB N CAPITOL Rd; EB HOSTETTER Rd; NB MORRILL Ave; WB LANDESS Ave TO ON-RAMP TO NB ROUTE 680

→ VIA NB N CAPITOL Ave; EB MONTAGUE Expwy TO ON-RAMP TO ROUTE 680

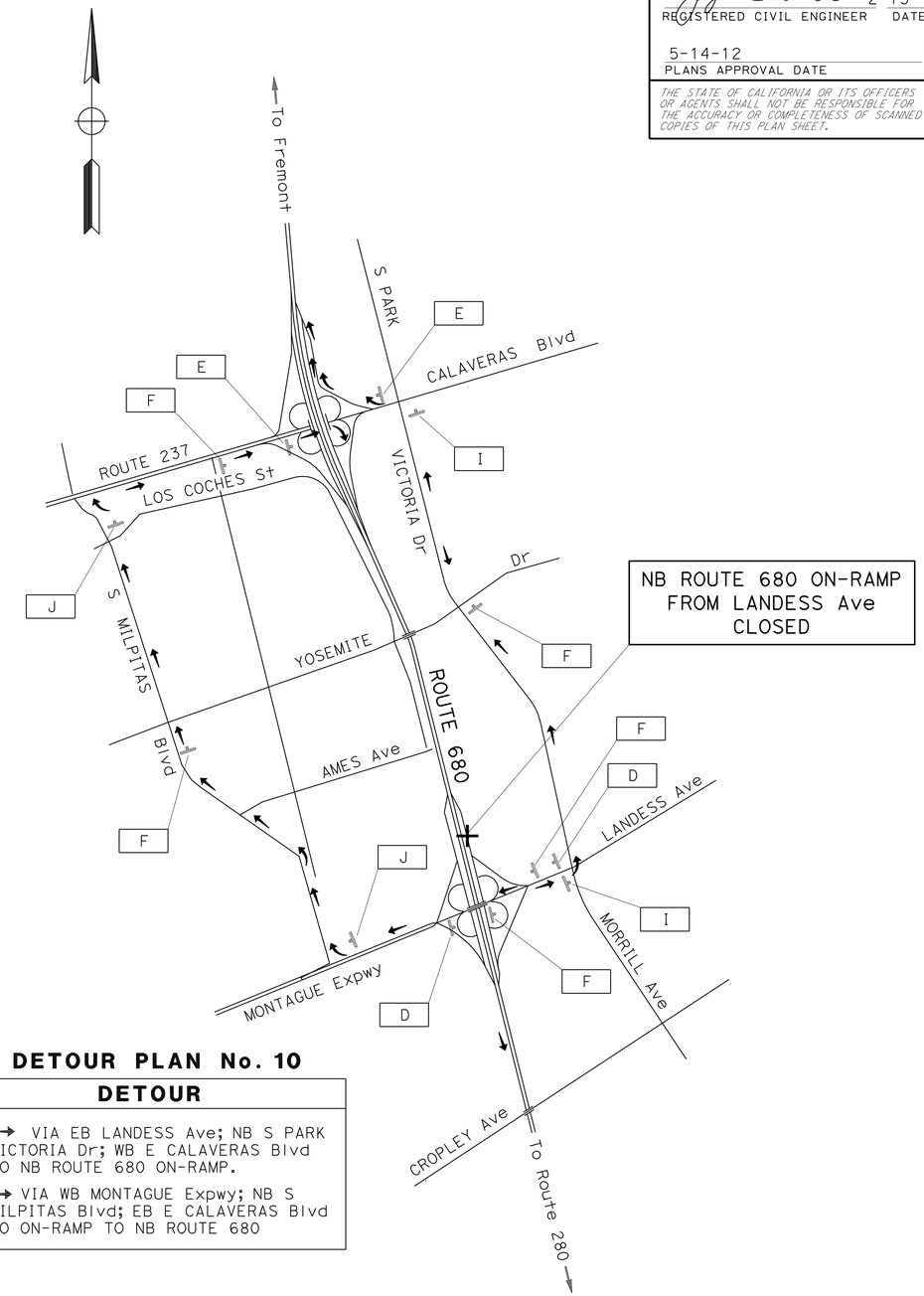

DETOUR PLAN No. 10

DETOUR

→ VIA EB LANDESS Ave; NB S PARK VICTORIA Dr; WB E CALAVERAS Blvd TO NB ROUTE 680 ON-RAMP.

→ VIA WB MONTAGUE Expwy; NB S MILPITAS Blvd; EB E CALAVERAS Blvd TO ON-RAMP TO NB ROUTE 680

CONSTRUCTION AREA SIGNS AND DETOUR PLAN

NO SCALE

CS-6

APPROVED FOR DETOUR CONSTRUCTION WORK ONLY

FOR NOTES AND LEGEND, SEE SHEET CS-1

STATE OF CALIFORNIA - DEPARTMENT OF TRANSPORTATION
Caltrans
TRAFFIC

FUNCTIONAL SUPERVISOR: ROLAND AU-YEUNG
CALCULATED-DESIGNED BY: HENRY TAM
CHECKED BY: JERILYN STRUVEN
REVISED BY
DATE REVISED

LAST REVISION 12-19-11
DATE PLOTTED => 14-MAY-2012
TIME PLOTTED => 09:45

Dist	COUNTY	ROUTE	POST MILES TOTAL PROJECT	SHEET No.	TOTAL SHEETS
04	Ala,SCl	680	0.0/0.1, 0.1/9.9	92	319

REGISTERED CIVIL ENGINEER 2-13-12 DATE

5-14-12
PLANS APPROVAL DATE

REGISTERED PROFESSIONAL ENGINEER Jerilyn L. Struven No. 49964 Exp. 12-31-12 CIVIL STATE OF CALIFORNIA

THE STATE OF CALIFORNIA OR ITS OFFICERS OR AGENTS SHALL NOT BE RESPONSIBLE FOR THE ACCURACY OR COMPLETENESS OF SCANNED COPIES OF THIS PLAN SHEET.

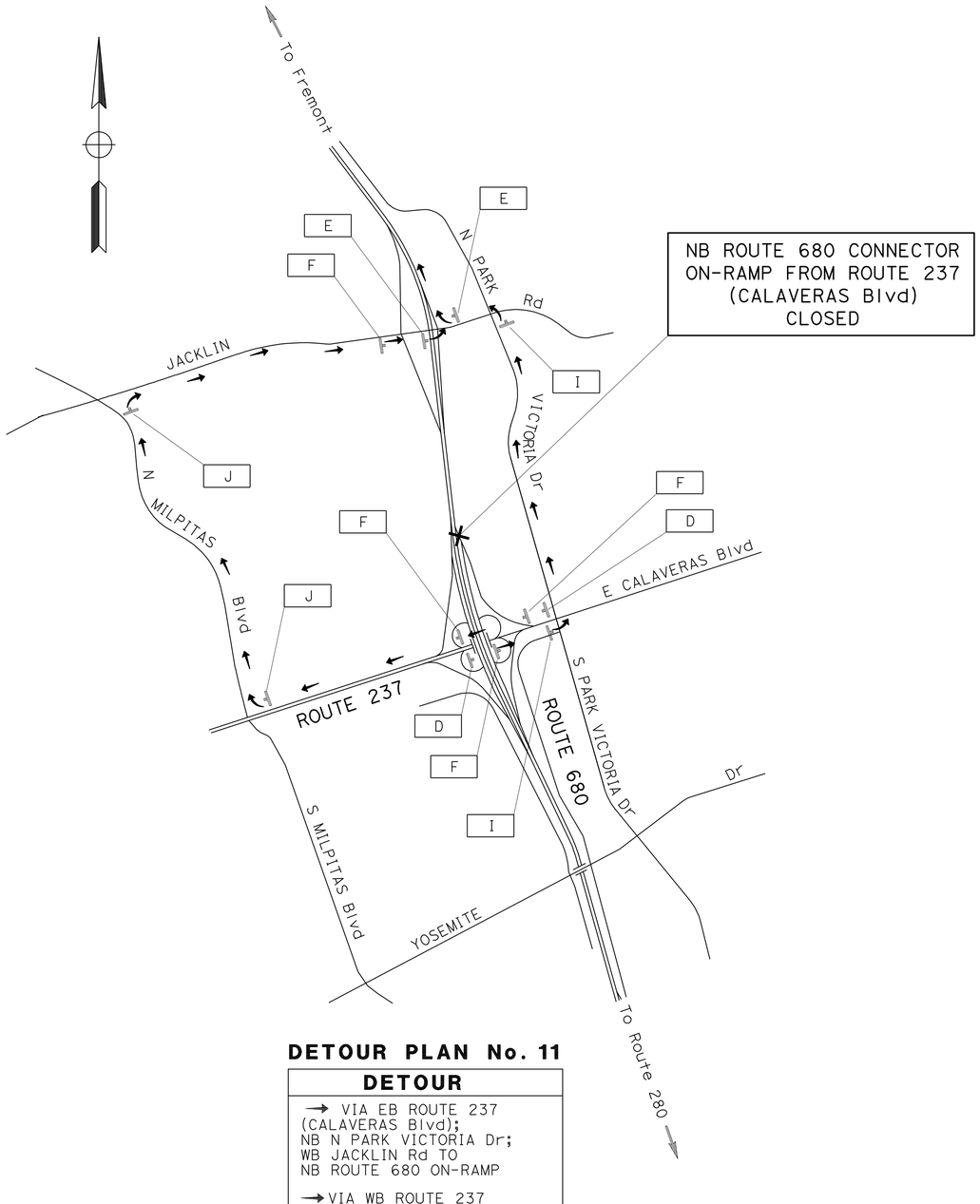

DETOUR PLAN No. 11

DETOUR

→ VIA EB ROUTE 237 (CALAVERAS Blvd);
NB N PARK VICTORIA Dr;
WB JACKLIN Rd TO
NB ROUTE 680 ON-RAMP

→ VIA WB ROUTE 237 (CALAVERAS Blvd);
NB N MILPITAS Blvd;
EB JACKLIN Rd TO ON-RAMP
TO NB ROUTE 680

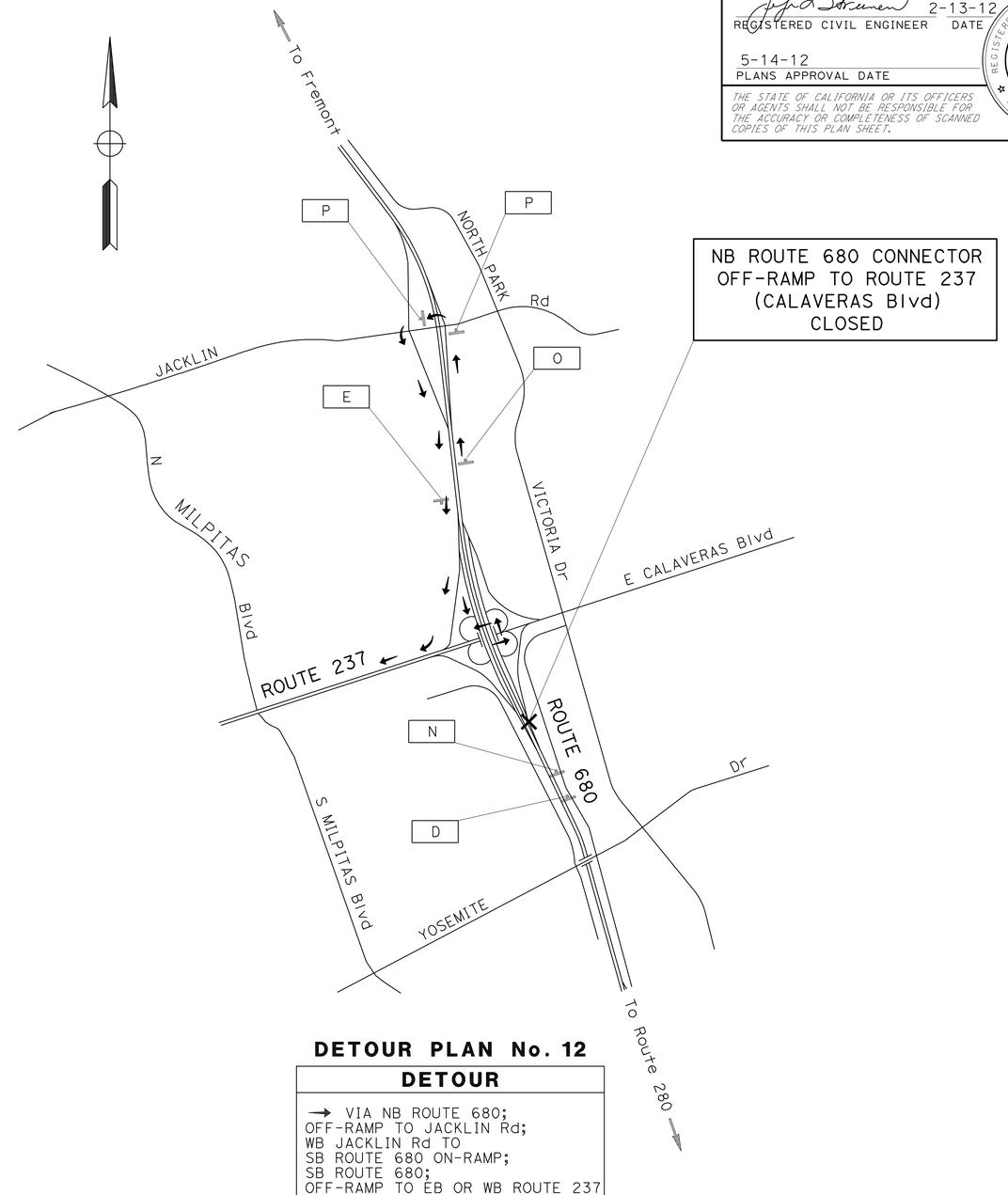

DETOUR PLAN No. 12

DETOUR

→ VIA NB ROUTE 680;
OFF-RAMP TO JACKLIN Rd;
WB JACKLIN Rd TO
SB ROUTE 680 ON-RAMP;
SB ROUTE 680;
OFF-RAMP TO EB OR WB ROUTE 237
(CALAVERAS Blvd)

CONSTRUCTION AREA SIGNS AND DETOUR PLAN

NO SCALE

APPROVED FOR DETOUR CONSTRUCTION WORK ONLY

FOR NOTES AND LEGEND, SEE SHEET CS-1

CS-7

STATE OF CALIFORNIA - DEPARTMENT OF TRANSPORTATION
Caltrans
TRAFFIC

FUNCTIONAL SUPERVISOR: ROLAND AU-YEUNG
CALCULATED-DESIGNED BY: HENRY TAM
CHECKED BY: JERILYN STRUVEN
REVISED BY
DATE REVISED

LAST REVISION 12-19-11
DATE PLOTTED => 14-MAY-2012
TIME PLOTTED => 09:45

Dist	COUNTY	ROUTE	POST MILES TOTAL PROJECT	SHEET No.	TOTAL SHEETS
04	Ala,SCl	680	0.0/0.1, 0.1/9.9	93	319

REGISTERED CIVIL ENGINEER 2-13-12 DATE

5-14-12
PLANS APPROVAL DATE

REGISTERED PROFESSIONAL ENGINEER Jerilyn L. Struven No. 49964 Exp. 12-31-12 CIVIL STATE OF CALIFORNIA

THE STATE OF CALIFORNIA OR ITS OFFICERS OR AGENTS SHALL NOT BE RESPONSIBLE FOR THE ACCURACY OR COMPLETENESS OF SCANNED COPIES OF THIS PLAN SHEET.

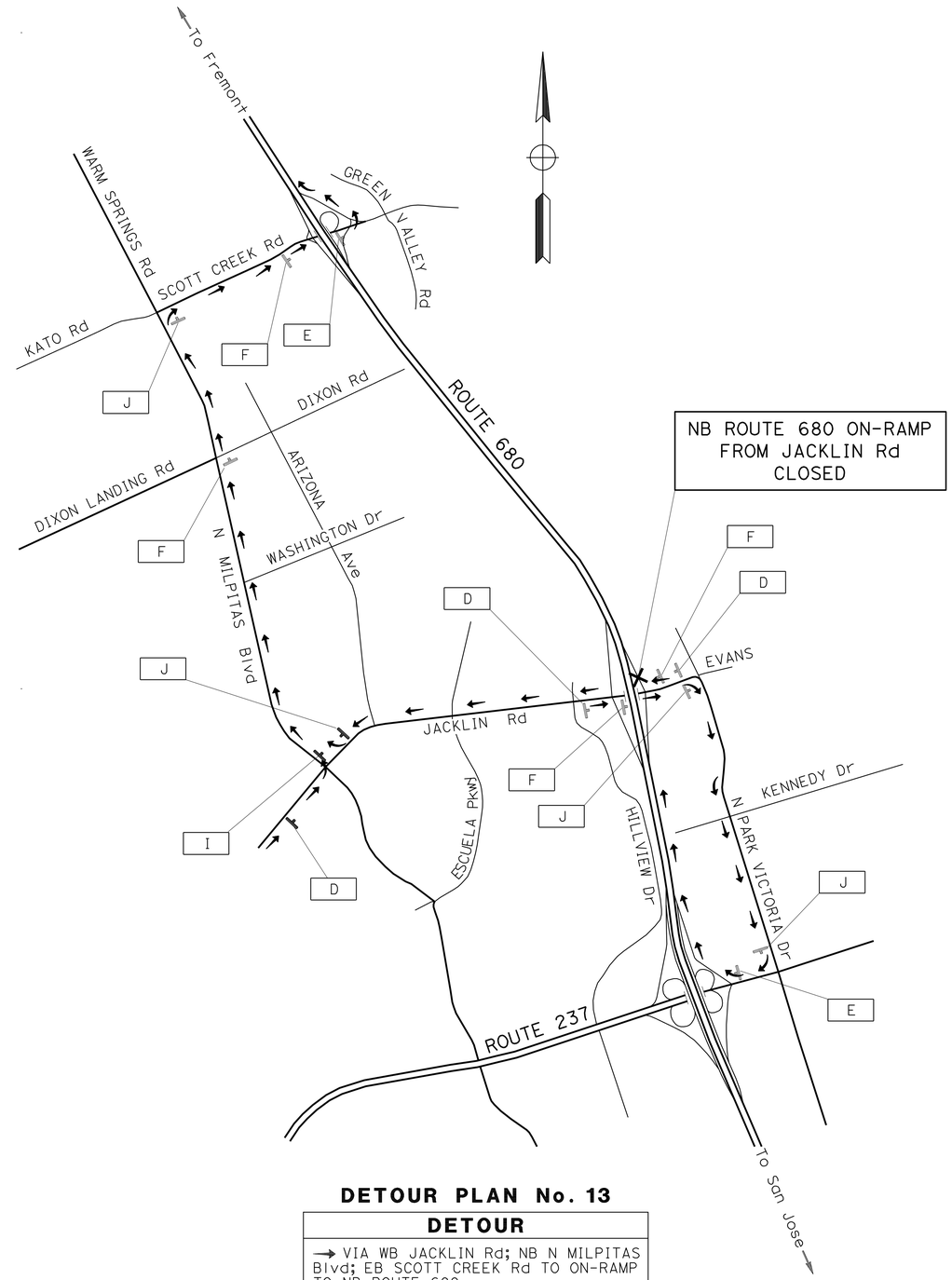

DETOUR PLAN No. 13

DETOUR

→ VIA WB JACKLIN Rd; NB N MILPITAS Blvd; EB SCOTT CREEK Rd TO ON-RAMP TO NB ROUTE 680.

→ VIA EB JACKLIN Rd; SB N PARK VICTORIA Dr; WB CALAVERAS Blvd TO ON-RAMP TO NB ROUTE 680.

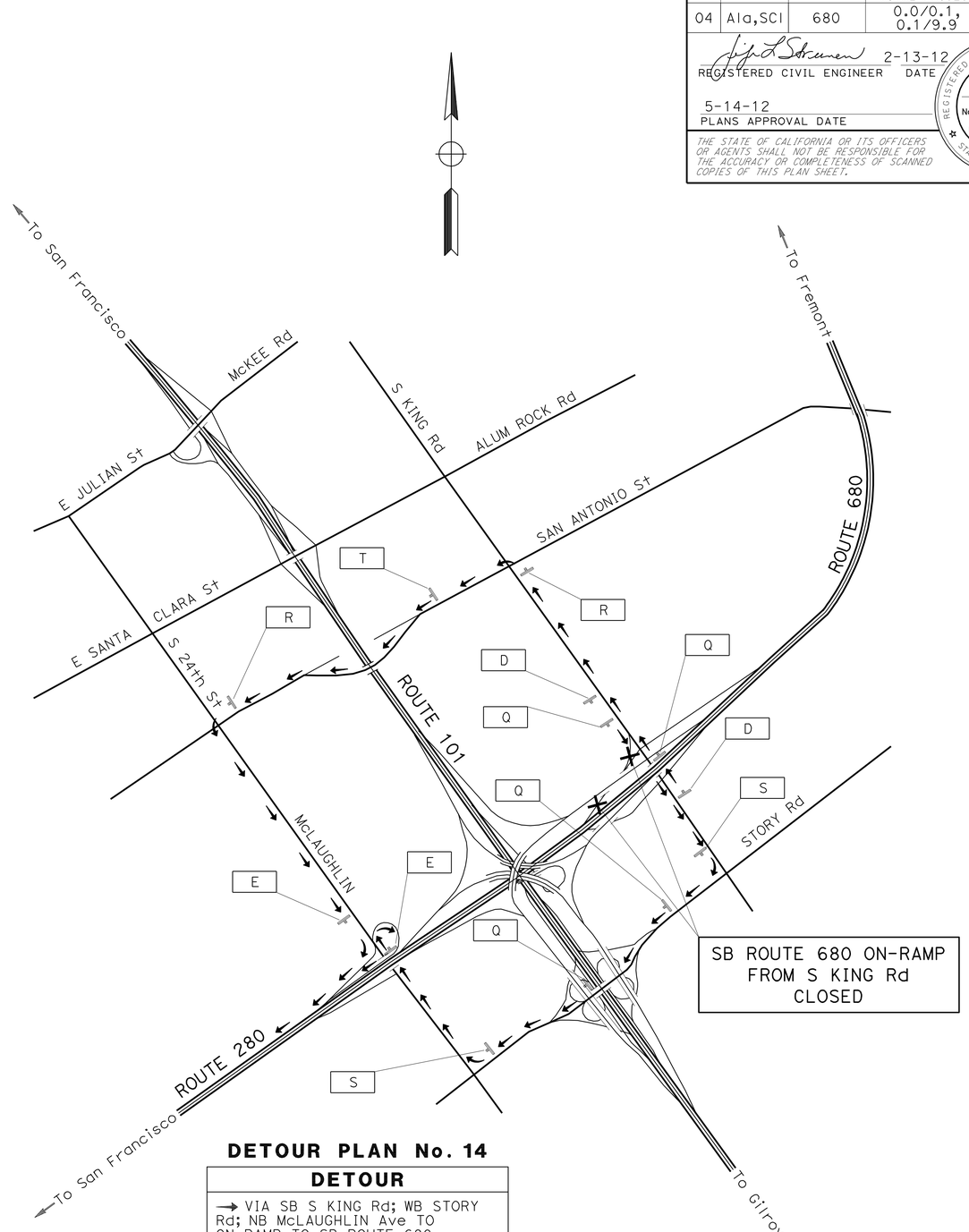

DETOUR PLAN No. 14

DETOUR

→ VIA SB S KING Rd; WB STORY Rd; NB McLAUGHLIN Ave TO ON-RAMP TO SB ROUTE 680.

→ VIA NB S KING Rd; WB E SAN ANTONIO St; SB McLAUGHLIN Ave TO ON-RAMP TO SB ROUTE 680.

CONSTRUCTION AREA SIGNS AND DETOUR PLAN

NO SCALE

CS-8

APPROVED FOR DETOUR CONSTRUCTION WORK ONLY

FOR NOTES AND LEGEND, SEE SHEET CS-1

STATE OF CALIFORNIA - DEPARTMENT OF TRANSPORTATION
Caltrans
TRAFFIC

FUNCTIONAL SUPERVISOR: ROLAND AU-YEUNG
CALCULATED-DESIGNED BY: HENRY TAM
CHECKED BY: JERILYN STRUVEN
REVISED BY
DATE REVISED

LAST REVISION 01-10-12
DATE PLOTTED => 14-MAY-2012
TIME PLOTTED => 09:45

Dist	COUNTY	ROUTE	POST MILES TOTAL PROJECT	SHEET No.	TOTAL SHEETS
04	Ala,SCl	680	0.0/0.1, 0.1/9.9	94	319

REGISTERED CIVIL ENGINEER 2-13-12 DATE

5-14-12
PLANS APPROVAL DATE

REGISTERED PROFESSIONAL ENGINEER Jerilyn L. Struven No. 49964 Exp. 12-31-12 CIVIL STATE OF CALIFORNIA

THE STATE OF CALIFORNIA OR ITS OFFICERS OR AGENTS SHALL NOT BE RESPONSIBLE FOR THE ACCURACY OR COMPLETENESS OF SCANNED COPIES OF THIS PLAN SHEET.

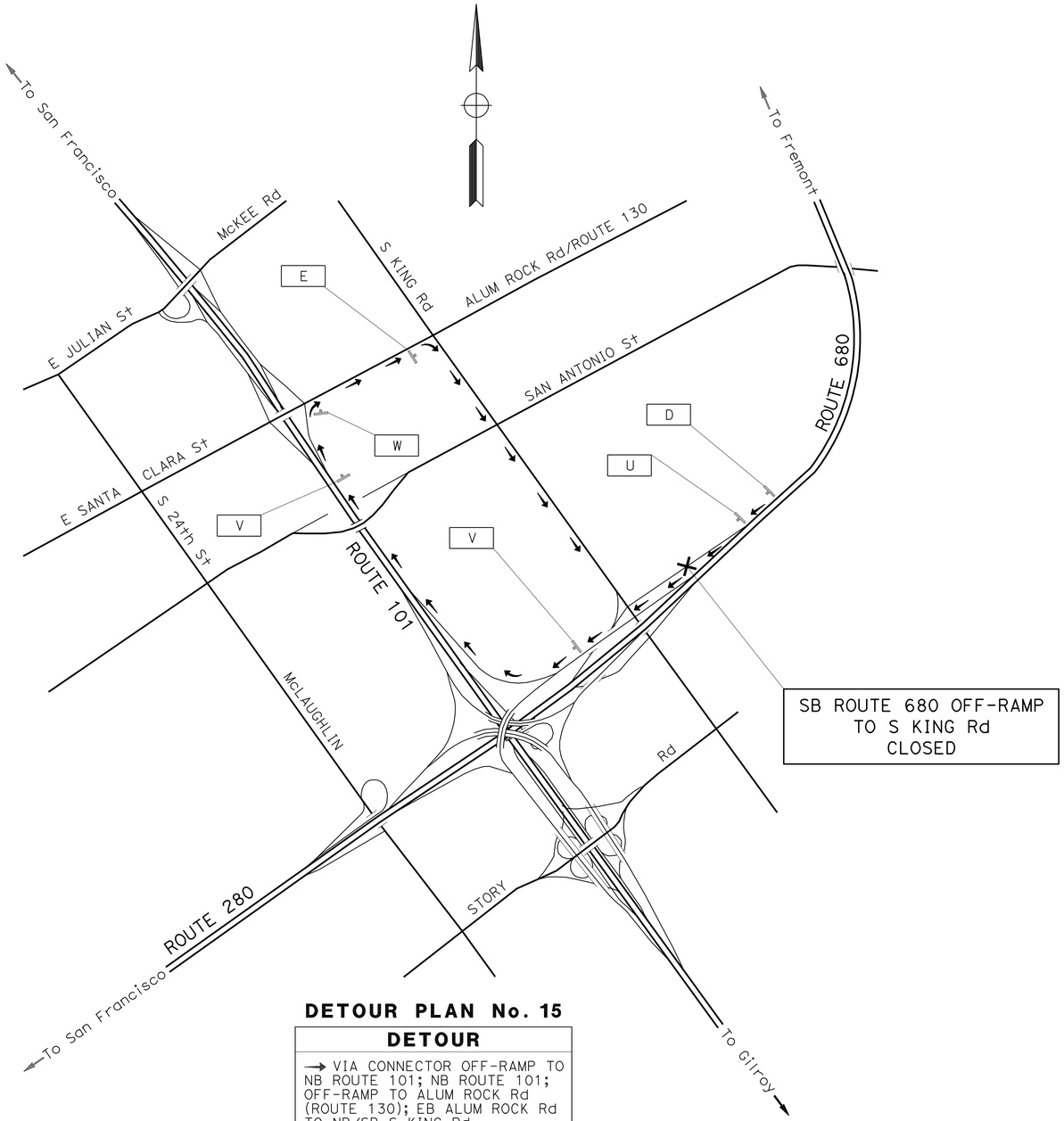

DETOUR PLAN No. 15

DETOUR
→ VIA CONNECTOR OFF-RAMP TO NB ROUTE 101; NB ROUTE 101; OFF-RAMP TO ALUM ROCK Rd (ROUTE 130); EB ALUM ROCK Rd TO NB/SB S KING Rd

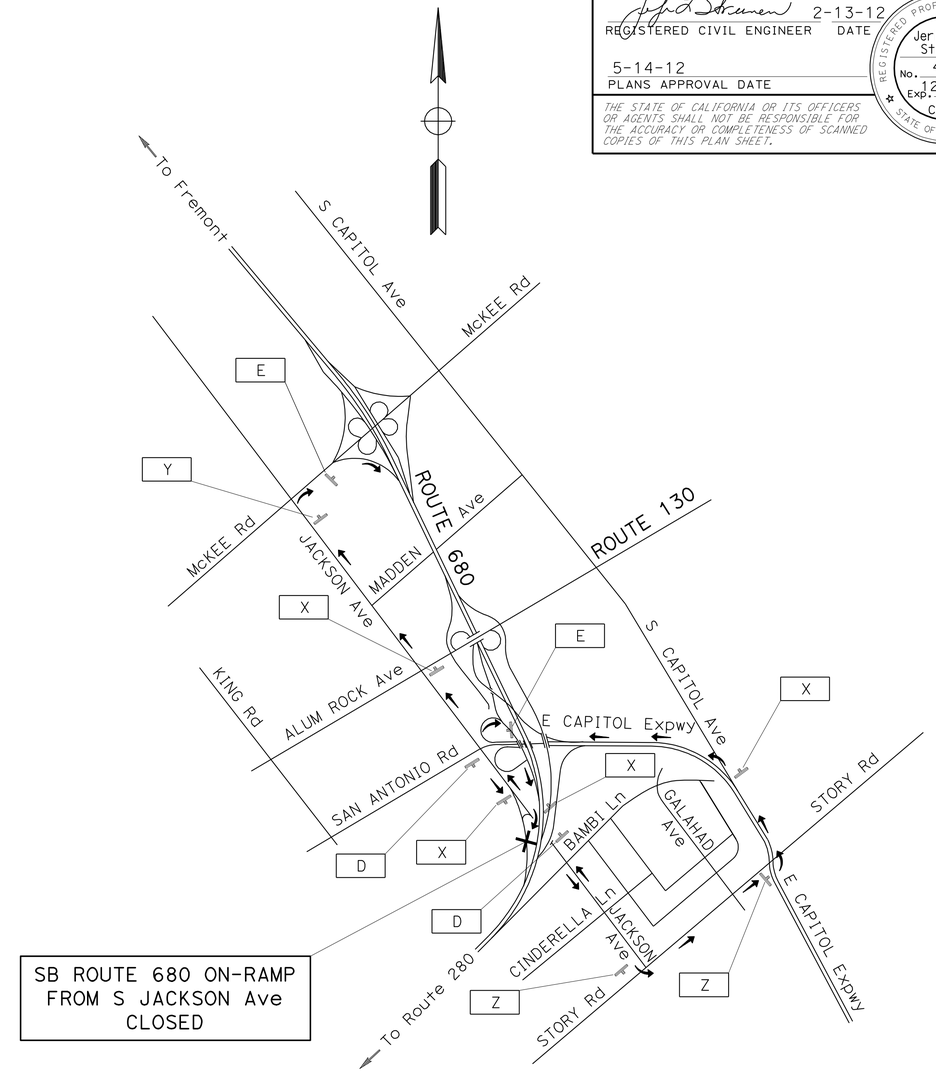

DETOUR PLAN No. 16

DETOUR
→ VIA EB JACKSON Ave; EB STORY Rd; WB CAPITOL Expwy; FROM WB CAPITOL Expwy LOOP ON-RAMP TO SB ROUTE 680 → VIA WB JACKSON Ave; EB McKEE Rd; FROM EB McKEE Rd ON-RAMP TO SB ROUTE 680

APPROVED FOR DETOUR CONSTRUCTION WORK ONLY

FOR NOTES AND LEGEND, SEE SHEET CS-1

CONSTRUCTION AREA SIGNS AND DETOUR PLAN

NO SCALE

CS-9

STATE OF CALIFORNIA - DEPARTMENT OF TRANSPORTATION
Caltrans
TRAFFIC

FUNCTIONAL SUPERVISOR: ROLAND AU-YEUNG
CALCULATED-DESIGNED BY: HENRY TAM
CHECKED BY: JERILYN STRUVEN
REVISED BY
DATE REVISED

LAST REVISION 01-25-12
DATE PLOTTED => 14-MAY-2012
TIME PLOTTED => 09:45

Dist	COUNTY	ROUTE	POST MILES TOTAL PROJECT	SHEET No.	TOTAL SHEETS
04	Ala,SCl	680	0.0/0.1, 0.1/9.9	95	319

REGISTERED CIVIL ENGINEER 2-13-12 DATE

5-14-12
PLANS APPROVAL DATE

REGISTERED PROFESSIONAL ENGINEER Jerilyn L. Struven No. 49964 Exp. 12-31-12 CIVIL STATE OF CALIFORNIA

THE STATE OF CALIFORNIA OR ITS OFFICERS OR AGENTS SHALL NOT BE RESPONSIBLE FOR THE ACCURACY OR COMPLETENESS OF SCANNED COPIES OF THIS PLAN SHEET.

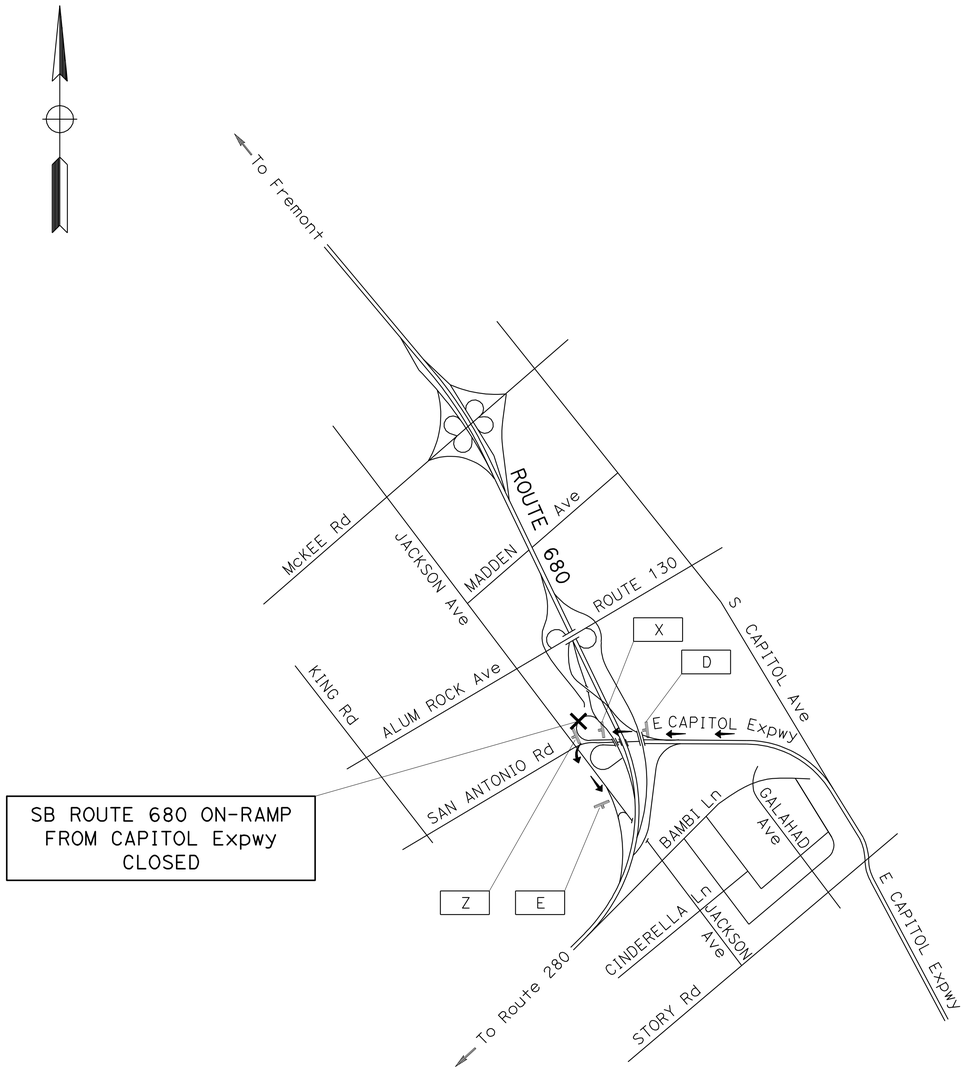

DETOUR PLAN No. 17

DETOUR
→ VIA WB E CAPITOL Expwy; SB JACKSON Ave TO ON-RAMP TO SB ROUTE 680

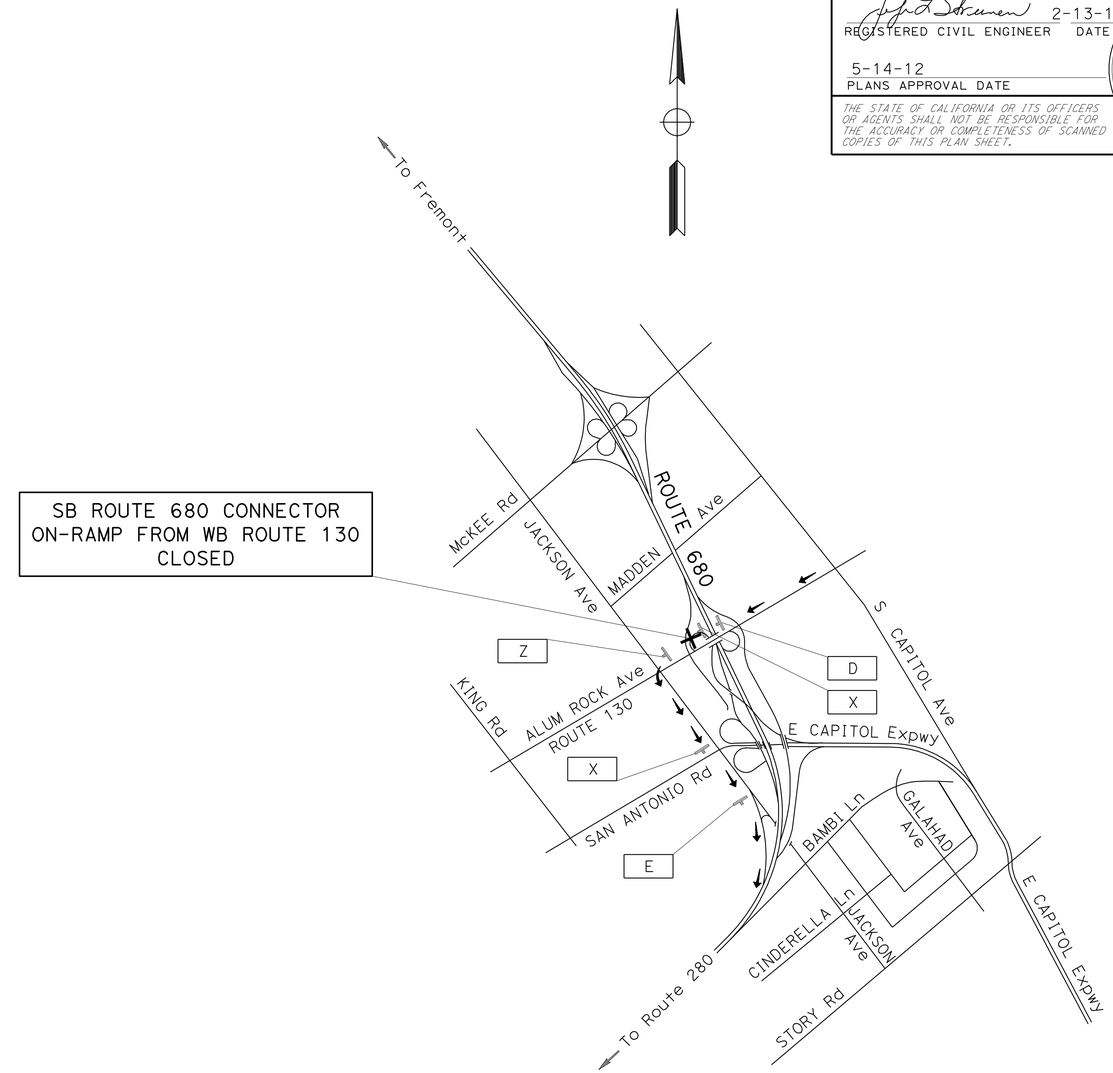

DETOUR PLAN No. 18

DETOUR
→ VIA WB ROUTE 130 (ALUM ROCK Ave); SB S JACKSON Ave TO ON-RAMP TO SB ROUTE 680

CONSTRUCTION AREA SIGNS AND DETOUR PLAN

NO SCALE

CS-10

APPROVED FOR DETOUR CONSTRUCTION WORK ONLY

FOR NOTES AND LEGEND, SEE SHEET CS-1

STATE OF CALIFORNIA - DEPARTMENT OF TRANSPORTATION
Caltrans
TRAFFIC

FUNCTIONAL SUPERVISOR: ROLAND AU-YEUNG
CALCULATED-DESIGNED BY: HENRY TAM
CHECKED BY: JERILYN STRUVEN
REVISED BY
DATE REVISED

LAST REVISION 01-25-12
DATE PLOTTED => 14-MAY-2012
TIME PLOTTED => 09:45

Dist	COUNTY	ROUTE	POST MILES TOTAL PROJECT	SHEET No.	TOTAL SHEETS
04	Ala,SCl	680	0.0/0.1, 0.1/9.9	96	319

REGISTERED CIVIL ENGINEER 2-13-12 DATE

5-14-12
PLANS APPROVAL DATE

REGISTERED PROFESSIONAL ENGINEER Jerilyn L. Struven No. 49964 Exp. 12-31-12 CIVIL STATE OF CALIFORNIA

THE STATE OF CALIFORNIA OR ITS OFFICERS OR AGENTS SHALL NOT BE RESPONSIBLE FOR THE ACCURACY OR COMPLETENESS OF SCANNED COPIES OF THIS PLAN SHEET.

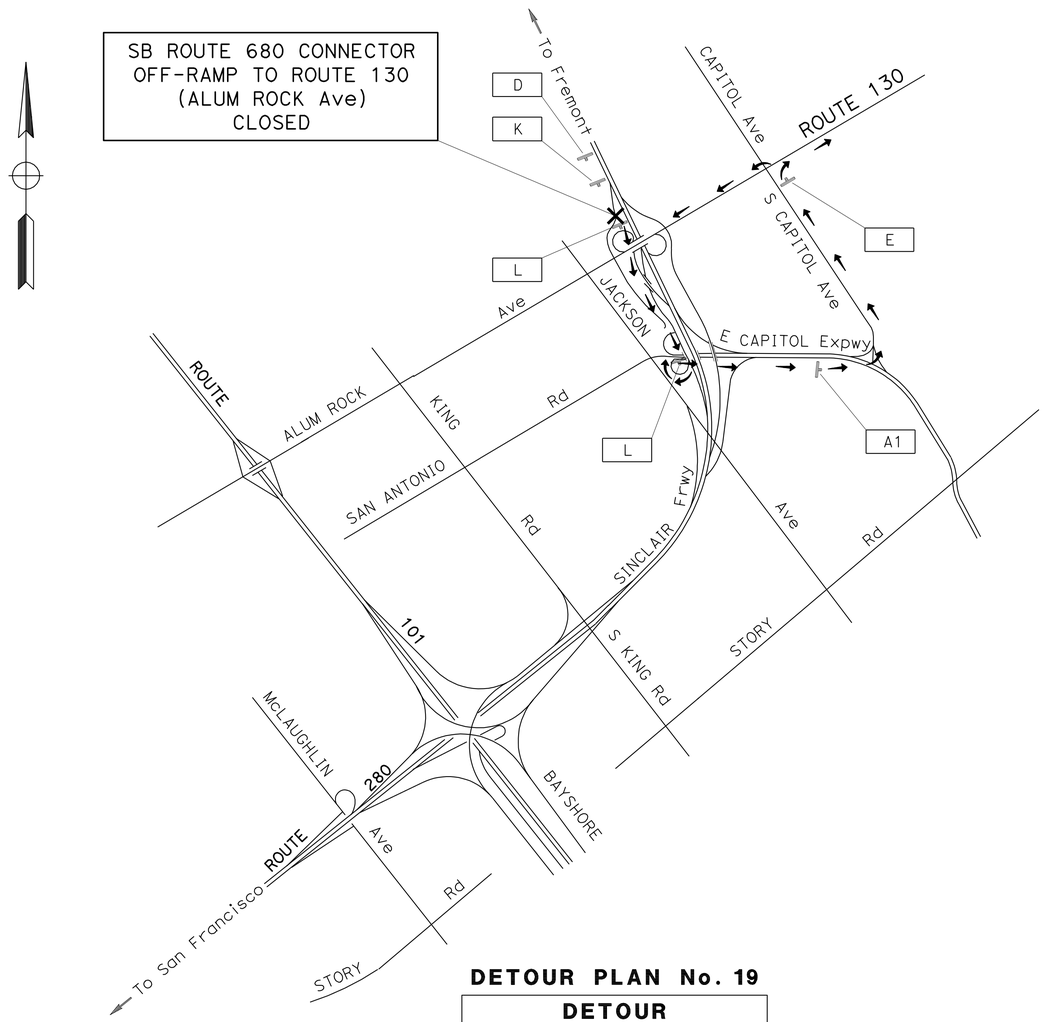

DETOUR PLAN No. 19

DETOUR
→ VIA SB Rte 680; OFF-RAMP TO SAN ANTONIO St/CAPITOL Expwy; LOOP OFF-RAMP TO EB CAPITOL Expwy; EB CAPITOL Expwy; NB S CAPITOL Ave TO EB/WB ROUTE 130 (ALUM ROCK Ave)

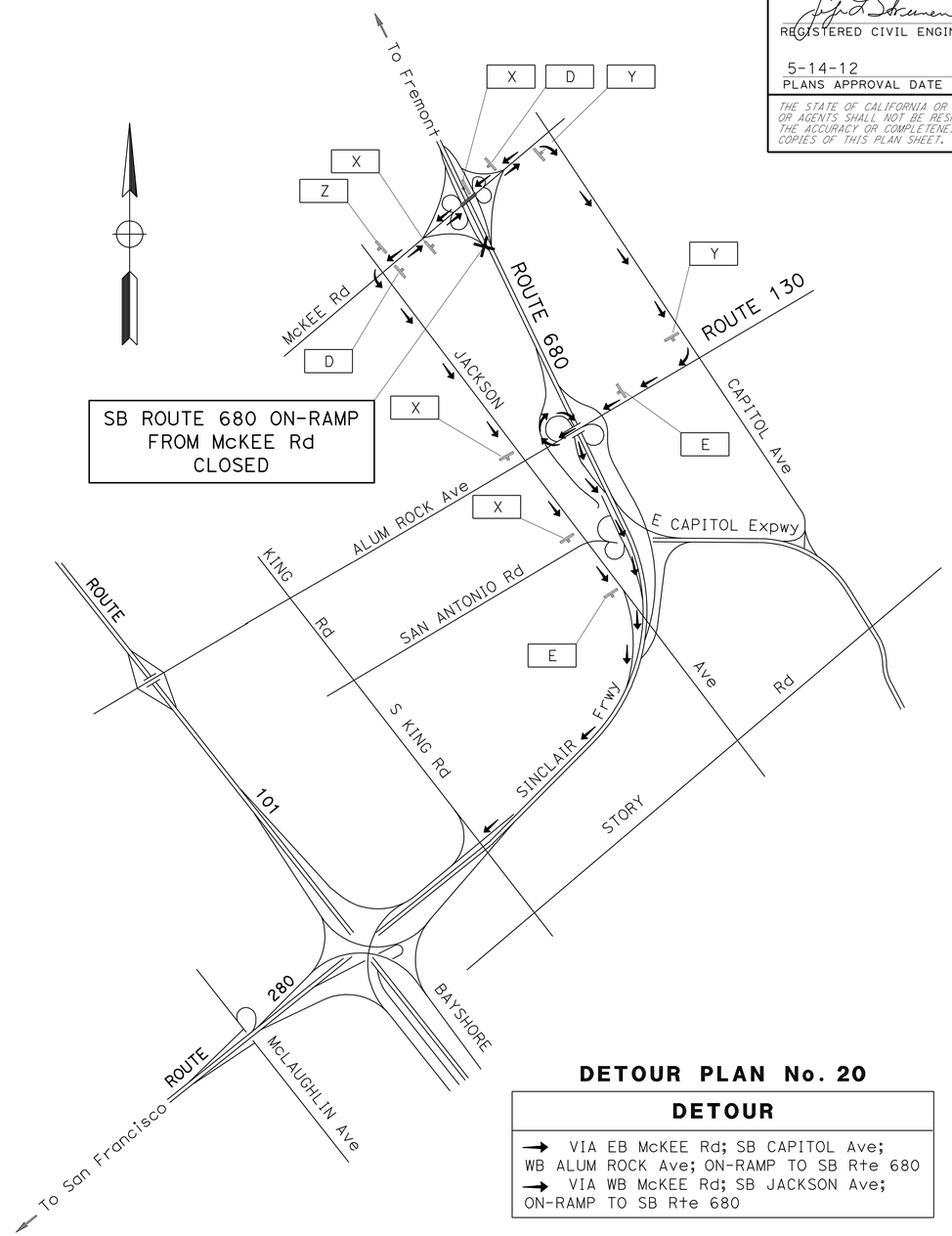

DETOUR PLAN No. 20

DETOUR
→ VIA EB McKEE Rd; SB CAPITOL Ave; WB ALUM ROCK Ave; ON-RAMP TO SB Rte 680 → VIA WB McKEE Rd; SB JACKSON Ave; ON-RAMP TO SB Rte 680

APPROVED FOR DETOUR CONSTRUCTION WORK ONLY

FOR NOTES AND LEGEND, SEE SHEET CS-1

CONSTRUCTION AREA SIGNS AND DETOUR PLAN

NO SCALE

CS-11

STATE OF CALIFORNIA - DEPARTMENT OF TRANSPORTATION
Caltrans
TRAFFIC

FUNCTIONAL SUPERVISOR: ROLAND AU-YEUNG
CALCULATED-DESIGNED BY: HENRY TAM
CHECKED BY: JERILYN STRUVEN
REVISED BY
DATE REVISED

LAST REVISION 01-25-12
DATE PLOTTED => 14-MAY-2012
TIME PLOTTED => 09:45

Dist	COUNTY	ROUTE	POST MILES TOTAL PROJECT	SHEET No.	TOTAL SHEETS
04	Ala,SCl	680	0.0/0.1, 0.1/9.9	97	319

REGISTERED CIVIL ENGINEER 2-13-12 DATE

5-14-12
PLANS APPROVAL DATE

REGISTERED PROFESSIONAL ENGINEER Jerilyn L. Struven No. 49964 Exp. 12-31-12 CIVIL STATE OF CALIFORNIA

THE STATE OF CALIFORNIA OR ITS OFFICERS OR AGENTS SHALL NOT BE RESPONSIBLE FOR THE ACCURACY OR COMPLETENESS OF SCANNED COPIES OF THIS PLAN SHEET.

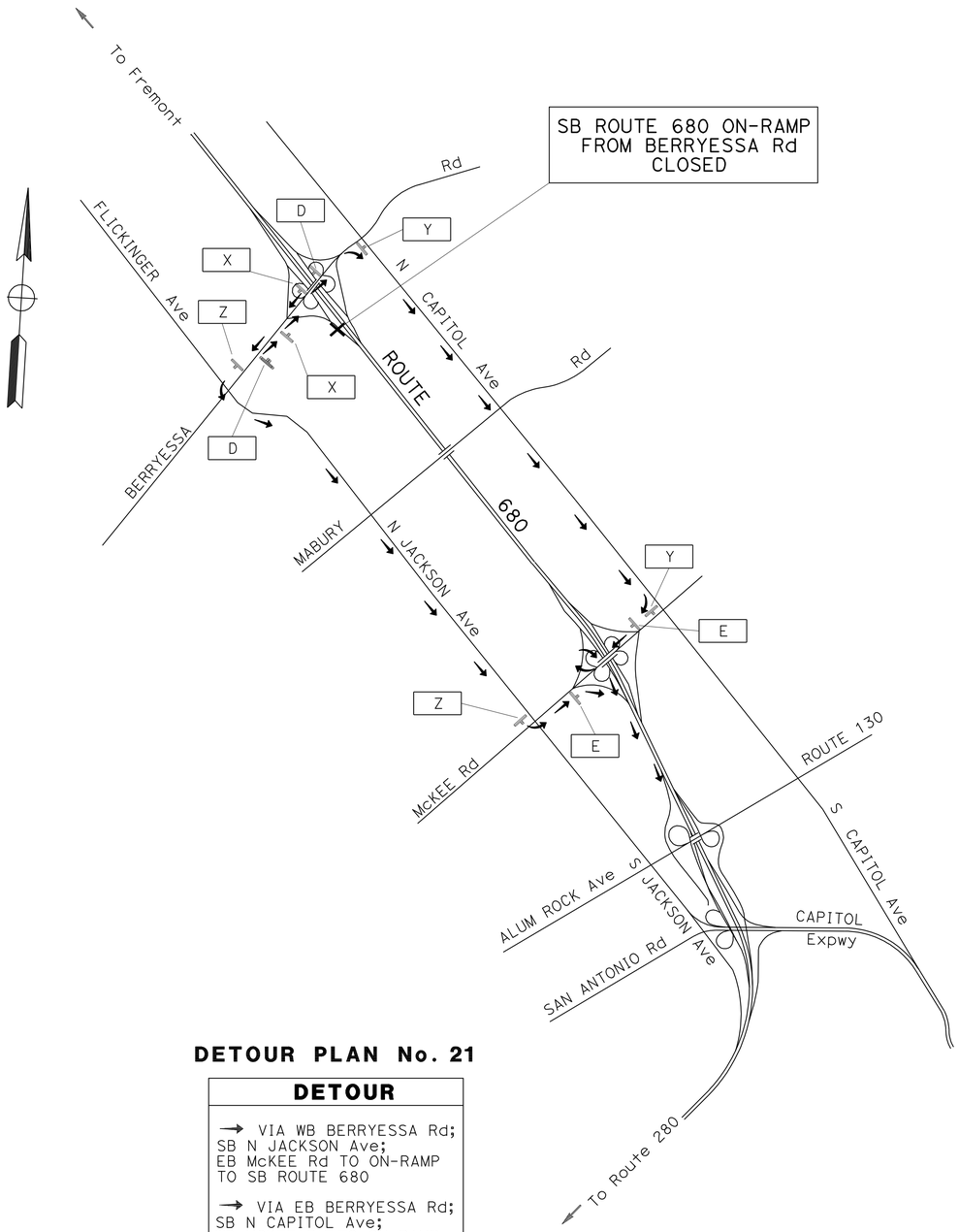

DETOUR PLAN No. 21

DETOUR

→ VIA WB BERRYESSA Rd;
SB N JACKSON Ave;
EB McKEE Rd TO ON-RAMP
TO SB ROUTE 680

→ VIA EB BERRYESSA Rd;
SB N CAPITOL Ave;
WB MCKEE Rd TO ON-RAMP
TO SB ROUTE 680

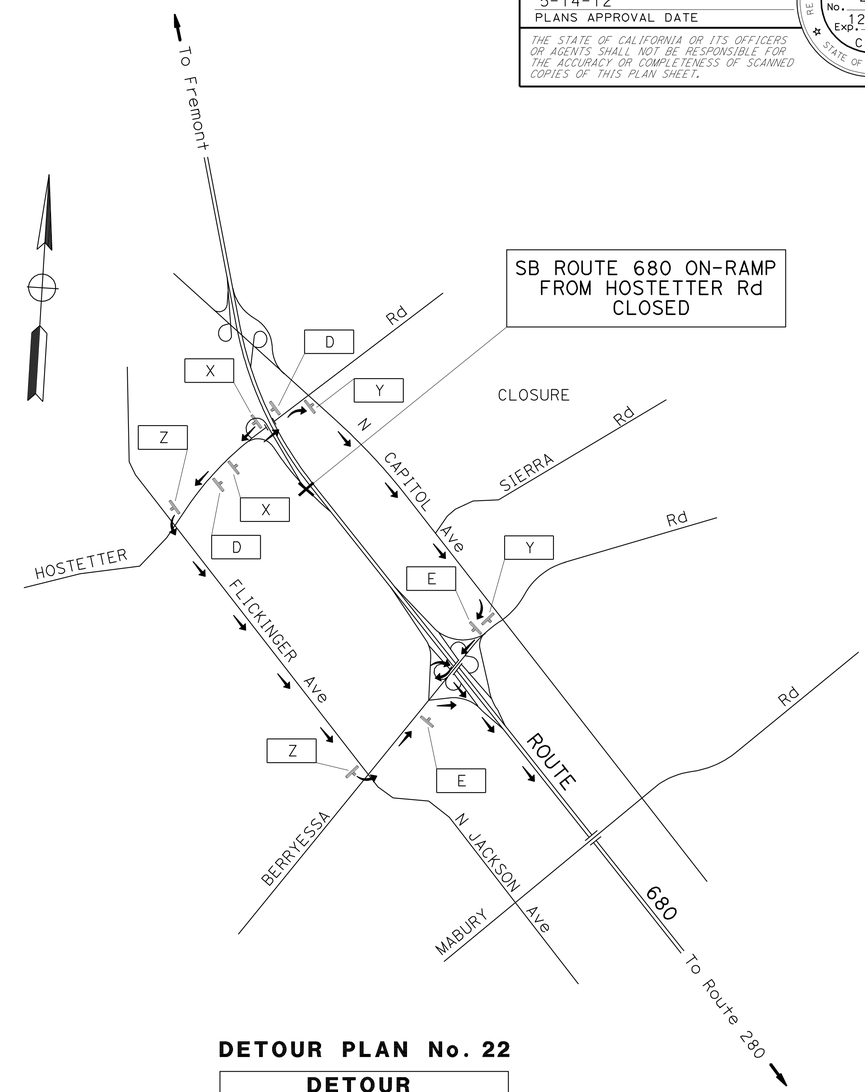

DETOUR PLAN No. 22

DETOUR

→ VIA WB HOSTETTER Rd;
SB FLICKINGER Ave;
EB BERRYESSA Rd TO ON-RAMP
TO SB ROUTE 680

→ VIA EB HOSTETTER Rd;
SB N CAPITOL Ave;
WB BERRYESSA Rd TO ON-RAMP
TO SB ROUTE 680

APPROVED FOR DETOUR CONSTRUCTION WORK ONLY

FOR NOTES AND LEGEND, SEE SHEET CS-1

CONSTRUCTION AREA SIGNS AND DETOUR PLAN

NO SCALE

CS-12

STATE OF CALIFORNIA - DEPARTMENT OF TRANSPORTATION
Caltrans® TRAFFIC

FUNCTIONAL SUPERVISOR: ROLAND AU-YEUNG
CALCULATED-DESIGNED BY: HENRY TAM
CHECKED BY: JERILYN STRUVEN
REVISED BY
DATE REVISED

LAST REVISION 12-21-11
DATE PLOTTED => 14-MAY-2012
TIME PLOTTED => 09:45

Dist	COUNTY	ROUTE	POST MILES TOTAL PROJECT	SHEET No.	TOTAL SHEETS
04	Ala,SCl	680	0.0/0.1, 0.1/9.9	98	319

REGISTERED CIVIL ENGINEER 2-13-12 DATE

5-14-12
PLANS APPROVAL DATE

REGISTERED PROFESSIONAL ENGINEER
Jerilyn L. Struven
No. 49964
Exp. 12-31-12
CIVIL
STATE OF CALIFORNIA

THE STATE OF CALIFORNIA OR ITS OFFICERS OR AGENTS SHALL NOT BE RESPONSIBLE FOR THE ACCURACY OR COMPLETENESS OF SCANNED COPIES OF THIS PLAN SHEET.

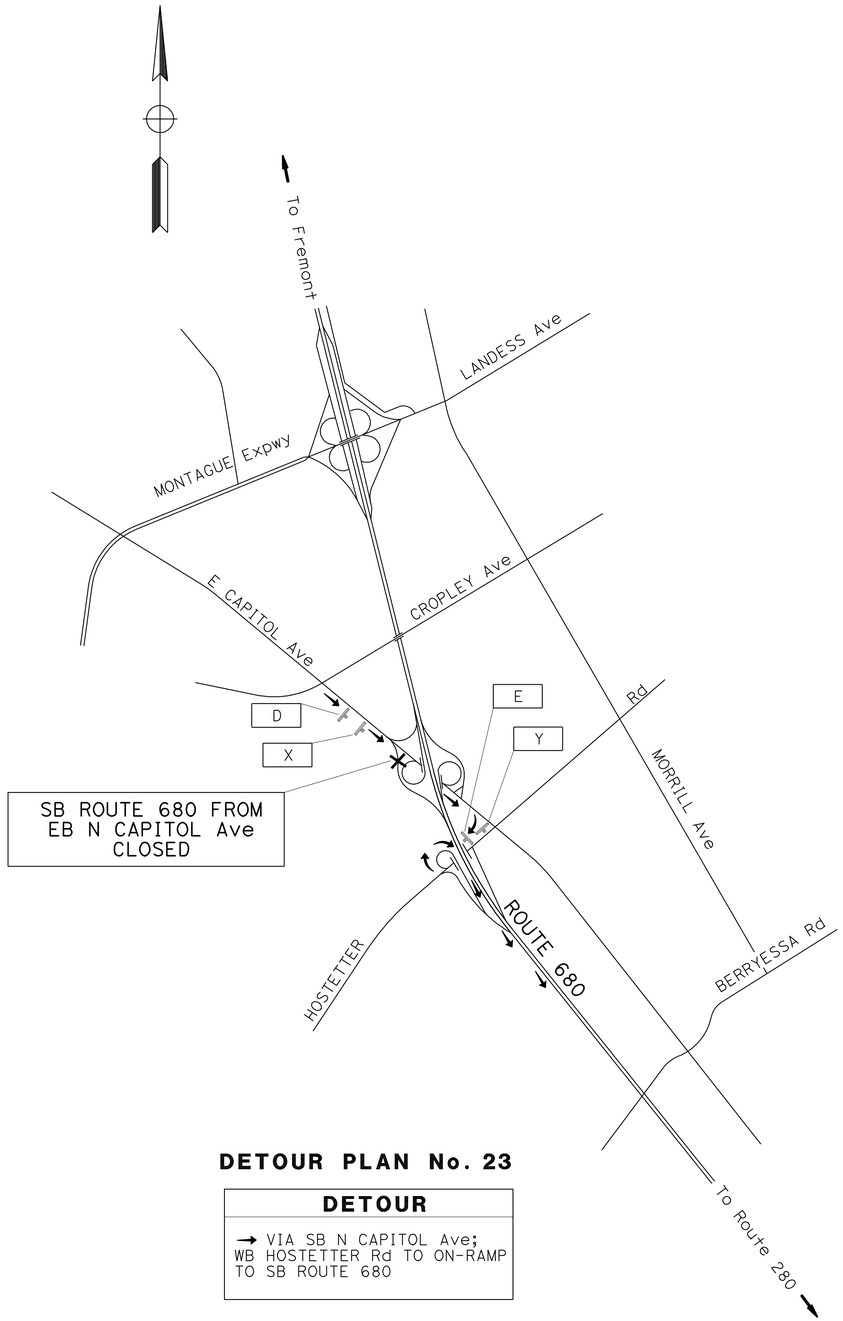

DETOUR PLAN No. 23

DETOUR

→ VIA SB N CAPITOL Ave;
WB HOSTETTER Rd TO ON-RAMP TO SB ROUTE 680

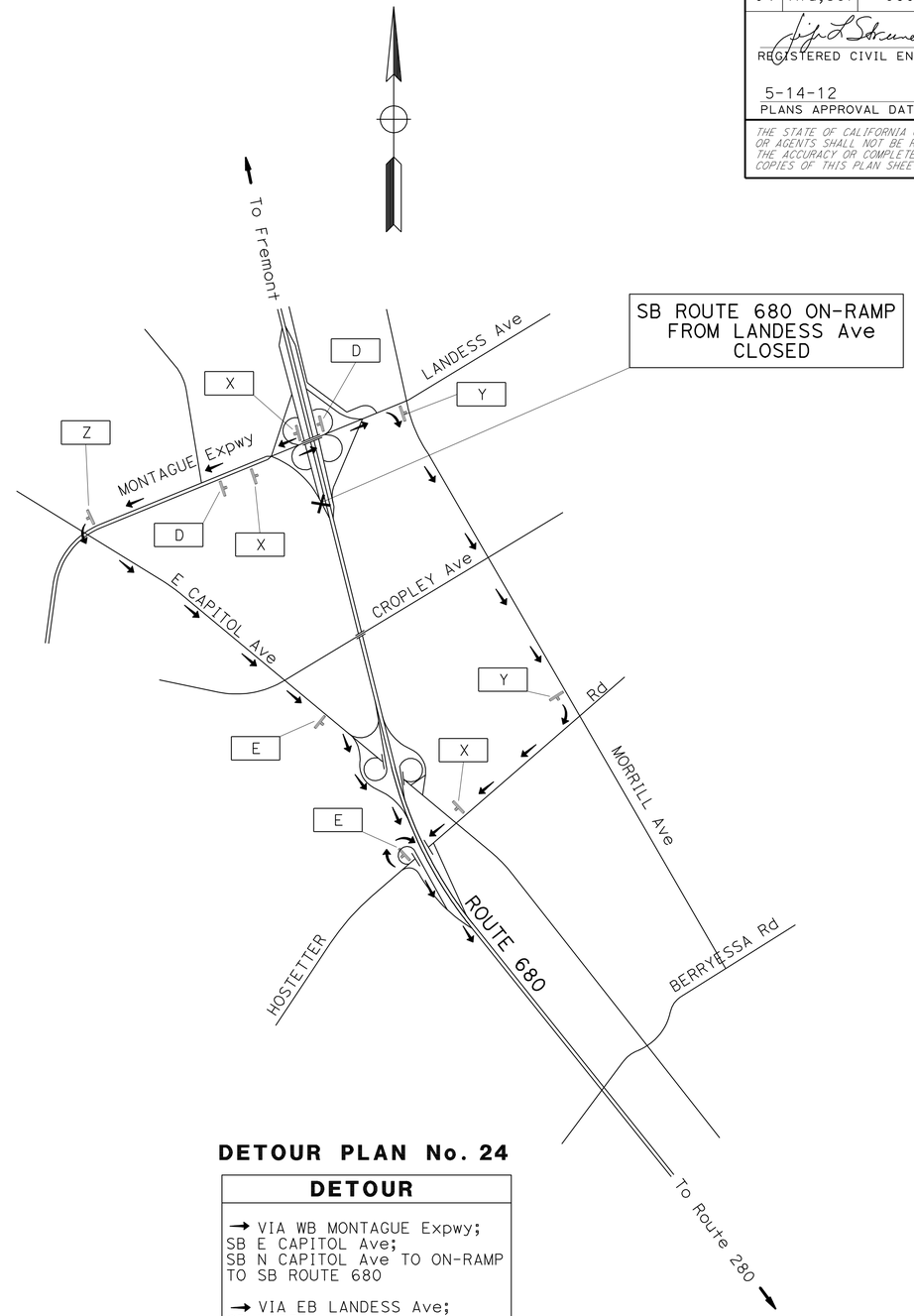

DETOUR PLAN No. 24

DETOUR

→ VIA WB MONTAGUE Expwy;
SB E CAPITOL Ave;
SB N CAPITOL Ave TO ON-RAMP TO SB ROUTE 680

→ VIA EB LANDESS Ave;
SB MORRILL Ave;
WB HOSTETTER Rd TO ON-RAMP TO SB ROUTE 680

CONSTRUCTION AREA SIGNS AND DETOUR PLAN

NO SCALE

CS-13

APPROVED FOR DETOUR CONSTRUCTION WORK ONLY

FOR NOTES AND LEGEND, SEE SHEET CS-1

STATE OF CALIFORNIA - DEPARTMENT OF TRANSPORTATION
Caltrans
TRAFFIC

FUNCTIONAL SUPERVISOR: ROLAND AU-YEUNG
CALCULATED-DESIGNED BY: HENRY TAM
CHECKED BY: JERILYN STRUVEN
REVISED BY
DATE REVISED

LAST REVISION 12-21-11
DATE PLOTTED => 14-MAY-2012
TIME PLOTTED => 09:45

Dist	COUNTY	ROUTE	POST MILES TOTAL PROJECT	SHEET No.	TOTAL SHEETS
04	Ala,SCl	680	0.0/0.1, 0.1/9.9	99	319

REGISTERED CIVIL ENGINEER 2-13-12 DATE

5-14-12
PLANS APPROVAL DATE

REGISTERED PROFESSIONAL ENGINEER
Jerilyn L. Struven
No. 49964
Exp. 12-31-12
CIVIL
STATE OF CALIFORNIA

THE STATE OF CALIFORNIA OR ITS OFFICERS OR AGENTS SHALL NOT BE RESPONSIBLE FOR THE ACCURACY OR COMPLETENESS OF SCANNED COPIES OF THIS PLAN SHEET.

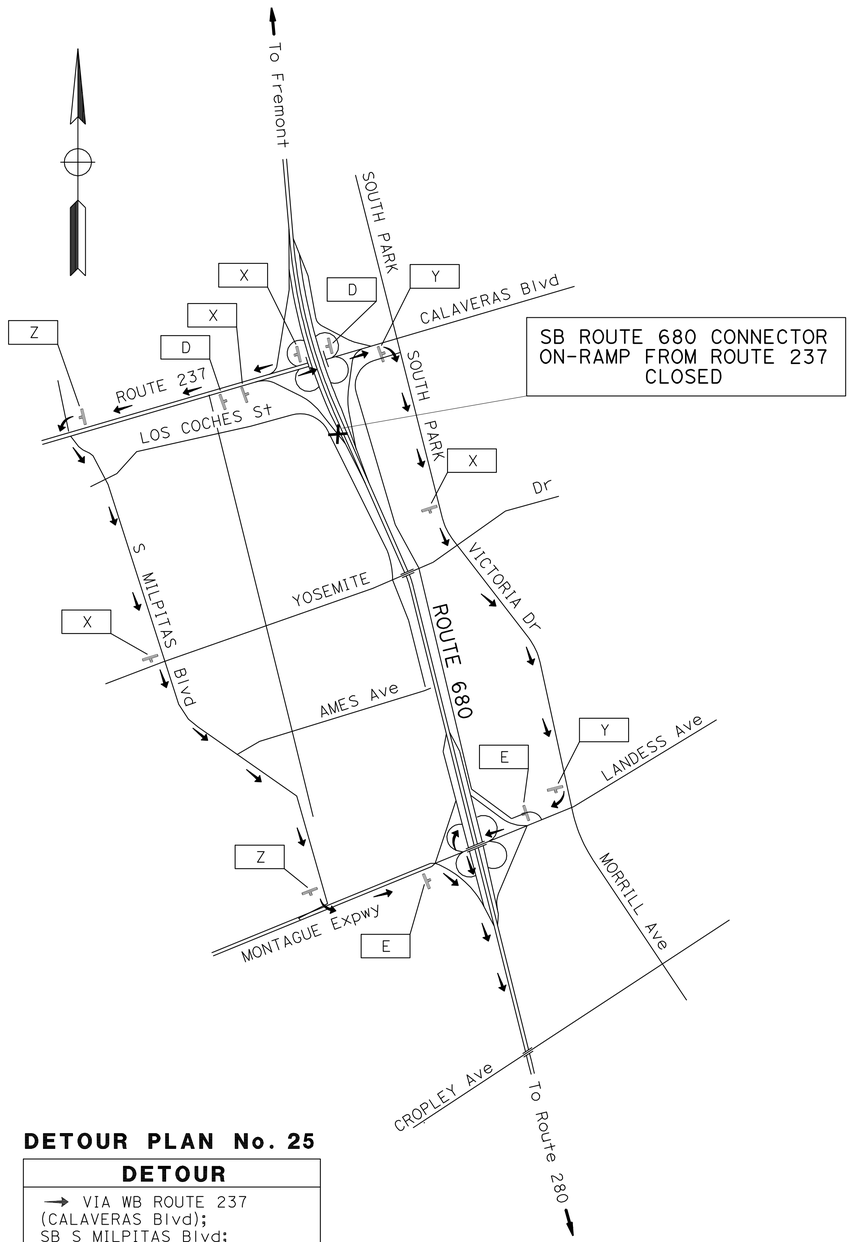

DETOUR PLAN No. 25

DETOUR
→ VIA WB ROUTE 237 (CALAVERAS Blvd); SB S MILPITAS Blvd; MONTAGUE Expwy TO ON-RAMP TO SB ROUTE 680
→ VIA EB ROUTE 237 (CALAVERAS Blvd); SB S PARK VICTORIA Dr; WB LANDESS Ave TO ON-RAMP TO SB ROUTE 680

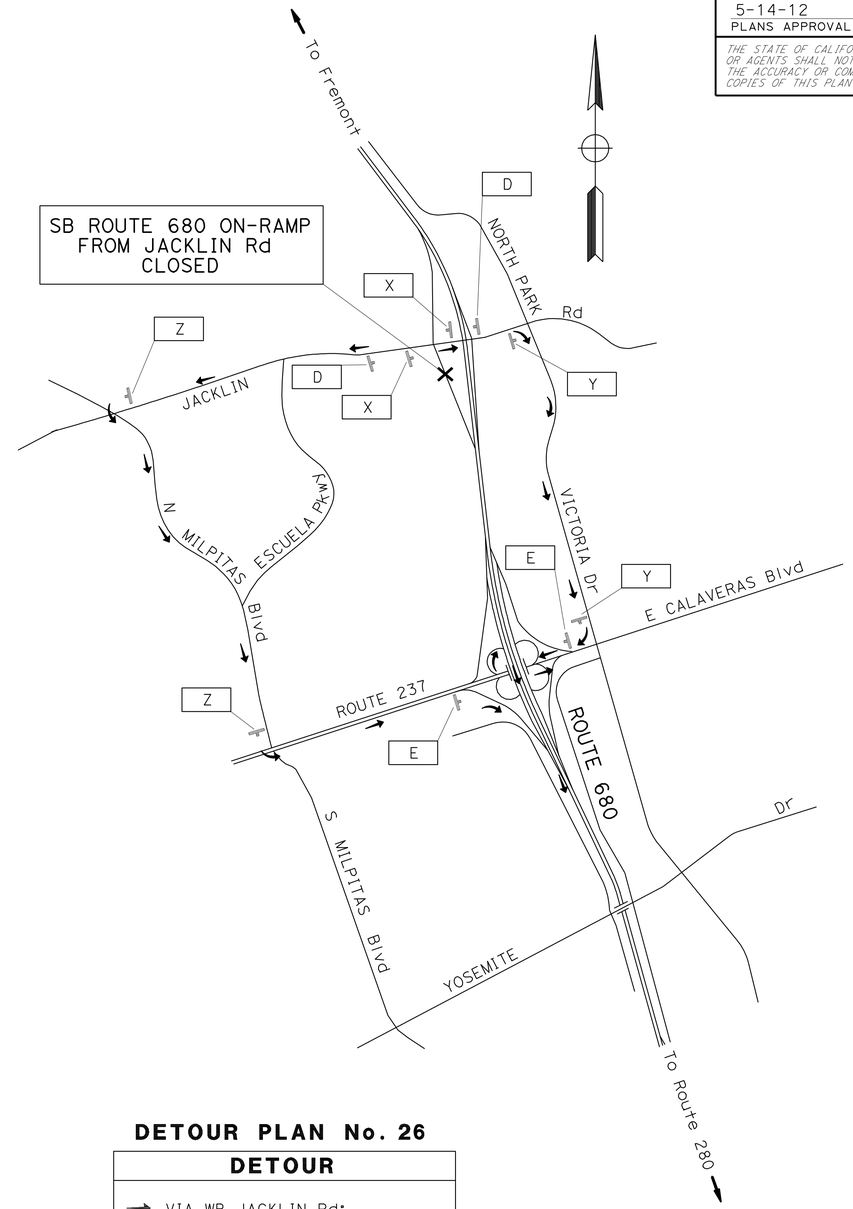

DETOUR PLAN No. 26

DETOUR
→ VIA WB JACKLIN Rd; SB N MILPITAS Blvd; EB CALAVERAS Blvd TO ON-RAMP TO SB ROUTE 680
→ VIA EB JACKLIN Rd; SB N PARK VICTORIA Dr; WB CALAVERAS Blvd TO ON-RAMP TO SB ROUTE 680

APPROVED FOR DETOUR CONSTRUCTION WORK ONLY

FOR NOTES AND LEGEND, SEE SHEET CS-1

CONSTRUCTION AREA SIGNS AND DETOUR PLAN

NO SCALE

CS-14

STATE OF CALIFORNIA - DEPARTMENT OF TRANSPORTATION
Caltrans
TRAFFIC

FUNCTIONAL SUPERVISOR: ROLAND AU-YEUNG
CALCULATED-DESIGNED BY: HENRY TAM
CHECKED BY: JERILYN STRUVEN
REVISED BY
DATE REVISED

LAST REVISION 01-30-12
DATE PLOTTED => 14-MAY-2012
TIME PLOTTED => 09:45

Dist	COUNTY	ROUTE	POST MILES TOTAL PROJECT	SHEET No.	TOTAL SHEETS
04	Ala,SCl	680	0.0/0.1, 0.1/9.9	100	319

REGISTERED CIVIL ENGINEER 2-13-12 DATE

5-14-12
PLANS APPROVAL DATE

REGISTERED PROFESSIONAL ENGINEER
Jerilyn L. Struven
No. 49964
Exp. 12-31-12
CIVIL
STATE OF CALIFORNIA

THE STATE OF CALIFORNIA OR ITS OFFICERS OR AGENTS SHALL NOT BE RESPONSIBLE FOR THE ACCURACY OR COMPLETENESS OF SCANNED COPIES OF THIS PLAN SHEET.

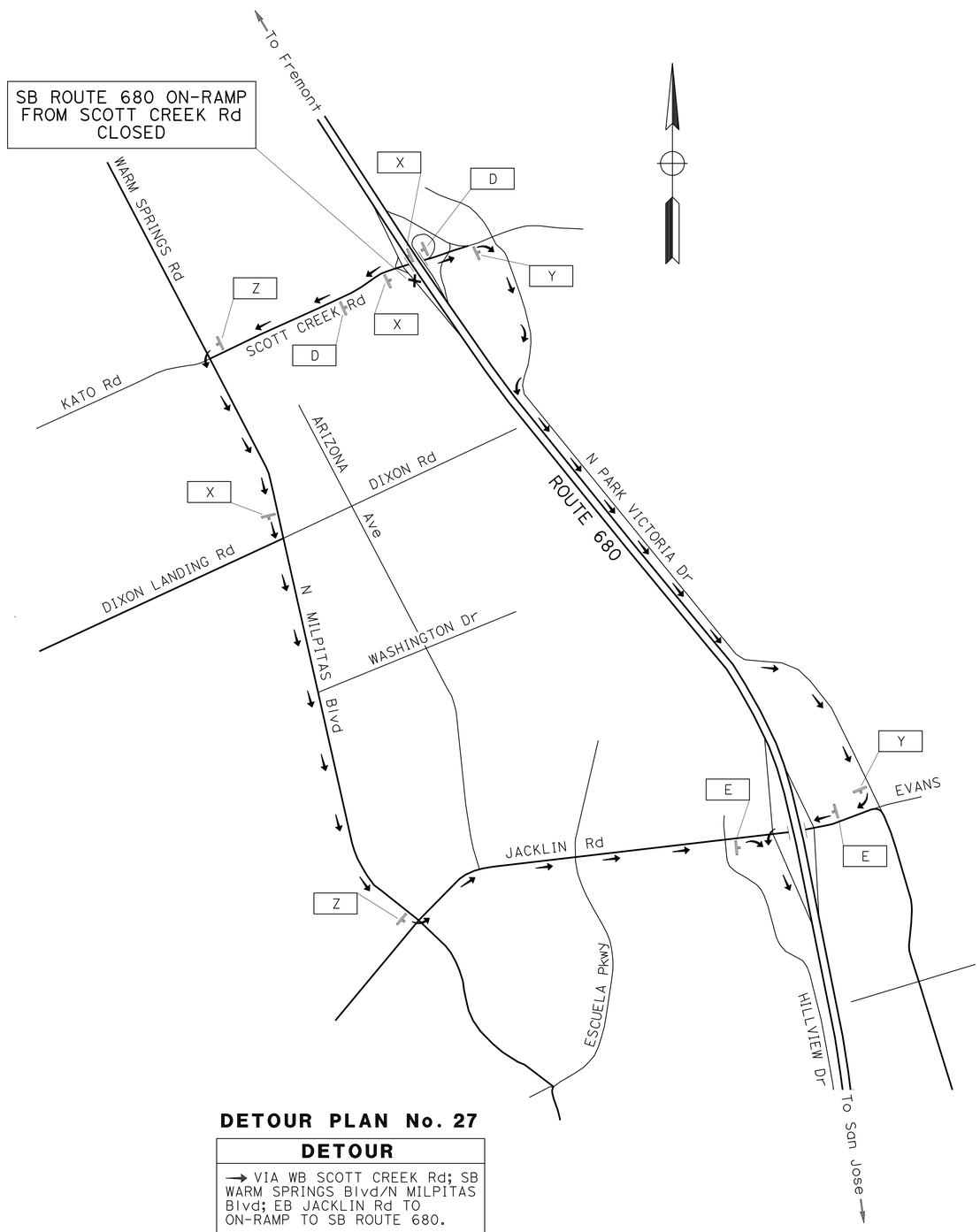

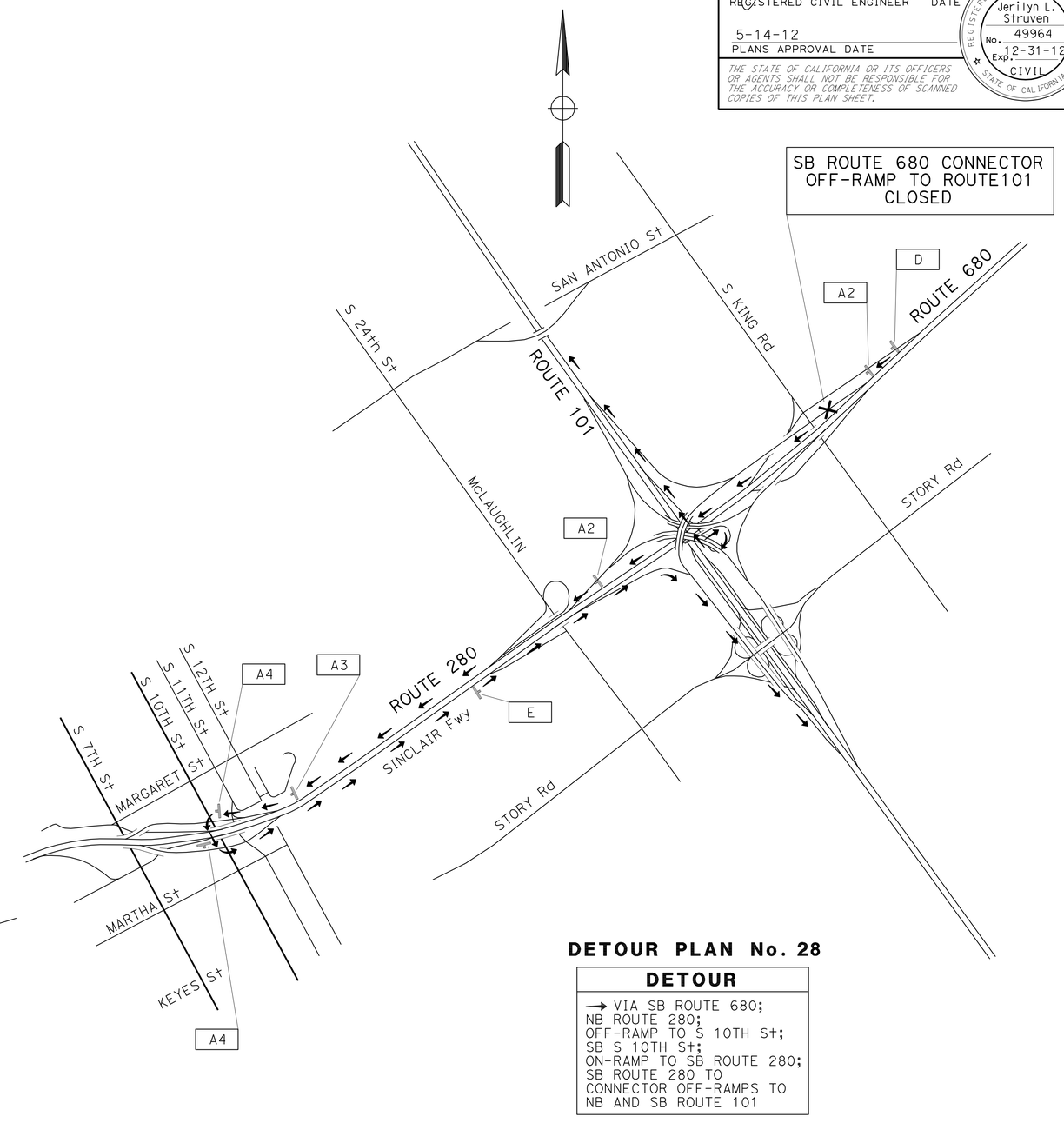

DETOUR PLAN No. 27

DETOUR

→ VIA WB SCOTT CREEK Rd; SB WARM SPRINGS Blvd/N MILPITAS Blvd; EB JACKLIN Rd TO ON-RAMP TO SB ROUTE 680.

→ VIA EB SCOTT CREEK Rd; SB N PARK VICTORIA Dr; WB JACKLIN Rd TO ON-RAMP TO SB ROUTE 680.

DETOUR PLAN No. 28

DETOUR

→ VIA SB ROUTE 680; NB ROUTE 280; OFF-RAMP TO S 10TH St; SB S 10TH St; ON-RAMP TO SB ROUTE 280; SB ROUTE 280 TO CONNECTOR OFF-RAMPS TO NB AND SB ROUTE 101

APPROVED FOR DETOUR CONSTRUCTION WORK ONLY

FOR NOTES AND LEGEND, SEE SHEET CS-1

CONSTRUCTION AREA SIGNS AND DETOUR PLAN

NO SCALE

CS-15

STATE OF CALIFORNIA - DEPARTMENT OF TRANSPORTATION
Caltrans®
TRAFFIC

FUNCTIONAL SUPERVISOR: ROLAND AU-YEUNG
CALCULATED-DESIGNED BY: HENRY TAM
CHECKED BY: JERILYN STRUVEN
REVISED BY
DATE REVISED

LAST REVISION 01-10-12
DATE PLOTTED => 14-MAY-2012
TIME PLOTTED => 09:45