Dist	COUNTY	ROUTE	POST MILES TOTAL PROJECT	SHEET No.	TOTAL SHEETS
10	SJ	4,99	R19.5/R20.1, 15.0/18.6	801	1414

REGISTERED CIVIL ENGINEER 12-05-11 DATE

3-26-12
PLANS APPROVAL DATE

REGISTERED PROFESSIONAL ENGINEER SEAN M. PLEDGER No. 56328 Exp. 12-31-12 CIVIL STATE OF CALIFORNIA

THE STATE OF CALIFORNIA OR ITS OFFICERS OR AGENTS SHALL NOT BE RESPONSIBLE FOR THE ACCURACY OR COMPLETENESS OF SCANNED COPIES OF THIS PLAN SHEET.

HMA APRON

LOCATION	PLACE HMA (Misc AREA) AREA SQYD	HMA TON
"R99" Sta 314+00.00 63.0′ Lt	9.0	1.5
"R99" Sta 317+00.00 63.0′ Lt	9.0	1.5
"R99" Sta 320+00.00 62.0′ Rt	8.7	1.5
"R99" Sta 323+00.00 62.5′ Rt	8.8	1.5
"R99" Sta 325+00.00 62.5′ Lt	8.9	1.5
"R99" Sta 325+00.00 62.0′ Rt	8.8	1.5
"R99" Sta 328+00.00 63.0′ Rt	8.8	1.5
"R99" Sta 329+28.00 63.0′ Lt	10.2	1.7
"R99" Sta 330+00.00 63.0′ Lt	10.2	1.7
"R99" Sta 330+72.00 63.0′ Lt	10.2	1.7
"R99" Sta 336+00.00 63.0′ Lt	10.3	1.7
"R99" Sta 339+00.00 62.8′ Rt	9.1	1.5
"R99" Sta 342+00.00 62.8′ Rt	9.0	1.5
"R99" Sta 348+75.00 64.5′ Lt	10.0	1.7
"R99" Sta 348+75.00 62.0′ Rt	9.3	1.6
"R99" Sta 351+75.00 62.0′ Rt	8.9	1.5
"R99" Sta 354+75.00 63.0′ Lt	10.7	1.8
"R99" Sta 354+75.00 62.0′ Rt	9.4	1.6
"R99" Sta 356+50.00 62.0′ Rt	9.4	1.6
"R99" Sta 360+75.00 63.0′ Lt	10.2	1.7
"MA2" Sta 370+00.00 30.2′ Rt	10.0	1.7
"MA2" Sta 373+00.00 30.2′ Rt	10.0	1.7
"MA2" Sta 376+00.00 30.2′ Rt	10.0	1.7
"R99WF" Sta 13+75.00 27.0′ Lt	8.5	1.4
"R99WF" Sta 16+00.00 27.0′ Lt	8.5	1.4
"R99WF" Sta 20+50.00 27.0′ Lt	7.8	1.3
"R99WF" Sta 22+50.00 27.0′ Lt	7.8	1.3
"R99WF" Sta 23+75.00 29.5′ Lt	9.7	1.6
"R99WF" Sta 34+30.94 32.8′ Lt	10.0	1.7
"R99WF" Sta 36+14.77 30.1′ Lt	10.0	1.7
"R99WF" Sta 39+32.62 27.0′ Lt	8.5	1.4
"R99WF" Sta 41+00.00 27.0′ Lt	8.5	1.4
"MAR" Sta 28+86.30 58.8′ Rt	8.5	1.4
"MUN1" Sta 13+25.00 26.0′ Rt	5.7	1.0
"MUN1" Sta 25+00.00 27.0′ Rt	7.8	1.3
SUBTOTAL 1	320.2	53.8

HMA APRON

LOCATION	PLACE HMA (Misc AREA) AREA SQYD	HMA TON
"MUN1" Sta 25+60.00 27.0′ Rt	7.8	1.3
"MUN1" Sta 28+17.00 27.0′ Rt	5.9	1.0
"MUN1" Sta 28+75.00 27.0′ Rt	7.8	1.3
"MUN1" Sta 30+75.00 27.0′ Rt	7.8	1.3
"MUN1" Sta 32+15.00 27.0′ Lt	7.1	1.2
"MUN1" Sta 32+75.00 27.0′ Lt	7.8	1.3
"MUN1" Sta 33+75.00 27.0′ Lt	7.8	1.3
"MUN1" Sta 34+75.00 27.0′ Lt	7.8	1.3
"MUN1" Sta 33+75.00 27.0′ Rt	7.8	1.3
"MUN1" Sta 34+75.00 27.0′ Rt	7.6	1.3
"MUN1" Sta 35+50.00 27.0′ Rt	7.8	1.3
"MUN1" Sta 38+00.00 27.0′ Rt	7.8	1.3
"R99" Sta 429+50.00 127.4′ Rt	8.9	1.5
"GG1" Sta 434+54.92 13.9′ Rt	10.0	1.7
"GG1" Sta 434+50.00 117.2′ Lt	8.9	1.5
"GG2" Sta 426+50.00 22.9′ Lt	10.0	1.7
"GG2" Sta 428+00.00 43.7′ Lt	8.9	1.5
"GG2" Sta 433+25.00 100.0′ Rt	8.9	1.5
"GG3" Sta 437+50.00 52.0′ Lt	10.0	1.7
"GG3" Sta 439+50.00 52.0′ Lt	10.0	1.7
"SEC" Sta 19+24.52 21.7′ Lt	7.2	1.2
"GOLD" Sta 61+25.00 46.0′ Lt	6.7	1.1
"GOLD" Sta 62+30.00 46.0′ Lt	6.7	1.1
"GOLD" Sta 64+80.00 46.0′ Lt	6.4	1.1
"GOLD" Sta 67+08.25 38.6′ Lt	7.0	1.1
"GOLD" Sta 68+75.00 36.6′ Lt	8.9	1.5
"R99" Sta 453+00.00 78.0′ Lt	10.0	1.7
"R99" Sta 455+50.00 78.0′ Lt	10.0	1.7
"R99" Sta 457+50.00 78.0′ Lt	8.9	1.5
"R99" Sta 458+50.00 90.0′ Lt	10.0	1.7
"R99" Sta 459+25.00 129.6′ Lt	7.6	1.3
"MAIN" Sta 23+60.00 68.8′ Rt	10.0	1.7
"R99" Sta 480+46.22 84.7′ Lt	8.9	1.5
"R99" Sta 483+44.79 111.7′ Lt	8.9	1.5
"R99" Sta 455+25.54 106.4′ Rt	8.6	1.5
SUBTOTAL 2	292.2	49.2
SUBTOTAL 1	320.2	53.8
TOTAL	612.4(a)	103.0(a)

(a) QUANTITIES SHOWN HERE INCLUDED IN PLACE HMA (Misc AREA) TABLE.

SUMMARY OF QUANTITIES
Q-12

STATE OF CALIFORNIA - DEPARTMENT OF TRANSPORTATION
Caltrans 06-DESIGN
FUNCTIONAL SUPERVISOR: MARTIN NISHIKAWA
CALCULATED-DESIGNED BY: HAISAM SOLIMAN
CHECKED BY: SEAN PLEDGER
REVISED BY / DATE REVISED

LAST REVISION 05-26-11 | DATE PLOTTED => 29-MAR-2012 | TIME PLOTTED => 17:37

Dist	COUNTY	ROUTE	POST MILES TOTAL PROJECT	SHEET No.	TOTAL SHEETS
10	SJ	4,99	R19.5/R20.1, 15.0/18.6	802	1414

REGISTERED CIVIL ENGINEER 12-05-11 DATE

3-26-12
PLANS APPROVAL DATE

REGISTERED PROFESSIONAL ENGINEER SEAN M. PLEDGER No. 56328 Exp. 12-31-12 CIVIL STATE OF CALIFORNIA

THE STATE OF CALIFORNIA OR ITS OFFICERS OR AGENTS SHALL NOT BE RESPONSIBLE FOR THE ACCURACY OR COMPLETENESS OF SCANNED COPIES OF THIS PLAN SHEET.

NOTES:

1. FOR ACCURATE RIGHT OF WAY DATA, CONTACT RIGHT OF WAY ENGINEERING AT THE DISTRICT OFFICE.
2. FG2 CONTROLLED BY ROADWAY DESIGN.

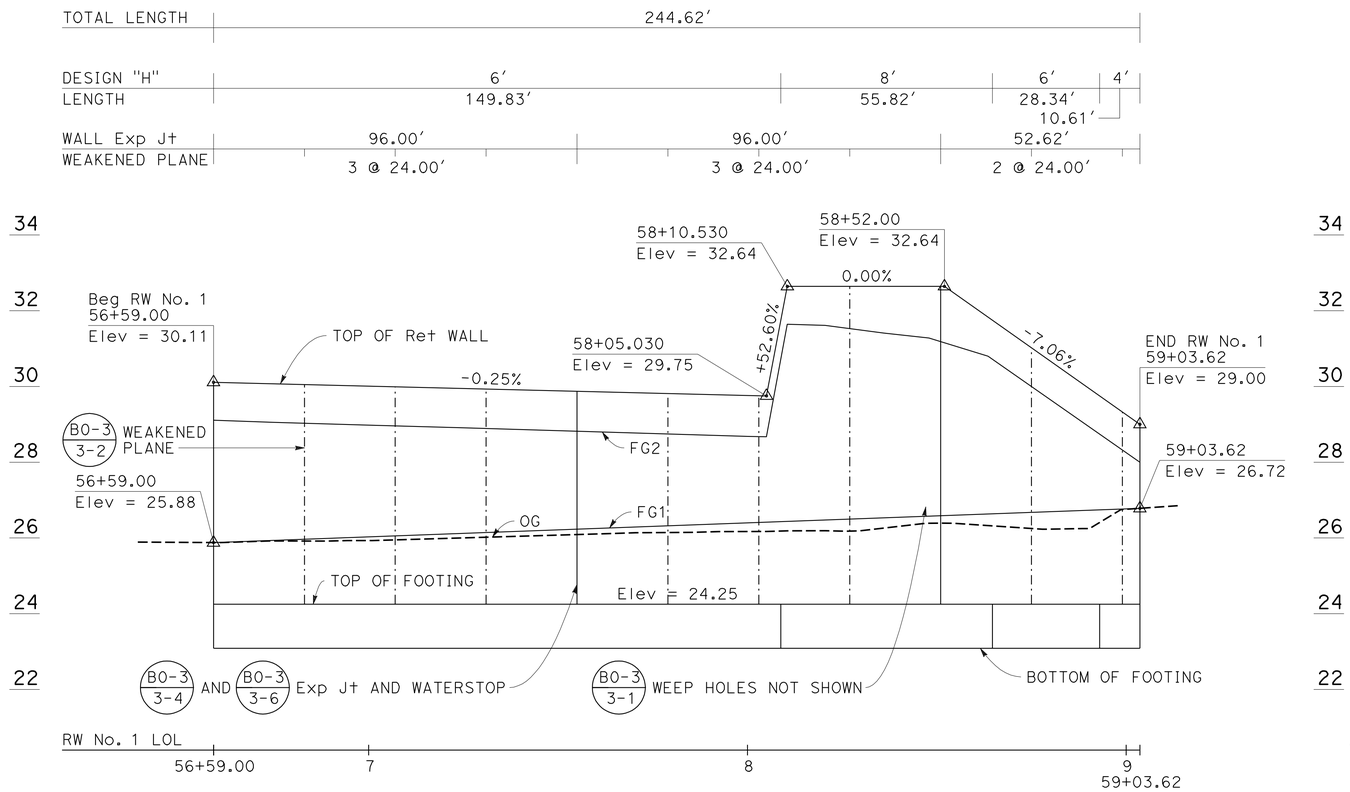

ELEVATION

SCALE: Horiz 1" = 20′
Vert 1" = 2′

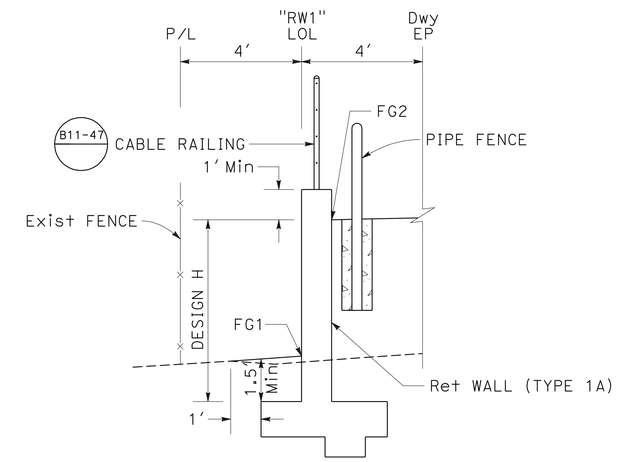

"RW1" Sta 58+47.93 TO "RW1" Sta 59+03.62

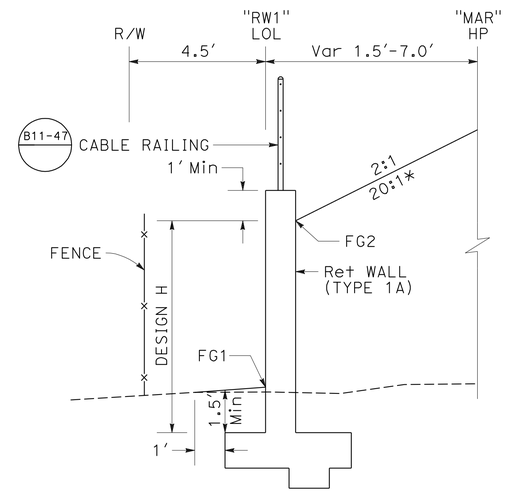

"RW1" Sta 56+59.00 TO "RW1" Sta 58+47.93
* "RW1" Sta 58+10.53 TO "RW1" Sta 58+47.93

TYPICAL CROSS SECTION

NO SCALE

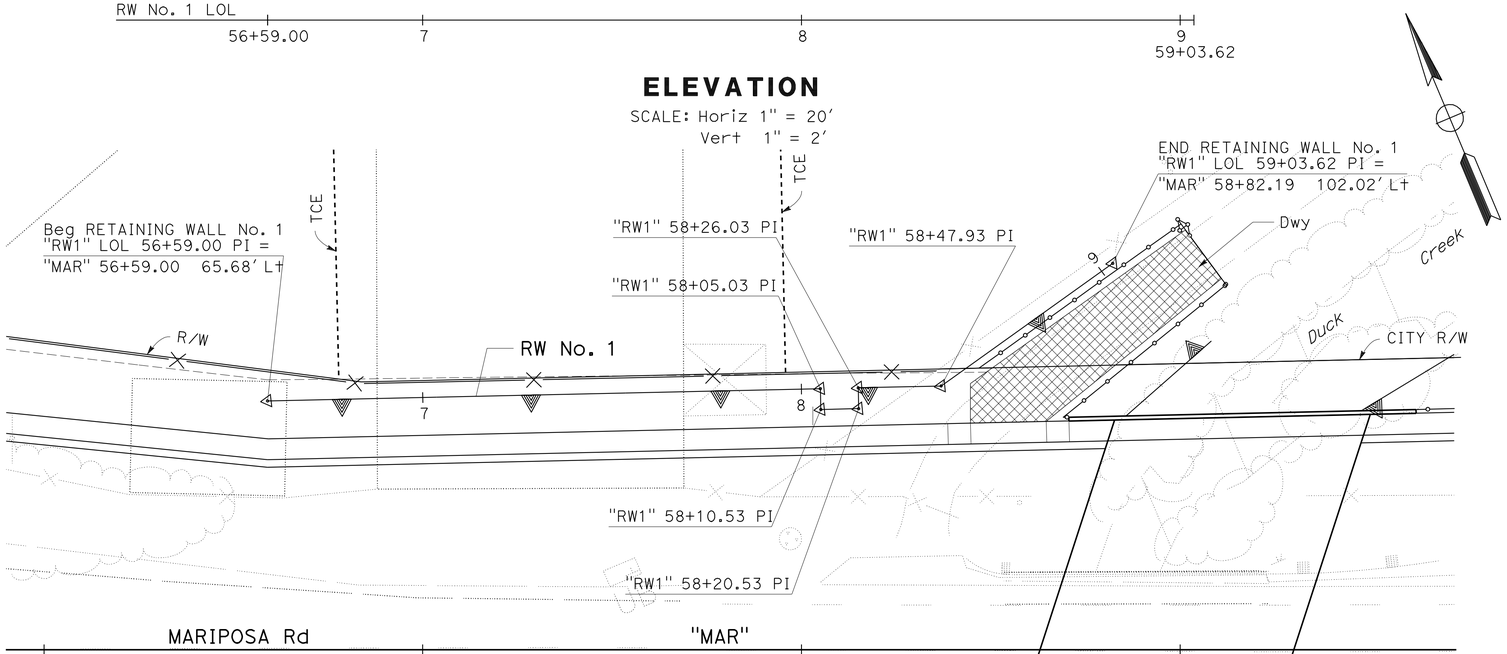

PLAN

SCALE: 1" = 20′

APPROVED FOR RETAINING WALL WORK ONLY

RETAINING WALL PLAN
(RETAINING WALL No. 1)

SCALE AS SHOWN

R-1

STATE OF CALIFORNIA - DEPARTMENT OF TRANSPORTATION
Caltrans
06-DESIGN

FUNCTIONAL SUPERVISOR: MARTIN NISHIKAWA
CALCULATED-DESIGNED BY: LOREN E VINSON
CHECKED BY: SEAN PLEDGER
REVISED BY
DATE REVISED

LAST REVISION 05-26-11
DATE PLOTTED => 29-MAR-2012
TIME PLOTTED => 17:37

Dist	COUNTY	ROUTE	POST MILES TOTAL PROJECT	SHEET No.	TOTAL SHEETS
10	SJ	4,99	R19.5/R20.1, 15.0/18.6	803	1414

Sean Pledger 12-05-11
REGISTERED CIVIL ENGINEER DATE

3-26-12
PLANS APPROVAL DATE

REGISTERED PROFESSIONAL ENGINEER
SEAN M. PLEDGER
No. 56328
Exp. 12-31-12
CIVIL
STATE OF CALIFORNIA

THE STATE OF CALIFORNIA OR ITS OFFICERS OR AGENTS SHALL NOT BE RESPONSIBLE FOR THE ACCURACY OR COMPLETENESS OF SCANNED COPIES OF THIS PLAN SHEET.

RETAINING WALL No. 1 QUANTITIES

LOCATION	STRUCTURAL CONCRETE, RETAINING WALL	BAR REINFORCING STEEL (RETAINING WALL)	STRUCTURE EXCAVATION (RETAINING WALL)	STRUCTURE BACKFILL (RETAINING WALL)
	CY	LB	CY	CY
RW No. 1 "RW1" Sta 56+59.00 TO "RW1" Sta 59+03.62	112	8708	180	221

APPROVED FOR RETAINING WALL WORK ONLY

RETAINING WALL QUANTITIES
(RETAINING WALL No. 1)

R-2

LOREN E VINSON — REVISED BY
SEAN PLEDGER — DATE REVISED
CALCULATED-DESIGNED BY
CHECKED BY
FUNCTIONAL SUPERVISOR
MARTIN NISHIKAWA

STATE OF CALIFORNIA - DEPARTMENT OF TRANSPORTATION
Caltrans®
06-DESIGN

LAST REVISION 05-26-11
DATE PLOTTED => 29-MAR-2012
TIME PLOTTED => 17:37

Dist	COUNTY	ROUTE	POST MILES TOTAL PROJECT	SHEET No.	TOTAL SHEETS
10	SJ	4,99	R19.5/R20.1, 15.0/18.6	804	1414

REGISTERED CIVIL ENGINEER DATE 12-05-11

3-26-12
PLANS APPROVAL DATE

REGISTERED PROFESSIONAL ENGINEER SEAN M. PLEDGER No. 56328 Exp. 12-31-12 CIVIL STATE OF CALIFORNIA

THE STATE OF CALIFORNIA OR ITS OFFICERS OR AGENTS SHALL NOT BE RESPONSIBLE FOR THE ACCURACY OR COMPLETENESS OF SCANNED COPIES OF THIS PLAN SHEET.

NOTE:

FOR ACCURATE RIGHT OF WAY DATA, CONTACT RIGHT OF WAY ENGINEERING AT THE DISTRICT OFFICE.

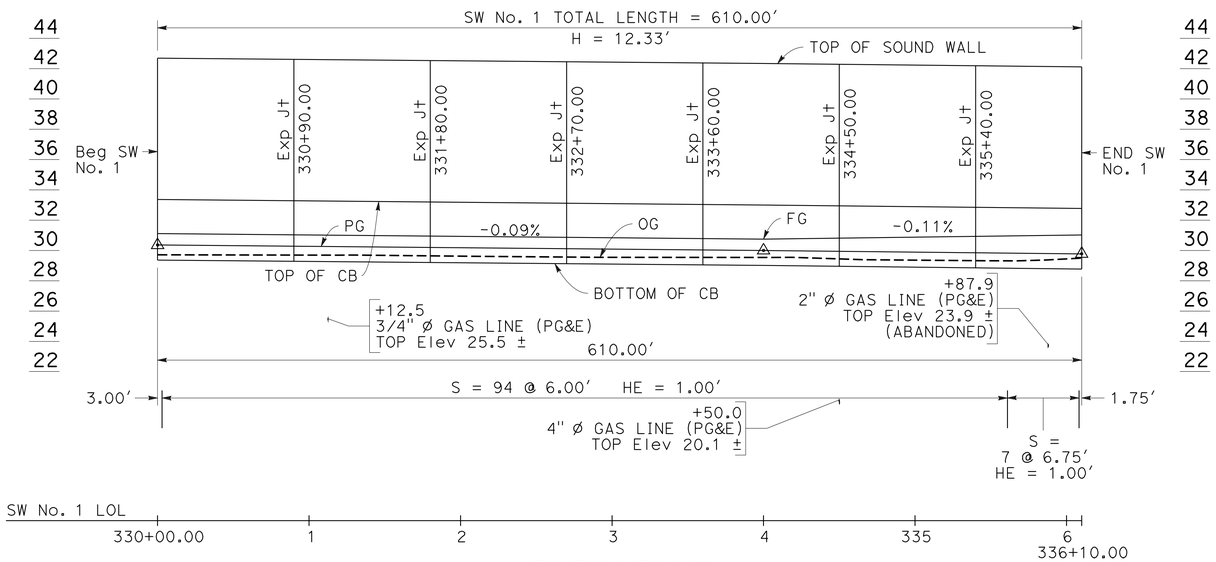

ELEVATION

SCALE: Horiz 1"=50'
Vert 1"=5'

SOUND WALL
No. 1 ELEVATIONS

"SW1" LOL	PG	FG	TOP OF BARRIER	TOP OF WALL
VPI 330+00.00	30.36	31.11	33.36	42.69
330+50.00	30.32	31.07	33.32	42.65
331+00.00	30.27	31.02	33.27	42.61
331+50.00	30.23	30.98	33.23	42.56
332+00.00	30.19	30.94	33.19	42.52
332+50.00	30.14	30.89	33.14	42.47
333+00.00	30.10	30.85	33.10	42.43
333+50.00	30.05	30.80	33.05	42.39
VPI 334+00.00	30.01	30.76	33.01	42.34
334+50.00	29.96	30.82	32.96	42.29
335+00.00	29.90	30.89	32.90	42.23
335+50.00	29.85	30.95	32.85	42.18
336+00.00	29.79	31.02	32.79	42.12
VPI 336+10.00	29.78	31.03	32.78	42.11

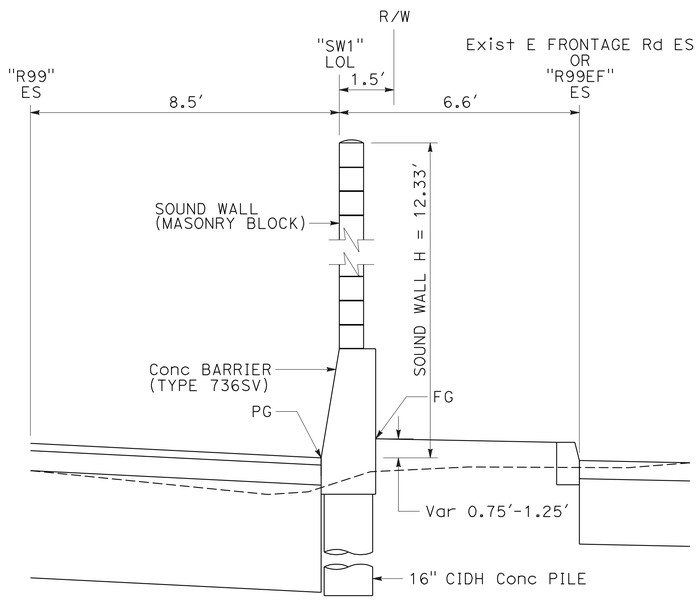

TYPICAL CROSS SECTION

"SW1" Sta 330+00.00 TO "SW1" Sta 336+10.00

NO SCALE

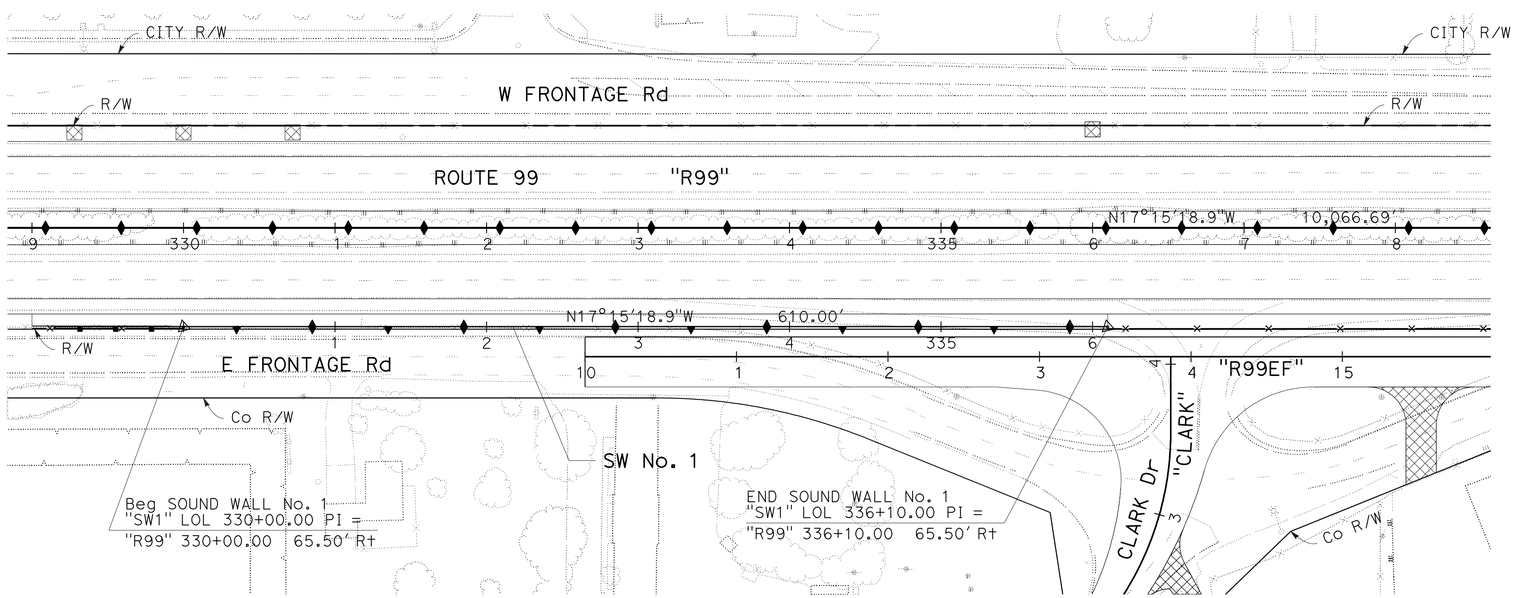

PLAN

SCALE: 1"=50'

APPROVED FOR SOUND WALL WORK ONLY

SOUND WALL PLAN
(SOUND WALL No. 1)

SCALE AS SHOWN

SW-1

STATE OF CALIFORNIA - DEPARTMENT OF TRANSPORTATION
06-DESIGN
Caltrans

FUNCTIONAL SUPERVISOR: MARTIN NISHIKAWA
CALCULATED-DESIGNED BY: LOREN E VINSON
CHECKED BY: SEAN PLEDGER
REVISED BY
DATE REVISED

LAST REVISION 05-26-11
DATE PLOTTED => 29-MAR-2012
TIME PLOTTED => 17:37

Dist	COUNTY	ROUTE	POST MILES TOTAL PROJECT	SHEET No.	TOTAL SHEETS
10	SJ	4,99	R19.5/R20.1, 15.0/18.6	805	1414

Sean Pledger 12-05-11
REGISTERED CIVIL ENGINEER DATE

3-26-12
PLANS APPROVAL DATE

REGISTERED PROFESSIONAL ENGINEER SEAN M. PLEDGER No. 56328 Exp. 12-31-12 CIVIL STATE OF CALIFORNIA

THE STATE OF CALIFORNIA OR ITS OFFICERS OR AGENTS SHALL NOT BE RESPONSIBLE FOR THE ACCURACY OR COMPLETENESS OF SCANNED COPIES OF THIS PLAN SHEET.

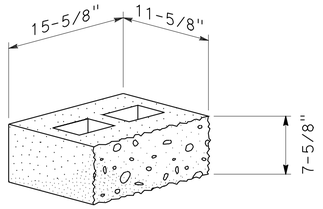

'A' BLOCK
SPLIT FACE ONE SIDE
12 X 8 X 16 NOMINAL

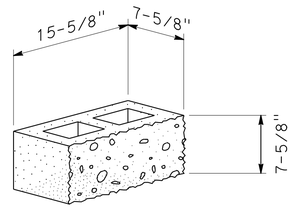

'B' BLOCK
SPLIT FACE ONE SIDE
8 X 8 X 16 NOMINAL

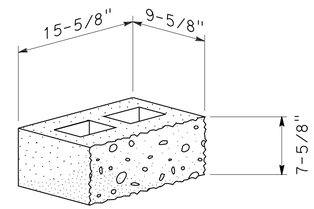

'C' BLOCK
SPLIT FACE ONE SIDE
10 X 8 X 16 NOMINAL

NOTE: (THIS SHEET ONLY)

THIS PLAN APPROVED FOR AESTHETICS ONLY.

BLOCK DETAILS

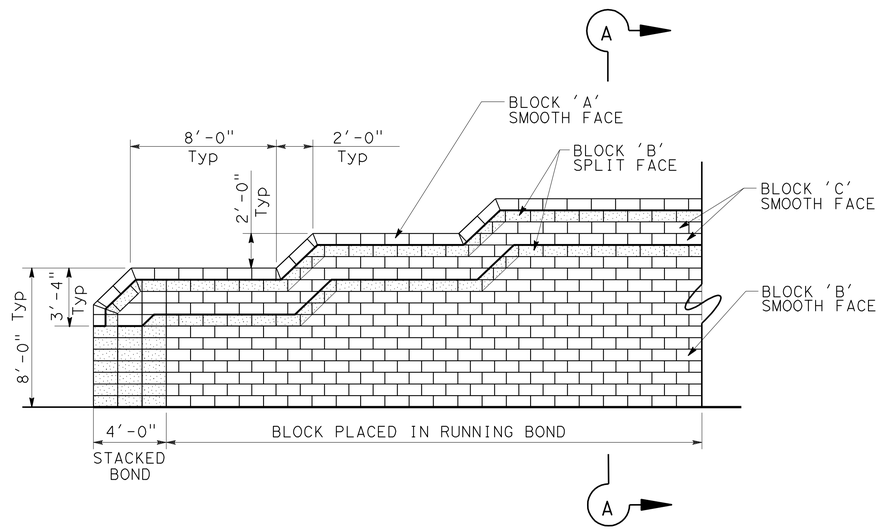

ELEVATION- TYPICAL SOUNDWALL END TREATMENT CITY / RESIDENTIAL SIDE

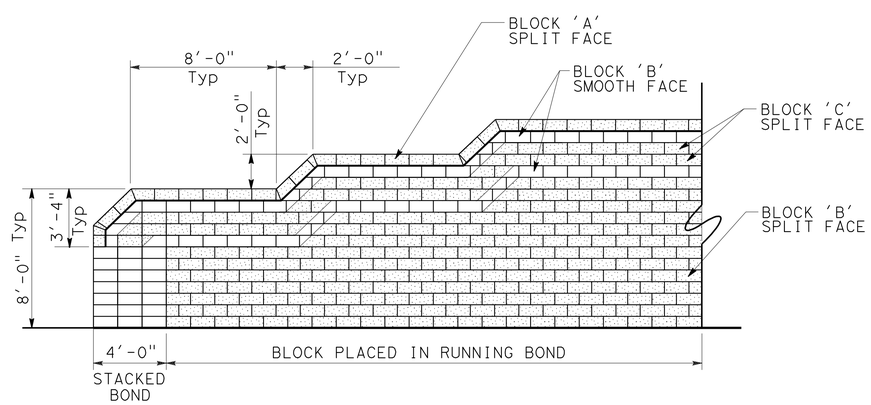

ELEVATION- TYPICAL SOUNDWALL END TREATMENT FREEWAY SIDE

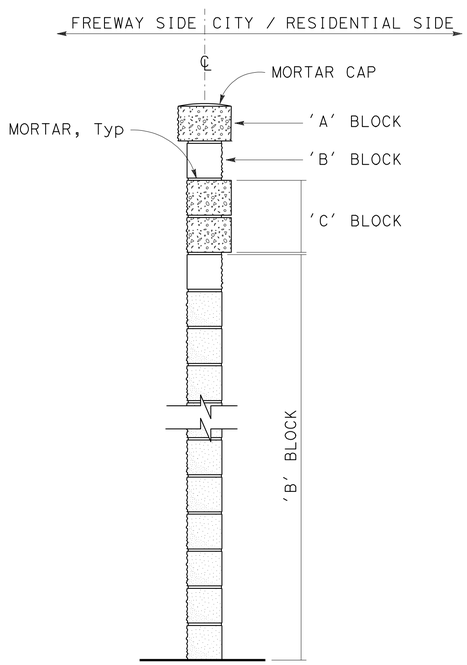

SECTION A-A

APPROVED FOR SOUND WALL WORK ONLY

SOUND WALL DETAILS
(SOUND WALL No. 1)

NO SCALE

SW-2

STATE OF CALIFORNIA - DEPARTMENT OF TRANSPORTATION
Caltrans® LANDSCAPE ARCHITECTURE

SENIOR LANDSCAPE ARCHITECT: BRAD COLE
CALCULATED-DESIGNED BY: GUS ESCUTIA
CHECKED BY: BILL DUTTERA
REVISED BY: GE
DATE REVISED: 01/20/10

LAST REVISION DATE PLOTTED => 29-MAR-2012
TIME PLOTTED => 17:37

Dist	COUNTY	ROUTE	POST MILES TOTAL PROJECT	SHEET No.	TOTAL SHEETS
10	SJ	4,99	R19.5/R20.1, 15.0/18.6	806	1414

Sean Pledger 12-05-11
REGISTERED CIVIL ENGINEER DATE

3-26-12
PLANS APPROVAL DATE

REGISTERED PROFESSIONAL ENGINEER
SEAN M. PLEDGER
No. 56328
Exp. 12-31-12
CIVIL
STATE OF CALIFORNIA

THE STATE OF CALIFORNIA OR ITS OFFICERS OR AGENTS SHALL NOT BE RESPONSIBLE FOR THE ACCURACY OR COMPLETENESS OF SCANNED COPIES OF THIS PLAN SHEET.

SOUND WALL No. 1 QUANTITIES

LOCATION	SOUND WALL (MASONRY BLOCK)	CONCRETE BARRIER (TYPE 736SV)	16" CIDH CONCRETE PILING (BARRIER)
	SQFT	LF	LF
SW No. 1 "SW1" Sta 330+00.00 TO "SW1" Sta 336+10.00	5693.1	610.0	1616.0

APPROVED FOR SOUND WALL WORK ONLY

SOUND WALL PLAN
(SOUND WALL No. 1)
NO SCALE

SW-3

REVISED BY
DATE REVISED

LOREN E VINSON
SEAN PLEDGER

CALCULATED-DESIGNED BY
CHECKED BY

FUNCTIONAL SUPERVISOR
MARTIN NISHIKAWA

STATE OF CALIFORNIA - DEPARTMENT OF TRANSPORTATION
Caltrans
06-DESIGN

LAST REVISION 05-26-11
DATE PLOTTED => 29-MAR-2012
TIME PLOTTED => 17:07

Dist	COUNTY	ROUTE	POST MILES TOTAL PROJECT	SHEET No.	TOTAL SHEETS
10	SJ	4,99	R19.5/R20.1, 15.0/18.6	807	1414

REGISTERED CIVIL ENGINEER 12-05-11 DATE

3-26-12
PLANS APPROVAL DATE

REGISTERED PROFESSIONAL ENGINEER SEAN M. PLEDGER No. 56328 Exp. 12-31-12 CIVIL STATE OF CALIFORNIA

THE STATE OF CALIFORNIA OR ITS OFFICERS OR AGENTS SHALL NOT BE RESPONSIBLE FOR THE ACCURACY OR COMPLETENESS OF SCANNED COPIES OF THIS PLAN SHEET.

NOTES: (THIS SHEET ONLY)

1. FOR ACCURATE RIGHT OF WAY DATA, CONTACT RIGHT OF WAY ENGINEERING AT THE DISTRICT OFFICE.
2. FOR SOUND WALL DETAILS, SEE SHEET SW-2.

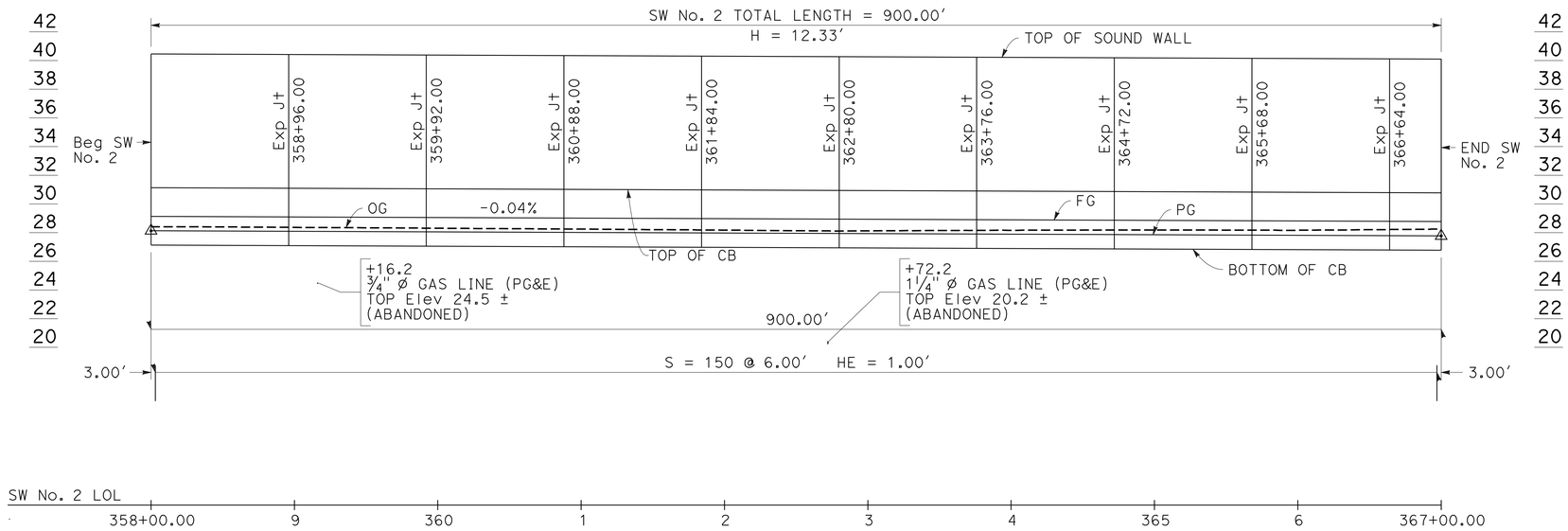

ELEVATION

SCALE: Horiz 1"=50'
Vert 1"=5'

SOUND WALL No. 2 ELEVATIONS

"SW2" LOL	PG	FG	TOP OF BARRIER	TOP OF WALL
VPI 358+00.00	28.13	29.13	31.13	40.46
358+50.00	28.11	29.11	31.11	40.44
359+00.00	28.09	29.09	31.09	40.42
359+50.00	28.07	29.07	31.07	40.40
360+00.00	28.05	29.05	31.05	40.38
360+50.00	28.03	29.03	31.03	40.36
361+00.00	28.01	29.01	31.01	40.34
361+50.00	27.99	28.99	30.99	40.32
362+00.00	27.97	28.97	30.97	40.30
362+50.00	27.95	28.95	30.95	40.28
363+00.00	27.93	28.93	30.93	40.26
363+50.00	27.91	28.91	30.91	40.24
364+00.00	27.89	28.89	30.89	40.22
364+50.00	27.87	28.87	30.87	40.20
365+00.00	27.85	28.85	30.85	40.18
365+50.00	27.83	28.83	30.83	40.16
366+00.00	27.81	28.81	30.81	40.14
366+50.00	27.79	28.77	30.79	40.12
VPI 367+00.00	27.77	28.77	30.77	40.10

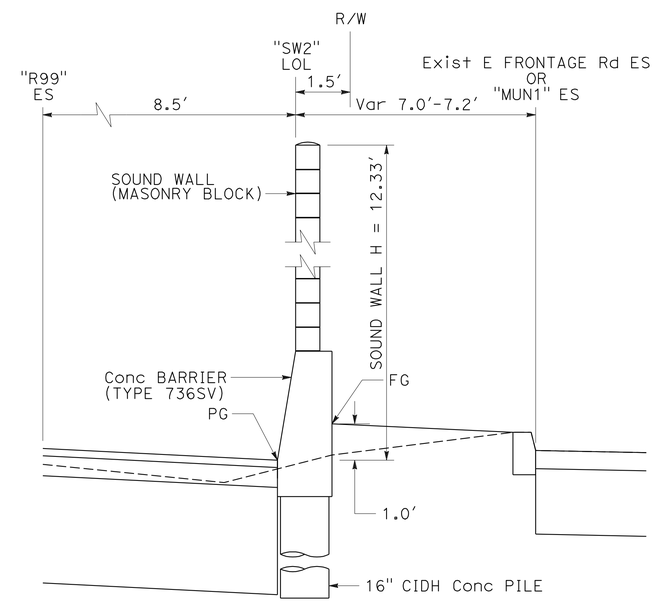

TYPICAL CROSS SECTION

"SW2" Sta 358+00.00 TO "SW2" Sta 367+00.00

NO SCALE

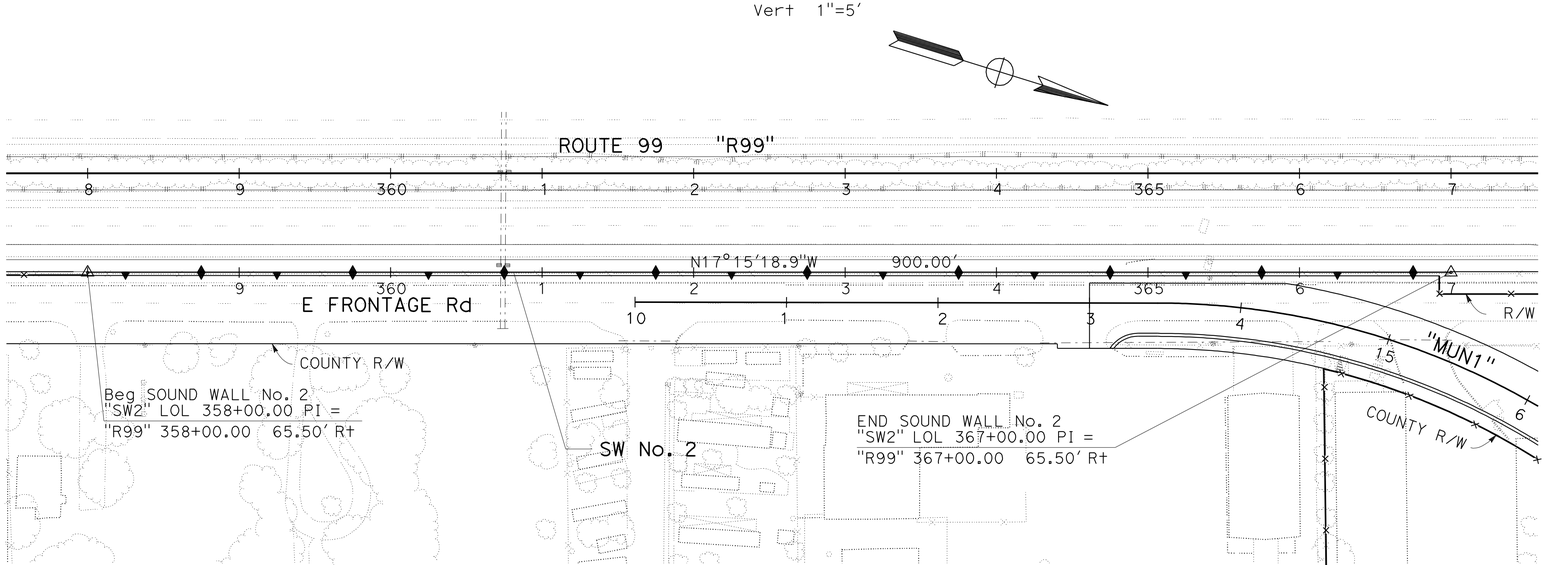

PLAN

SCALE: 1"=50'

SOUND WALL PLAN (SOUND WALL No. 2)

SCALE AS SHOWN

SW-4

APPROVED FOR SOUND WALL WORK ONLY

STATE OF CALIFORNIA - DEPARTMENT OF TRANSPORTATION
Caltrans 06-DESIGN

FUNCTIONAL SUPERVISOR: MARTIN NISHIKAWA
CALCULATED-DESIGNED BY: LOREN E VINSON
CHECKED BY: SEAN PLEDGER
REVISED BY / DATE REVISED

LAST REVISION 05-26-11 | DATE PLOTTED => 29-MAR-2012 | TIME PLOTTED => 17:07

Dist	COUNTY	ROUTE	POST MILES TOTAL PROJECT	SHEET No.	TOTAL SHEETS
10	SJ	4,99	R19.5/R20.1, 15.0/18.6	808	1414

Sean Pledger 12-05-11
REGISTERED CIVIL ENGINEER DATE

3-26-12
PLANS APPROVAL DATE

REGISTERED PROFESSIONAL ENGINEER
SEAN M. PLEDGER
No. 56328
Exp. 12-31-12
CIVIL
STATE OF CALIFORNIA

THE STATE OF CALIFORNIA OR ITS OFFICERS OR AGENTS SHALL NOT BE RESPONSIBLE FOR THE ACCURACY OR COMPLETENESS OF SCANNED COPIES OF THIS PLAN SHEET.

SOUND WALL No. 2 QUANTITIES

LOCATION	SOUND WALL (MASONRY BLOCK)	CONCRETE BARRIER (TYPE 736SV)	16" CIDH CONCRETE PILING (BARRIER)
	SQFT	LF	LF
SW No. 2 "SW2" Sta 358+00.00 TO "SW2" Sta 367+00.00	8399.7	900.0	2400.0

APPROVED FOR SOUND WALL WORK ONLY

SOUND WALL PLAN
(SOUND WALL No. 2)
NO SCALE

SW-5

REVISED BY
DATE REVISED

LOREN E VINSON
SEAN PLEDGER

CALCULATED-DESIGNED BY
CHECKED BY

FUNCTIONAL SUPERVISOR
MARTIN NISHIKAWA

STATE OF CALIFORNIA - DEPARTMENT OF TRANSPORTATION
Caltrans
06-DESIGN

LAST REVISION 05-26-11
DATE PLOTTED => 29-MAR-2012
TIME PLOTTED => 17:07

Dist	COUNTY	ROUTE	POST MILES TOTAL PROJECT	SHEET No.	TOTAL SHEETS
10	SJ	4,99	R19.5/R20.1, 15.0/18.6	809	1414

Sean Pledger 12-05-11
REGISTERED CIVIL ENGINEER DATE

3-26-12
PLANS APPROVAL DATE

REGISTERED PROFESSIONAL ENGINEER SEAN M. PLEDGER No. 56328 Exp. 12-31-12 CIVIL STATE OF CALIFORNIA

THE STATE OF CALIFORNIA OR ITS OFFICERS OR AGENTS SHALL NOT BE RESPONSIBLE FOR THE ACCURACY OR COMPLETENESS OF SCANNED COPIES OF THIS PLAN SHEET.

NOTES: (THIS SHEET ONLY)

1. FOR ACCURATE RIGHT OF WAY DATA, CONTACT RIGHT OF WAY ENGINEERING AT THE DISTRICT OFFICE.
2. FOR SOUND WALL DETAILS, SEE SHEET SW-2.

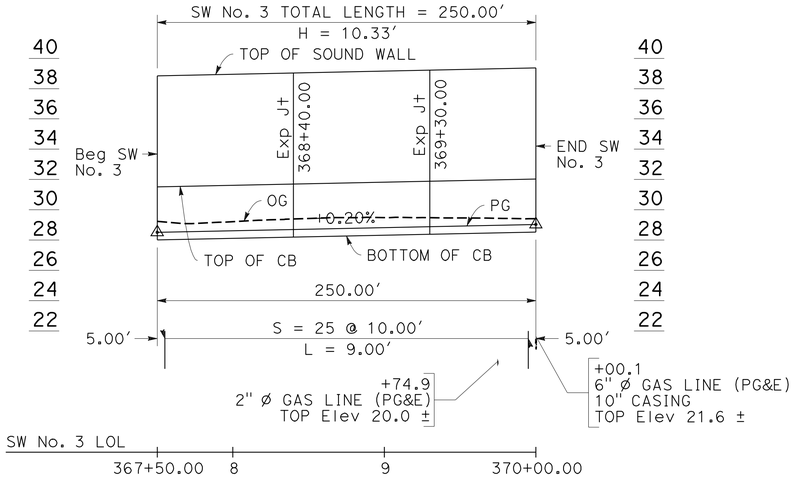

ELEVATION

SCALE: Horiz 1"=50'
Vert 1"=5'

SOUND WALL
No. 3 ELEVATIONS

"SW3" LOL	PG	TOP OF BARRIER	TOP OF WALL
VPI 367+50.00	28.52	31.52	38.85
368+00.00	28.62	31.62	38.95
368+50.00	28.72	31.72	39.06
369+00.00	28.83	31.83	39.16
369+50.00	28.93	31.93	39.26
VPI 370+00.00	29.03	32.03	39.37

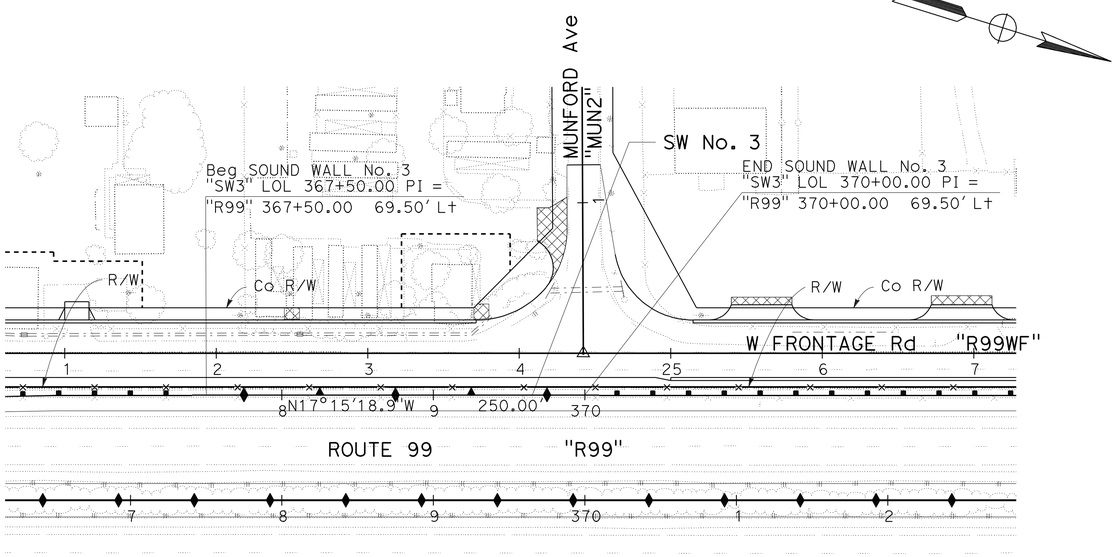

PLAN

SCALE: 1"=50'

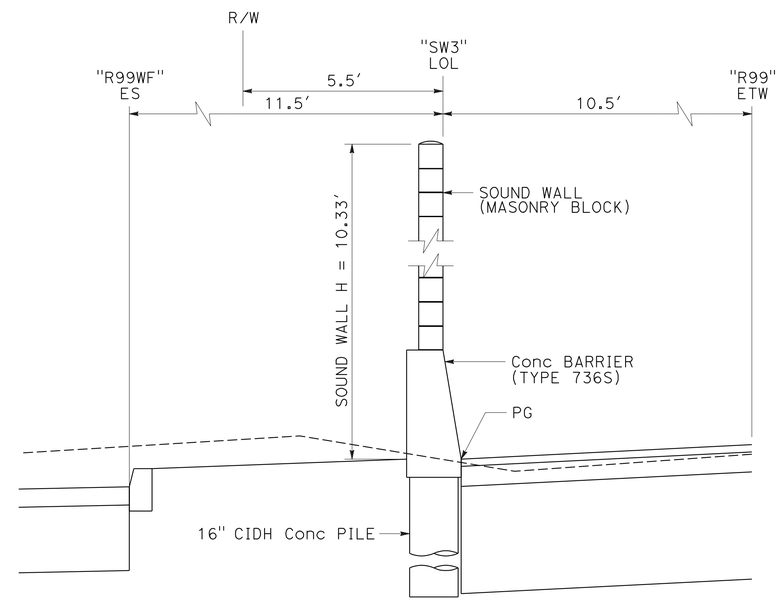

TYPICAL CROSS SECTION

"SW3" Sta 367+50.00 TO "SW3" Sta 370+00.00

NO SCALE

SOUND WALL PLAN
(SOUND WALL No. 3)

SCALE AS SHOWN

SW-6

APPROVED FOR SOUND WALL WORK ONLY

STATE OF CALIFORNIA - DEPARTMENT OF TRANSPORTATION
Caltrans
06-DESIGN
FUNCTIONAL SUPERVISOR: MARTIN NISHIKAWA
CALCULATED-DESIGNED BY: LOREN E VINSON
CHECKED BY: SEAN PLEDGER
REVISED BY
DATE REVISED

LAST REVISION 05-26-11
DATE PLOTTED => 29-MAR-2012
TIME PLOTTED => 17:07

Dist	COUNTY	ROUTE	POST MILES TOTAL PROJECT	SHEET No.	TOTAL SHEETS
10	SJ	4,99	R19.5/R20.1, 15.0/18.6	810	1414

Sean Pledger 12-05-11
REGISTERED CIVIL ENGINEER DATE

3-26-12
PLANS APPROVAL DATE

REGISTERED PROFESSIONAL ENGINEER
SEAN M. PLEDGER
No. 56328
Exp. 12-31-12
CIVIL
STATE OF CALIFORNIA

THE STATE OF CALIFORNIA OR ITS OFFICERS OR AGENTS SHALL NOT BE RESPONSIBLE FOR THE ACCURACY OR COMPLETENESS OF SCANNED COPIES OF THIS PLAN SHEET.

SOUND WALL No. 3 QUANTITIES

LOCATION	SOUND WALL (MASONRY BLOCK)	CONCRETE BARRIER (TYPE 736S)	16" CIDH CONCRETE PILING (BARRIER)
	SQFT	LF	LF
SW No. 3 "SW3" Sta 367+50.00 TO "SW3" Sta 370+00.00	1833.2	250.0	225.0

APPROVED FOR SOUND WALL WORK ONLY

SOUND WALL PLAN
(SOUND WALL No. 3)
NO SCALE

SW-7

STATE OF CALIFORNIA - DEPARTMENT OF TRANSPORTATION
Caltrans
06-DESIGN

FUNCTIONAL SUPERVISOR: MARTIN NISHIKAWA
CALCULATED-DESIGNED BY: LOREN E VINSON
CHECKED BY: SEAN PLEDGER
REVISED BY
DATE REVISED

LAST REVISION 05-26-11
DATE PLOTTED => 29-MAR-2012
TIME PLOTTED => 17:07

Dist	COUNTY	ROUTE	POST MILES TOTAL PROJECT	SHEET No.	TOTAL SHEETS
10	SJ	4,99	R19.5/R20.1, 15.0/18.6	811	1414

REGISTERED CIVIL ENGINEER 12-05-11 DATE

3-26-12
PLANS APPROVAL DATE

REGISTERED PROFESSIONAL ENGINEER SEAN M. PLEDGER No. 56328 Exp. 12-31-12 CIVIL STATE OF CALIFORNIA

THE STATE OF CALIFORNIA OR ITS OFFICERS OR AGENTS SHALL NOT BE RESPONSIBLE FOR THE ACCURACY OR COMPLETENESS OF SCANNED COPIES OF THIS PLAN SHEET.

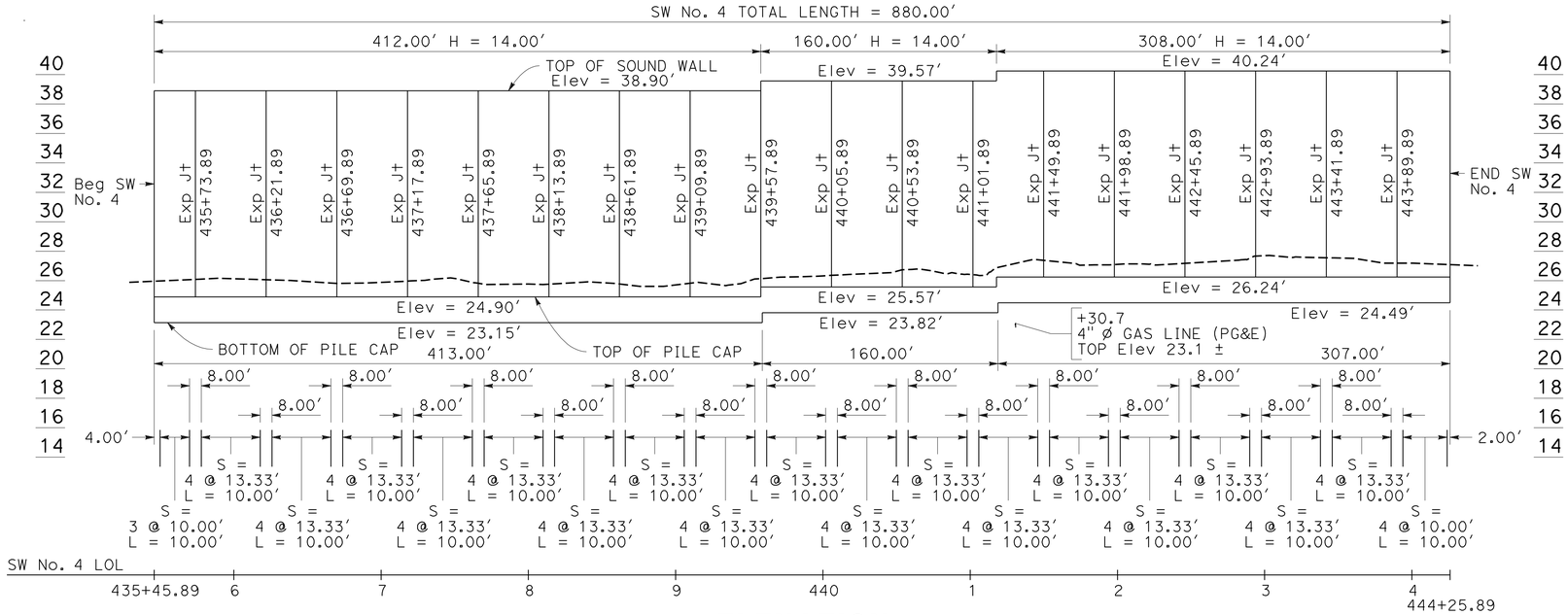

ELEVATION

SCALE: Horiz 1"=50'
Vert 1"=5'

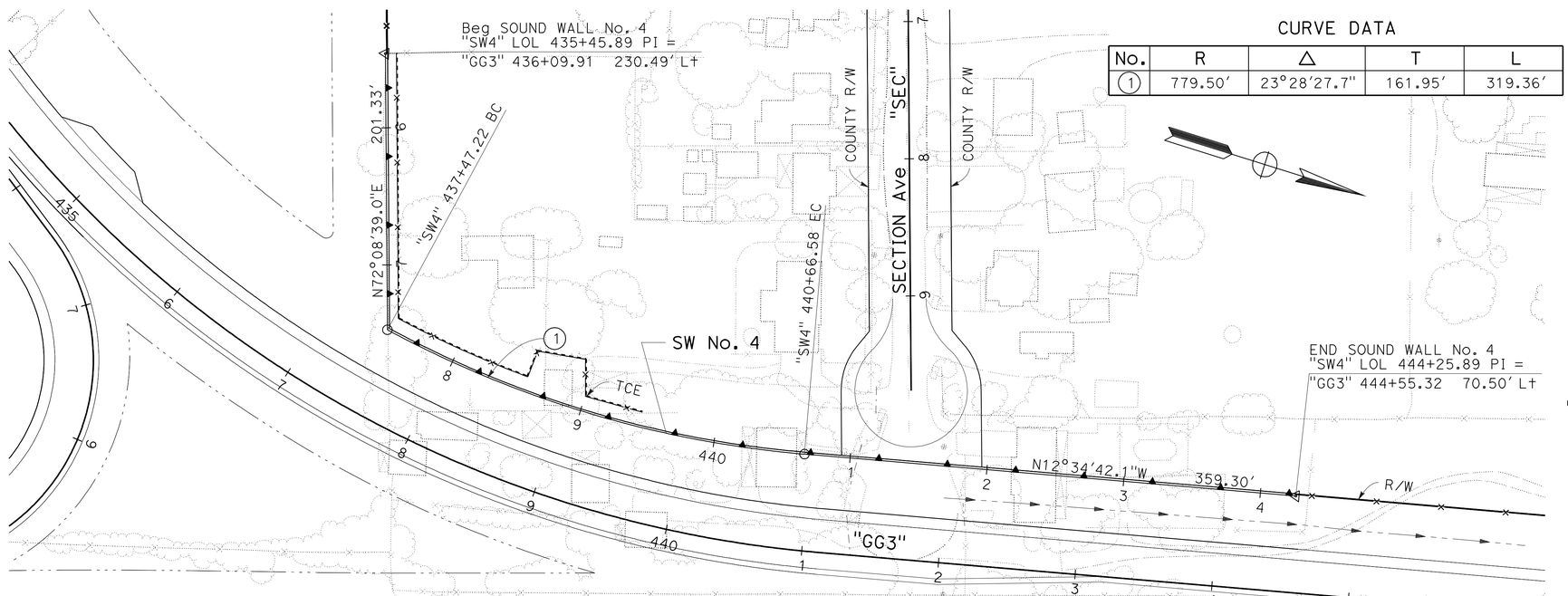

CURVE DATA

No.	R	Δ	T	L
1	779.50'	23°28'27.7"	161.95'	319.36'

PLAN

SCALE: 1"=50'

NOTES: (THIS SHEET ONLY)

1. FOR ACCURATE RIGHT OF WAY DATA, CONTACT RIGHT OF WAY ENGINEERING AT THE DISTRICT OFFICE.
2. FOR SOUND WALL DETAILS, SEE SHEET SW-2.

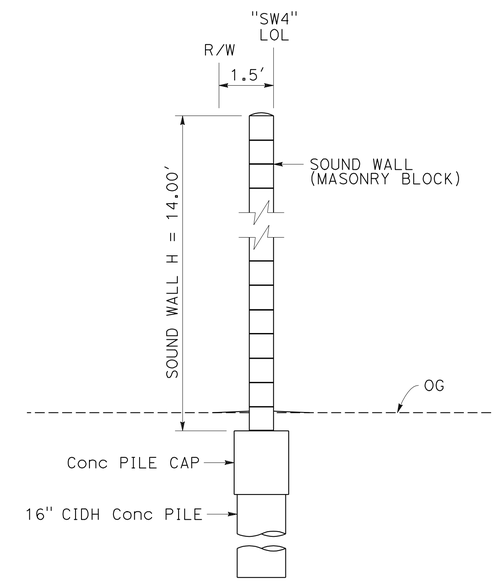

TYPICAL CROSS SECTION

"SW4" Sta 435+45.89 TO "SW4" Sta 444+25.89

NO SCALE

APPROVED FOR SOUND WALL WORK ONLY

SOUND WALL PLAN
(SOUND WALL No. 4)

SCALE AS SHOWN **SW-8**

STATE OF CALIFORNIA - DEPARTMENT OF TRANSPORTATION
Caltrans
06-DESIGN
FUNCTIONAL SUPERVISOR: MARTIN NISHIKAWA
CALCULATED-DESIGNED BY: LOREN E VINSON
CHECKED BY: SEAN PLEDGER
REVISED BY
DATE REVISED

LAST REVISION 05-26-11 DATE PLOTTED => 30-MAY-2012 TIME PLOTTED => 14:09

Dist	COUNTY	ROUTE	POST MILES TOTAL PROJECT	SHEET No.	TOTAL SHEETS
10	SJ	4,99	R19.5/R20.1, 15.0/18.6	812	1414

Sean Pledger 12-05-11
REGISTERED CIVIL ENGINEER DATE

3-26-12
PLANS APPROVAL DATE

REGISTERED PROFESSIONAL ENGINEER
SEAN M. PLEDGER
No. 56328
Exp. 12-31-12
CIVIL
STATE OF CALIFORNIA

THE STATE OF CALIFORNIA OR ITS OFFICERS OR AGENTS SHALL NOT BE RESPONSIBLE FOR THE ACCURACY OR COMPLETENESS OF SCANNED COPIES OF THIS PLAN SHEET.

SOUND WALL No. 4 QUANTITIES

LOCATION	SOUND WALL (MASONRY BLOCK)	16" CIDH CONCRETE PILING	STRUCTURAL CONCRETE (SOUND WALL)
	SQFT	LF	CY
SW No. 4 "SW4" Sta 435+45.89 TO "SW4" Sta 444+25.89	12,320.0	750.0	85.6

SOUND WALL PLAN
(SOUND WALL No. 4)
NO SCALE

APPROVED FOR SOUND WALL WORK ONLY

SW-9

STATE OF CALIFORNIA - DEPARTMENT OF TRANSPORTATION
Caltrans
06-DESIGN

FUNCTIONAL SUPERVISOR: MARTIN NISHIKAWA
CALCULATED-DESIGNED BY: LOREN E VINSON
CHECKED BY: SEAN PLEDGER
REVISED BY
DATE REVISED

LAST REVISION 05-26-11
DATE PLOTTED => 29-MAR-2012
TIME PLOTTED => 17:32

Dist	COUNTY	ROUTE	POST MILES TOTAL PROJECT	SHEET No.	TOTAL SHEETS
10	SJ	4,99	R19.5/R20.1, 15.0/18.6	813	1414

Sean Pledger 12-05-11
REGISTERED CIVIL ENGINEER DATE

3-26-12
PLANS APPROVAL DATE

REGISTERED PROFESSIONAL ENGINEER SEAN M. PLEDGER No. 56328 Exp. 12-31-12 CIVIL STATE OF CALIFORNIA

THE STATE OF CALIFORNIA OR ITS OFFICERS OR AGENTS SHALL NOT BE RESPONSIBLE FOR THE ACCURACY OR COMPLETENESS OF SCANNED COPIES OF THIS PLAN SHEET.

NOTES: (THIS SHEET ONLY)

1. FOR ACCURATE RIGHT OF WAY DATA, CONTACT RIGHT OF WAY ENGINEERING AT THE DISTRICT OFFICE.
2. FOR SOUND WALL DETAILS, SEE SHEET SW-2.

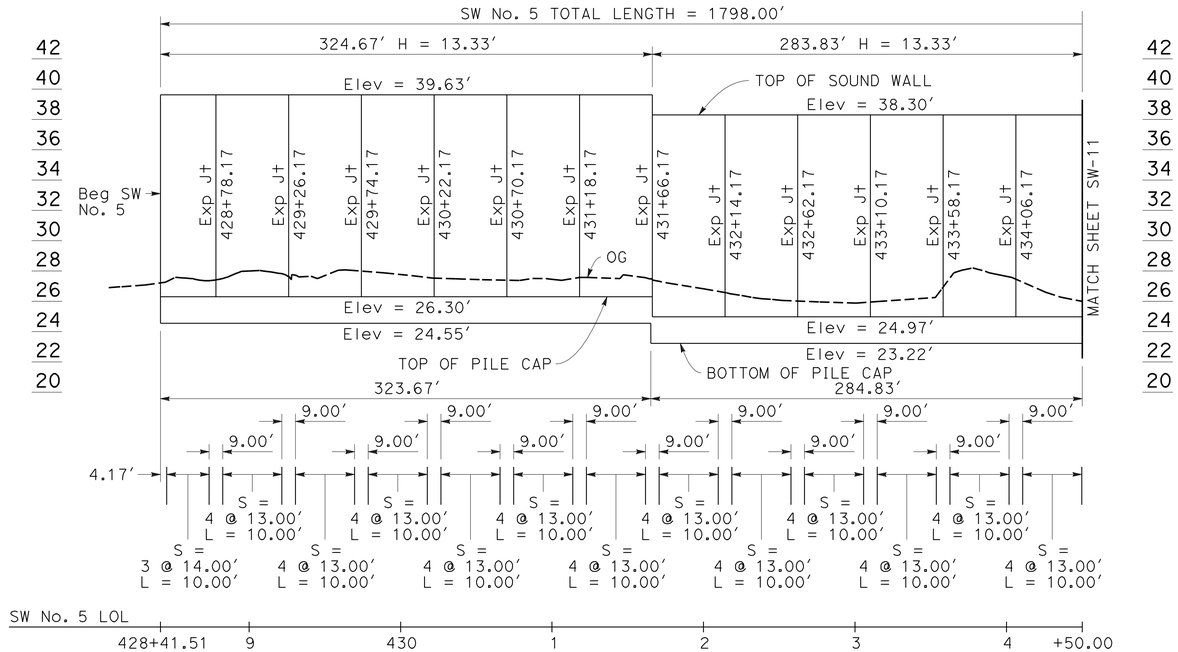

ELEVATION

SCALE: Horiz 1"=50'
Vert 1"=5'

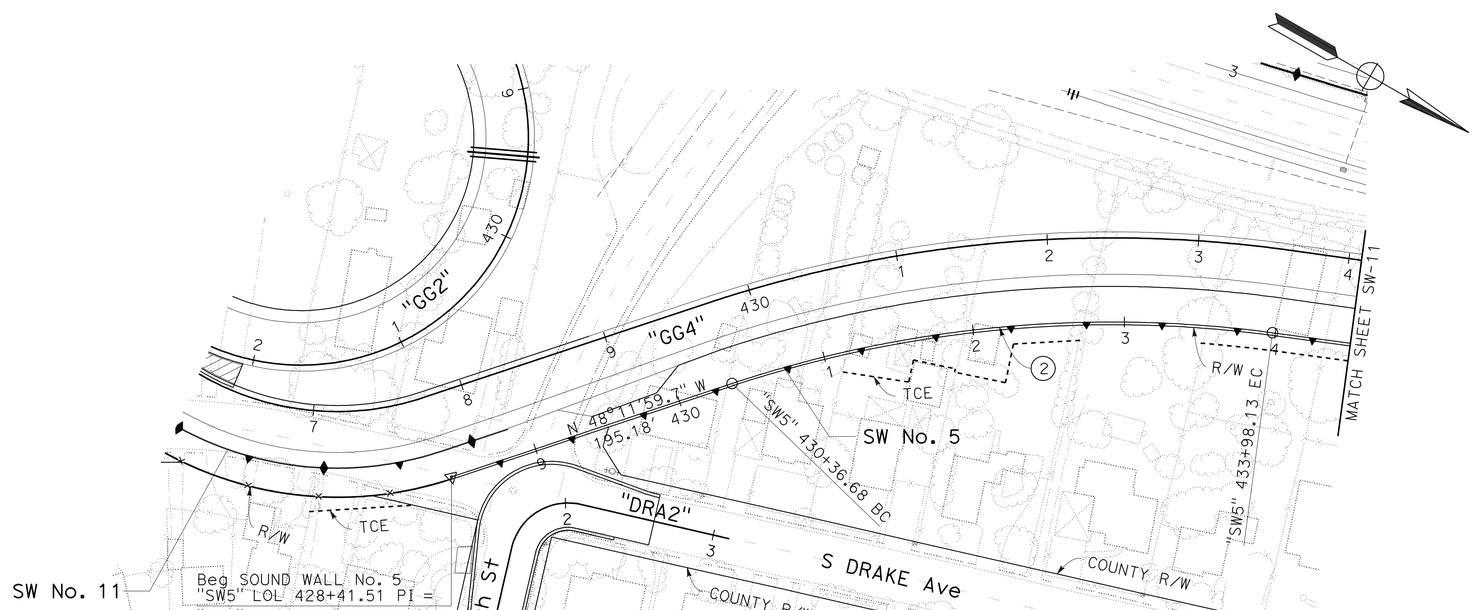

PLAN

SCALE: 1"=50'

CURVE DATA

No.	R	Δ	T	L
2	794.50'	26°03'55.8"	183.90'	361.44'

APPROVED FOR SOUND WALL WORK ONLY

SOUND WALL PLAN
(SOUND WALL No. 5)

SCALE AS SHOWN

SW-10

STATE OF CALIFORNIA - DEPARTMENT OF TRANSPORTATION
Caltrans 06-DESIGN

FUNCTIONAL SUPERVISOR: MARTIN NISHIKAWA
CALCULATED-DESIGNED BY: LOREN E VINSON
CHECKED BY: SEAN PLEDGER
REVISED BY / DATE REVISED

LAST REVISION 05-26-11
DATE PLOTTED => 29-MAR-2012
TIME PLOTTED => 17:32

Dist	COUNTY	ROUTE	POST MILES TOTAL PROJECT	SHEET No.	TOTAL SHEETS
10	SJ	4,99	R19.5/R20.1, 15.0/18.6	814	1414

REGISTERED CIVIL ENGINEER 12-05-11 DATE

3-26-12
PLANS APPROVAL DATE

REGISTERED PROFESSIONAL ENGINEER SEAN M. PLEDGER No. 56328 Exp. 12-31-12 CIVIL STATE OF CALIFORNIA

THE STATE OF CALIFORNIA OR ITS OFFICERS OR AGENTS SHALL NOT BE RESPONSIBLE FOR THE ACCURACY OR COMPLETENESS OF SCANNED COPIES OF THIS PLAN SHEET.

SOUND WALL No. 5 ELEVATIONS

NOTES: (THIS SHEET ONLY)

1. FOR ACCURATE RIGHT OF WAY DATA, CONTACT RIGHT OF WAY ENGINEERING AT THE DISTRICT OFFICE.
2. FOR SOUND WALL DETAILS, SEE SHEET SW-2.

"SW5" LOL	PG	FG	TOP OF BARRIER	TOP OF WALL
VPI 437+90.17	25.97	25.97	28.97	38.97
438+00.00	26.80	26.14	29.80	39.80
VPI 438+34.84	29.72	26.41	32.72	42.72
438+50.00	29.67	26.44	32.67	42.67
438+57.19	29.65	26.45	32.65	42.65
439+00.00	29.51	26.45	32.51	42.51

"SW5" LOL	PG	FG	TOP OF BARRIER	TOP OF WALL
439+50.00	29.35	26.54	32.35	42.35
440+00.00	29.19	26.63	32.19	42.19
440+22.84	29.12	26.71	32.12	42.12
440+50.00	29.03	26.80	32.03	42.03
VPI 441+00.00	28.87	26.98	31.87	41.87

"SW5" LOL	PG	FG	TOP OF BARRIER	TOP OF WALL
441+50.00	28.84	27.15	31.84	41.84
442+00.00	28.81	27.37	31.81	41.81
VPI 442+22.84	28.80	27.55	31.80	41.80
442+50.00	27.41	27.48	30.41	40.41
VPI 442+90.17	25.36	26.19	28.36	38.36

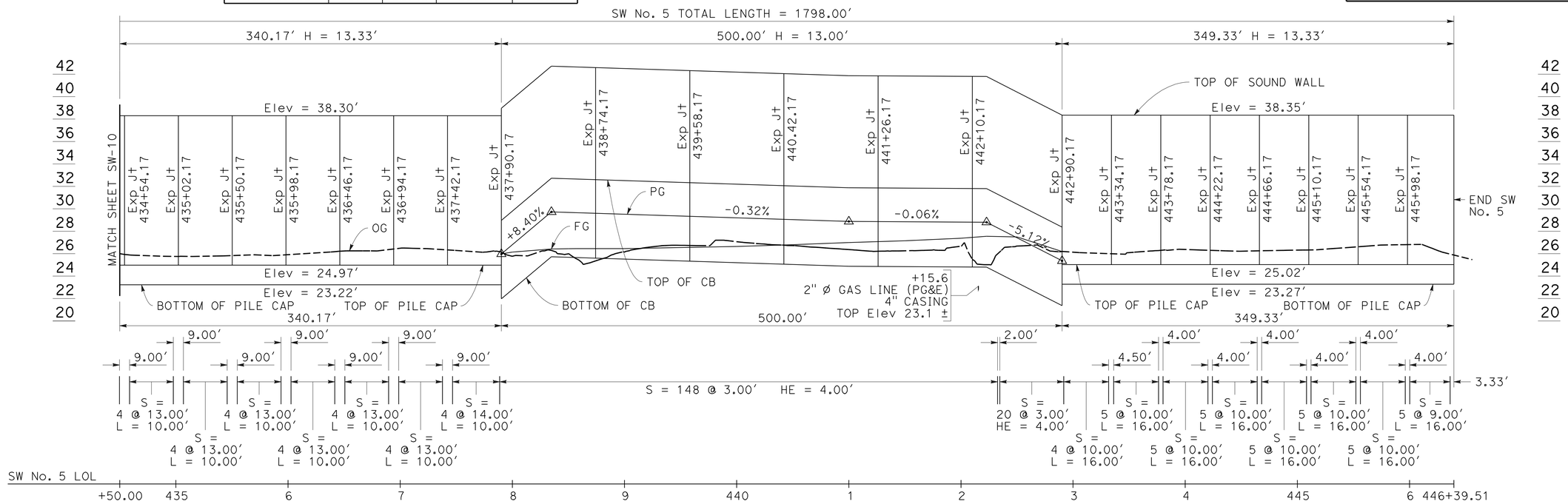

ELEVATION

SCALE: Horiz 1"=50'
Vert 1"=5'

CURVE DATA

No.	R	Δ	T	L
3	2988.50'	3°10'33.3"	82.85'	165.65'

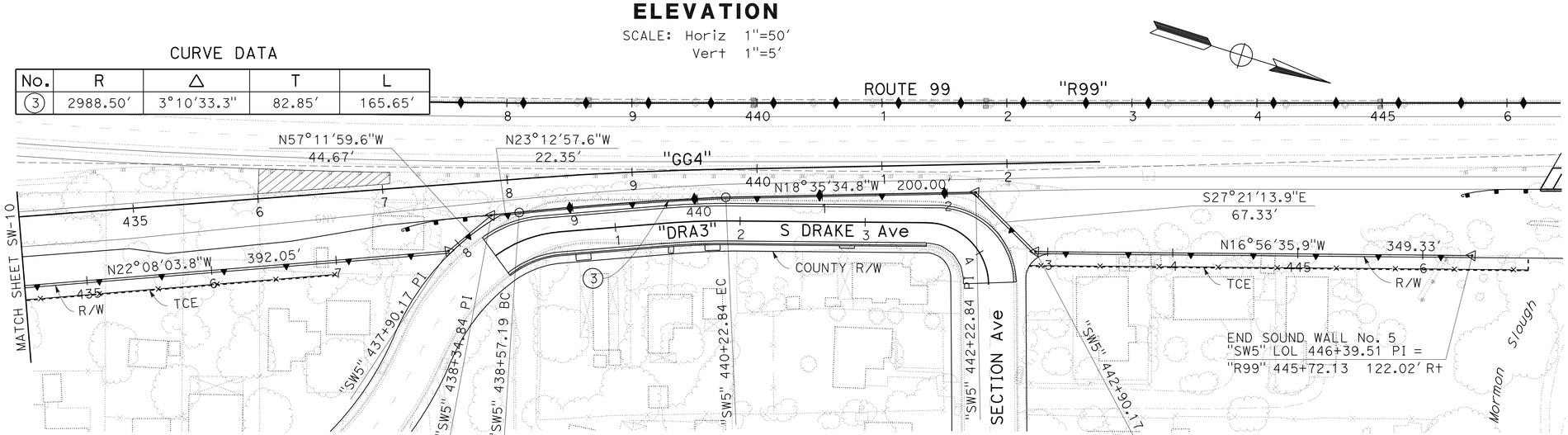

PLAN

SCALE: 1"=50'

APPROVED FOR SOUND WALL WORK ONLY

SOUND WALL PLAN
(SOUND WALL No. 5)

SCALE AS SHOWN

SW-11

REVISED BY | DATE REVISED
LOREN E VINSON | SEAN PLEDGER
CALCULATED-DESIGNED BY | CHECKED BY
FUNCTIONAL SUPERVISOR | MARTIN NISHIKAWA

STATE OF CALIFORNIA - DEPARTMENT OF TRANSPORTATION
Caltrans
06-DESIGN

LAST REVISION 05-26-11 | DATE PLOTTED => 29-MAR-2012 | TIME PLOTTED => 17:32

Dist	COUNTY	ROUTE	POST MILES TOTAL PROJECT	SHEET No.	TOTAL SHEETS
10	SJ	4,99	R19.5/R20.1, 15.0/18.6	815	1414

REGISTERED CIVIL ENGINEER 12-05-11 DATE

3-26-12
PLANS APPROVAL DATE

REGISTERED PROFESSIONAL ENGINEER SEAN M. PLEDGER No. 56328 Exp. 12-31-12 CIVIL STATE OF CALIFORNIA

THE STATE OF CALIFORNIA OR ITS OFFICERS OR AGENTS SHALL NOT BE RESPONSIBLE FOR THE ACCURACY OR COMPLETENESS OF SCANNED COPIES OF THIS PLAN SHEET.

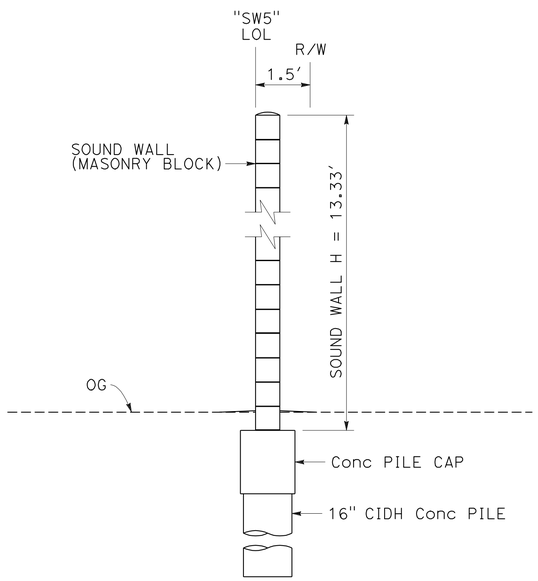

"SW5" Sta 428+41.51 TO "SW5" Sta 437+90.17

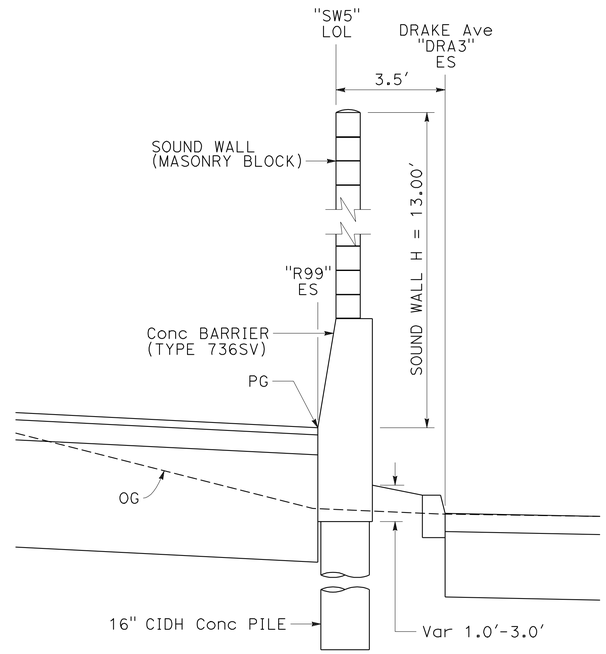

"SW5" Sta 437+90.17 TO "SW5" Sta 442+90.17

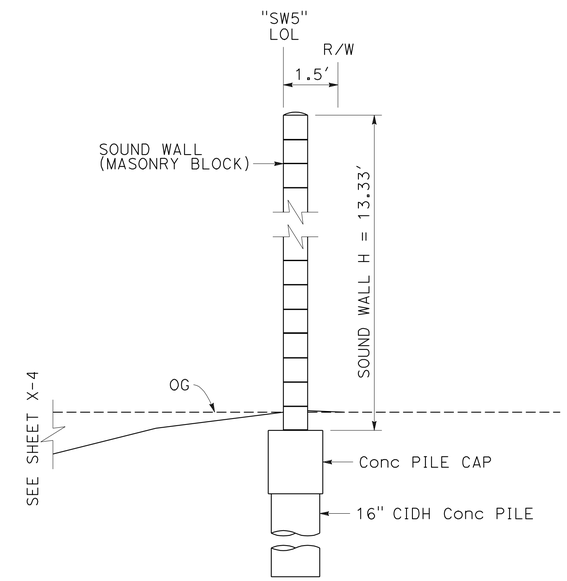

"SW5" Sta 442+90.17 TO "SW5" Sta 446+39.51

TYPICAL CROSS SECTION

APPROVED FOR SOUND WALL WORK ONLY

SOUND WALL PLAN
(SOUND WALL No. 5)
NO SCALE

SW-12

STATE OF CALIFORNIA - DEPARTMENT OF TRANSPORTATION
Caltrans
06-DESIGN

FUNCTIONAL SUPERVISOR: MARTIN NISHIKAWA
CALCULATED-DESIGNED BY: LOREN E VINSON
CHECKED BY: SEAN PLEDGER
REVISED BY
DATE REVISED

LAST REVISION 05-26-11
DATE PLOTTED => 29-MAR-2012
TIME PLOTTED => 17:32

Dist	COUNTY	ROUTE	POST MILES TOTAL PROJECT	SHEET No.	TOTAL SHEETS
10	SJ	4,99	R19.5/R20.1, 15.0/18.6	816	1414

Sean Pledger 12-05-11
REGISTERED CIVIL ENGINEER DATE

3-26-12
PLANS APPROVAL DATE

REGISTERED PROFESSIONAL ENGINEER
SEAN M. PLEDGER
No. 56328
Exp. 12-31-12
CIVIL
STATE OF CALIFORNIA

THE STATE OF CALIFORNIA OR ITS OFFICERS OR AGENTS SHALL NOT BE RESPONSIBLE FOR THE ACCURACY OR COMPLETENESS OF SCANNED COPIES OF THIS PLAN SHEET.

SOUND WALL No. 5 QUANTITIES

LOCATION	SOUND WALL (MASONRY BLOCK)	CONCRETE BARRIER (TYPE 736SV)	16" CIDH CONCRETE PILING	16" CIDH CONCRETE PILING (BARRIER)	STRUCTURAL CONCRETE (SOUND WALL)
	SQFT	LF	LF	LF	CY
SW No. 5 "SW5" Sta 428+41.51 TO "SW5" Sta 437+90.17	12,645.6		790.0		92.2
SW No. 5 "SW5" Sta 437+90.17 TO "SW5" Sta 442+90.17	5,000.0	500.0		2730.0	
SW No. 5 "SW5" Sta 442+90.17 TO "SW5" Sta 446+39.51	4,657.6		624.0		34.0
TOTAL	22,303.2	500.0	1414.0	2730.0	126.2

APPROVED FOR SOUND WALL WORK ONLY

SOUND WALL PLAN
(SOUND WALL No. 5)
NO SCALE

SW-13

STATE OF CALIFORNIA - DEPARTMENT OF TRANSPORTATION
Caltrans
06-DESIGN

FUNCTIONAL SUPERVISOR: MARTIN NISHIKAWA
CALCULATED-DESIGNED BY: LOREN E VINSON
CHECKED BY: SEAN PLEDGER
REVISED BY
DATE REVISED

LAST REVISION 05-26-11
DATE PLOTTED => 29-MAR-2012
TIME PLOTTED => 17:32

Dist	COUNTY	ROUTE	POST MILES TOTAL PROJECT	SHEET No.	TOTAL SHEETS
10	SJ	4,99	R19.5/R20.1, 15.0/18.6	817	1414

REGISTERED CIVIL ENGINEER 12-05-11 DATE

3-26-12
PLANS APPROVAL DATE

REGISTERED PROFESSIONAL ENGINEER SEAN M. PLEDGER No. 56328 Exp. 12-31-12 CIVIL STATE OF CALIFORNIA

THE STATE OF CALIFORNIA OR ITS OFFICERS OR AGENTS SHALL NOT BE RESPONSIBLE FOR THE ACCURACY OR COMPLETENESS OF SCANNED COPIES OF THIS PLAN SHEET.

NOTES: (THIS SHEET ONLY)

1. FOR ACCURATE RIGHT OF WAY DATA, CONTACT RIGHT OF WAY ENGINEERING AT THE DISTRICT OFFICE.
2. FOR SOUND WALL DETAILS, SEE SHEET SW-2.

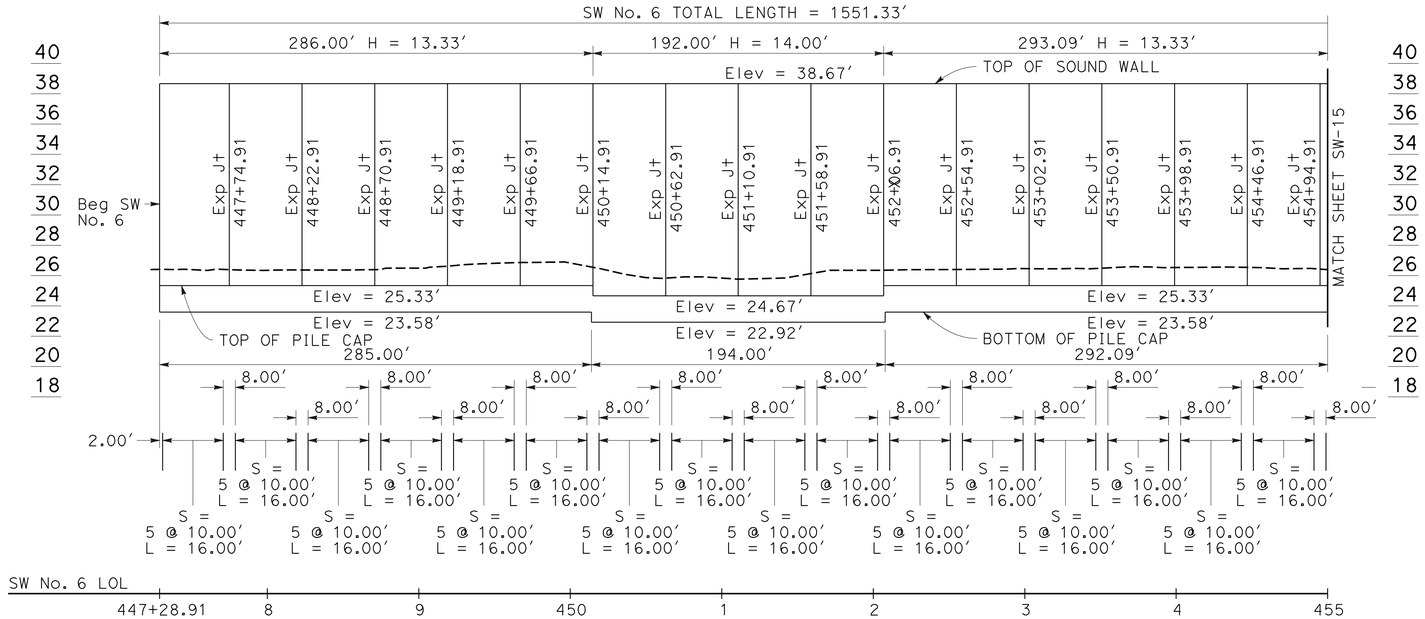

ELEVATION

SCALE: Horiz 1"=50'
Vert 1"=5'

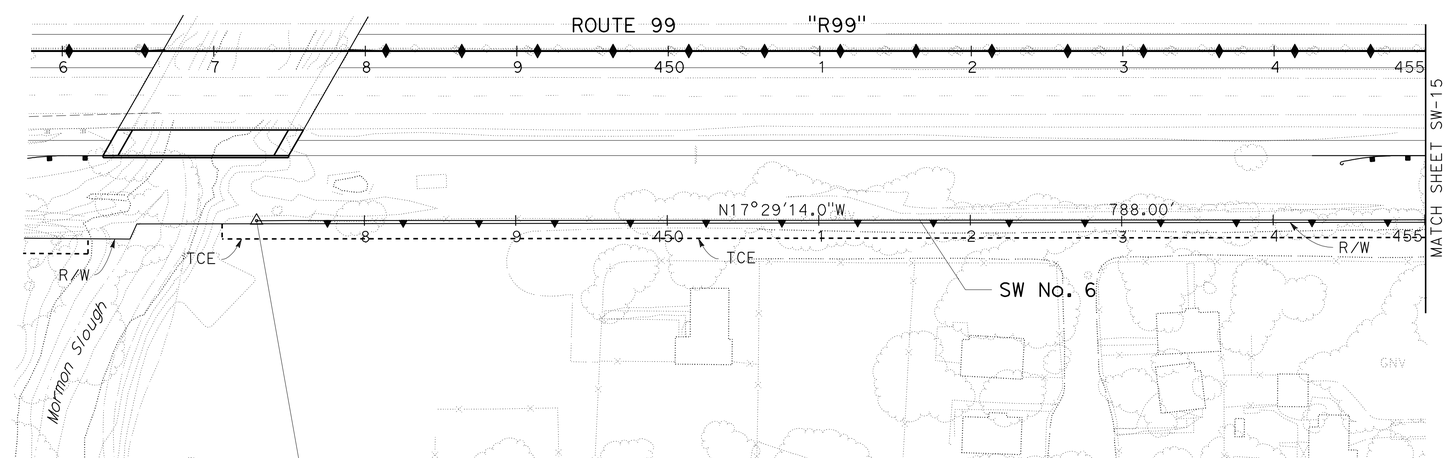

PLAN

SCALE: 1"=50'

APPROVED FOR SOUND WALL WORK ONLY

SOUND WALL PLAN
(SOUND WALL No. 6)

SCALE AS SHOWN

SW-14

STATE OF CALIFORNIA - DEPARTMENT OF TRANSPORTATION
Caltrans
06-DESIGN

FUNCTIONAL SUPERVISOR: MARTIN NISHIKAWA
CALCULATED-DESIGNED BY: LOREN E VINSON
CHECKED BY: SEAN PLEDGER
REVISED BY
DATE REVISED

LAST REVISION 05-26-11
DATE PLOTTED => 29-MAR-2012
TIME PLOTTED => 17:32

Dist	COUNTY	ROUTE	POST MILES TOTAL PROJECT	SHEET No.	TOTAL SHEETS
10	SJ	4,99	R19.5/R20.1, 15.0/18.6	818	1414

REGISTERED CIVIL ENGINEER 12-05-11 DATE

3-26-12
PLANS APPROVAL DATE

REGISTERED PROFESSIONAL ENGINEER SEAN M. PLEDGER No. 56328 Exp. 12-31-12 CIVIL STATE OF CALIFORNIA

THE STATE OF CALIFORNIA OR ITS OFFICERS OR AGENTS SHALL NOT BE RESPONSIBLE FOR THE ACCURACY OR COMPLETENESS OF SCANNED COPIES OF THIS PLAN SHEET.

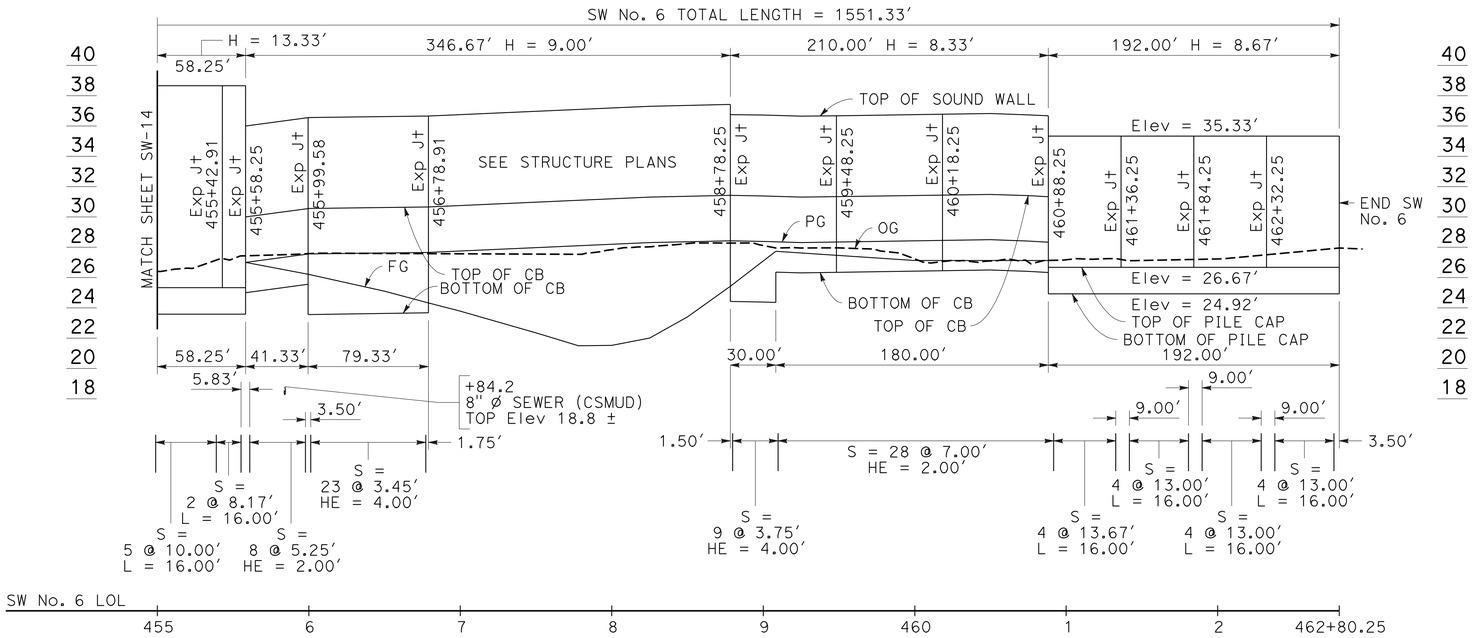

ELEVATION

SCALE: Horiz 1"=50'
Vert 1"=5'

CURVE DATA

No.	R	Δ	T	L
4	650.00'	25°23'11.2"	146.40'	288.00'

NOTES: (THIS SHEET ONLY)

1. FOR ACCURATE RIGHT OF WAY DATA, CONTACT RIGHT OF WAY ENGINEERING AT THE DISTRICT OFFICE.
2. FOR SOUND WALL DETAILS, SEE SHEET SW-2.

SOUND WALL
No. 6 ELEVATIONS

"SW6" LOL	PG	FG	TOP OF BARRIER	TOP OF WALL
455+58.25	27.00	27.00	30.00	36.00
455+99.58	27.56	26.22	30.56	36.56
455+99.58	27.56	26.22	30.56	36.56
456+00.00	27.57	26.21	30.57	36.57
456+50.00	27.63	25.10	30.63	36.63
456+78.91	27.67	24.33	30.67	36.67
458+78.25	28.43	25.43	31.43	36.76
459+00.00	28.39	27.18	31.39	36.72
459+08.25	28.36	27.73	31.36	36.69
459+08.25	28.36	27.73	31.36	36.69
459+50.00	28.35	27.46	31.35	36.68
460+00.00	28.42	27.13	31.42	36.75
460+50.00	28.49	27.13	31.49	36.82
460+88.25	28.34	27.13	31.34	36.67

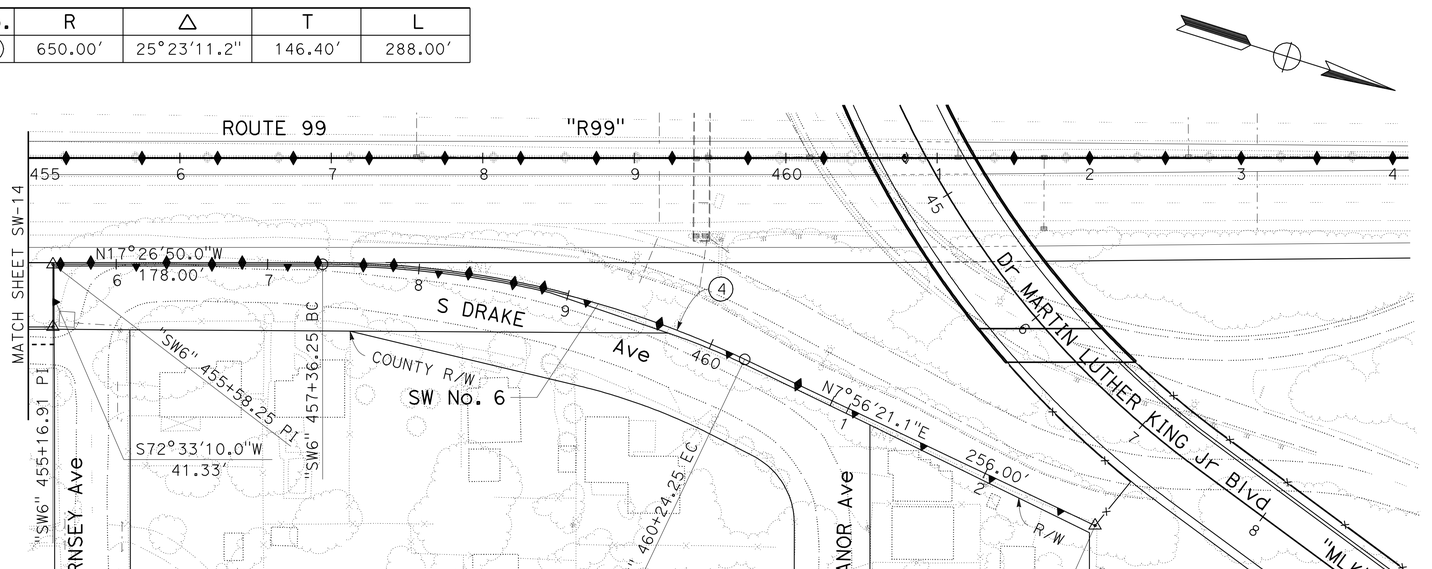

PLAN

SCALE: 1"=50'

APPROVED FOR SOUND WALL WORK ONLY

SOUND WALL PLAN
(SOUND WALL No. 6)

SCALE AS SHOWN

SW-15

STATE OF CALIFORNIA - DEPARTMENT OF TRANSPORTATION
Caltrans
06-DESIGN
FUNCTIONAL SUPERVISOR: MARTIN NISHIKAWA
CALCULATED-DESIGNED BY: LOREN E VINSON
CHECKED BY: SEAN PLEDGER
REVISED BY
DATE REVISED

LAST REVISION 05-26-11
DATE PLOTTED => 29-MAR-2012
TIME PLOTTED => 17:32

Dist	COUNTY	ROUTE	POST MILES TOTAL PROJECT	SHEET No.	TOTAL SHEETS
10	SJ	4,99	R19.5/R20.1, 15.0/18.6	819	1414

REGISTERED CIVIL ENGINEER 12-05-11 DATE

3-26-12
PLANS APPROVAL DATE

REGISTERED PROFESSIONAL ENGINEER SEAN M. PLEDGER No. 56328 Exp. 12-31-12 CIVIL STATE OF CALIFORNIA

THE STATE OF CALIFORNIA OR ITS OFFICERS OR AGENTS SHALL NOT BE RESPONSIBLE FOR THE ACCURACY OR COMPLETENESS OF SCANNED COPIES OF THIS PLAN SHEET.

NOTE: (THIS SHEET ONLY)

FOR "SW6" Sta 456+78.91 TO "SW6" Sta 458+78.25, SEE STRUCTURE PLANS.

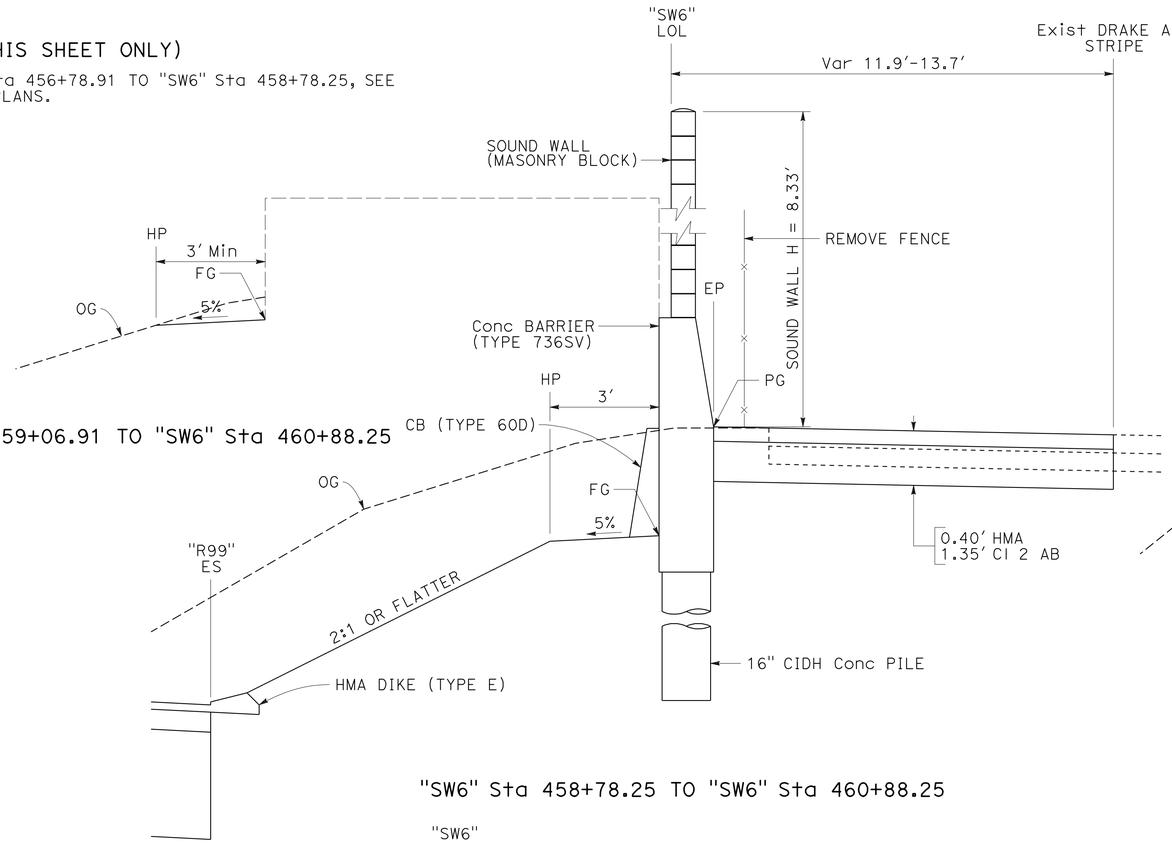

"SW6" Sta 459+06.91 TO "SW6" Sta 460+88.25

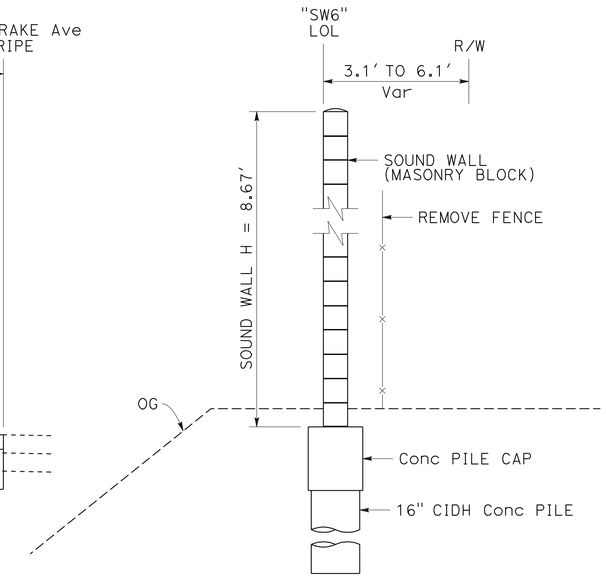

"SW6" Sta 460+88.25 TO "SW6" Sta 462+80.25

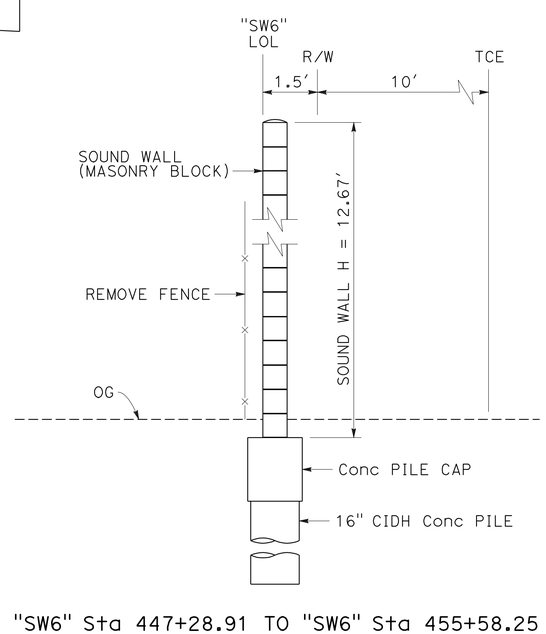

"SW6" Sta 447+28.91 TO "SW6" Sta 455+58.25

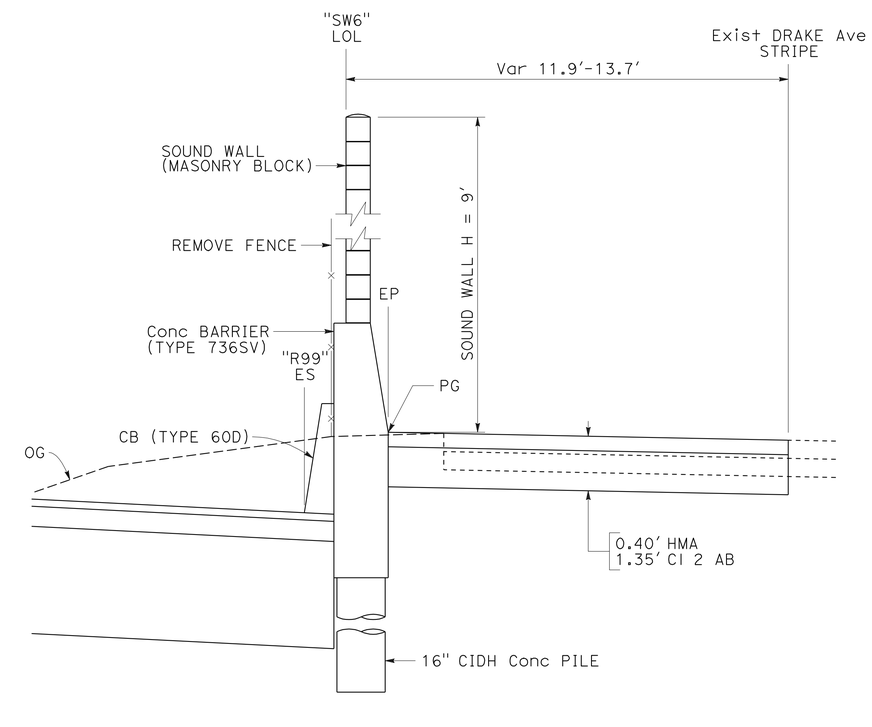

"SW6" Sta 455+58.25 TO "SW6" Sta 456+78.91

TYPICAL CROSS SECTION

APPROVED FOR SOUND WALL WORK ONLY

SOUND WALL PLAN
(SOUND WALL No. 6)
NO SCALE

SW-16

STATE OF CALIFORNIA - DEPARTMENT OF TRANSPORTATION
Caltrans®
06-DESIGN

FUNCTIONAL SUPERVISOR: MARTIN NISHIKAWA
CALCULATED-DESIGNED BY: LOREN E VINSON
CHECKED BY: SEAN PLEDGER
REVISED BY
DATE REVISED

LAST REVISION 05-26-11
DATE PLOTTED => 29-MAR-2012
TIME PLOTTED => 17:33

Dist	COUNTY	ROUTE	POST MILES TOTAL PROJECT	SHEET No.	TOTAL SHEETS
10	SJ	4,99	R19.5/R20.1, 15.0/18.6	820	1414

REGISTERED CIVIL ENGINEER DATE 12-05-11

PLANS APPROVAL DATE 3-26-12

REGISTERED PROFESSIONAL ENGINEER SEAN M. PLEDGER No. 56328 Exp. 12-31-12 CIVIL STATE OF CALIFORNIA

THE STATE OF CALIFORNIA OR ITS OFFICERS OR AGENTS SHALL NOT BE RESPONSIBLE FOR THE ACCURACY OR COMPLETENESS OF SCANNED COPIES OF THIS PLAN SHEET.

SOUND WALL No. 6 QUANTITIES

LOCATION	SOUND WALL (MASONRY BLOCK)	CONCRETE BARRIER (TYPE 736SV)	16" CIDH CONCRETE PILING	16" CIDH CONCRETE PILING (BARRIER)	STRUCTURAL CONCRETE (SOUND WALL)
	SQFT	LF	LF	LF	CY
SW No. 6 "SW6" Sta 447+28.91 TO "SW6" Sta 455+58.25	11,185.6		1392.0		80.6
SW No. 6 "SW6" Sta 455+58.25 TO "SW6" Sta 456+78.91	724.0	120.7		496.0	
SW No. 6 "SW6" Sta 458+78.25 TO "SW6" Sta 460+88.25	1119.3	210.0		592.0	
SW No. 6 "SW6" Sta 460+88.25 TO "SW6" Sta 462+80.25	1,664.6		256.0		18.7
TOTAL	14,693.5	330.7	1648.0	1088.0	99.3

APPROVED FOR SOUND WALL WORK ONLY

SOUND WALL PLAN
(SOUND WALL No. 6)
NO SCALE

SW-17

STATE OF CALIFORNIA - DEPARTMENT OF TRANSPORTATION
Caltrans
06-DESIGN

FUNCTIONAL SUPERVISOR: MARTIN NISHIKAWA
CALCULATED-DESIGNED BY: LOREN E VINSON
CHECKED BY: SEAN PLEDGER
REVISED BY
DATE REVISED

LAST REVISION 05-26-11
DATE PLOTTED => 29-MAR-2012
TIME PLOTTED => 17:33

Dist	COUNTY	ROUTE	POST MILES TOTAL PROJECT	SHEET No.	TOTAL SHEETS
10	SJ	4,99	R19.5/R20.1, 15.0/18.6	821	1414

REGISTERED CIVIL ENGINEER 12-05-11 DATE

3-26-12
PLANS APPROVAL DATE

REGISTERED PROFESSIONAL ENGINEER SEAN M. PLEDGER No. 56328 Exp. 12-31-12 CIVIL STATE OF CALIFORNIA

THE STATE OF CALIFORNIA OR ITS OFFICERS OR AGENTS SHALL NOT BE RESPONSIBLE FOR THE ACCURACY OR COMPLETENESS OF SCANNED COPIES OF THIS PLAN SHEET.

NOTES: (THIS SHEET ONLY)

1. FOR ACCURATE RIGHT OF WAY DATA, CONTACT RIGHT OF WAY ENGINEERING AT THE DISTRICT OFFICE.
2. FOR SOUND WALL DETAILS, SEE SHEET SW-2.

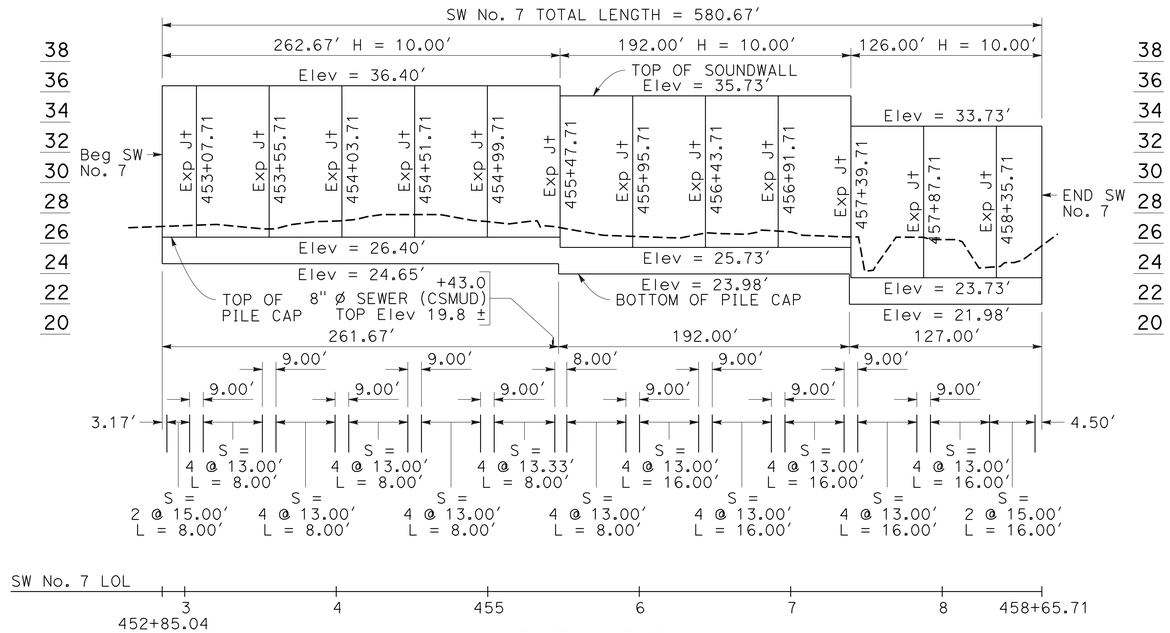

ELEVATION

SCALE: Horiz 1"=50'
Vert 1"=5'

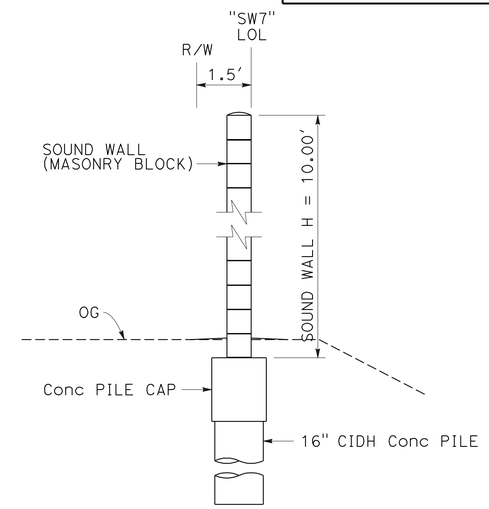

"SW7" Sta 455+95.71 TO "SW7" Sta 458+65.71

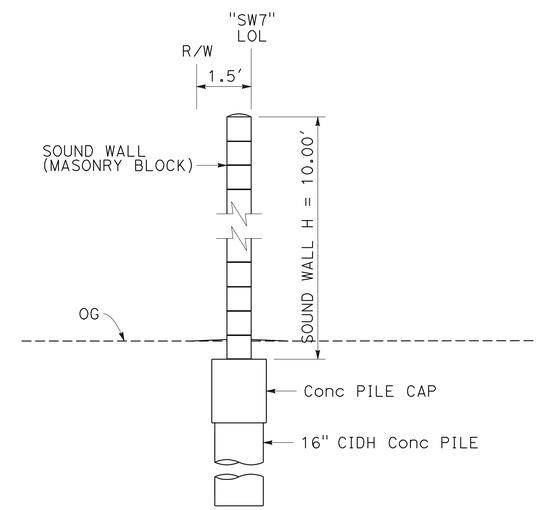

"SW7" Sta 452+85.04 TO "SW7" Sta 455+95.71

TYPICAL CROSS SECTION

NO SCALE

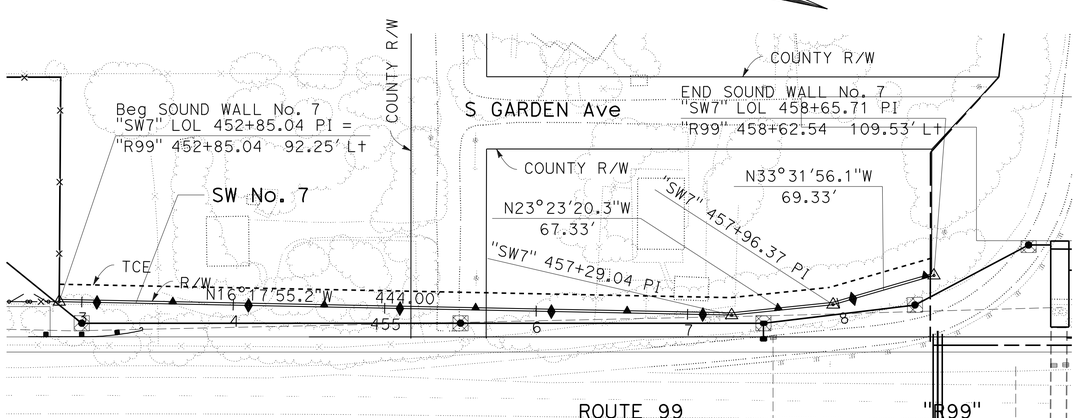

PLAN

SCALE: 1"=50'

SOUND WALL PLAN
(SOUND WALL No. 7)

SCALE AS SHOWN

APPROVED FOR SOUND WALL WORK ONLY

SW-18

STATE OF CALIFORNIA - DEPARTMENT OF TRANSPORTATION
Caltrans
06-DESIGN

FUNCTIONAL SUPERVISOR: MARTIN NISHIKAWA
CALCULATED-DESIGNED BY: LOREN E VINSON
CHECKED BY: SEAN PLEDGER
REVISED BY
DATE REVISED

LAST REVISION 05-26-11
DATE PLOTTED => 29-MAR-2012
TIME PLOTTED => 17:33

Dist	COUNTY	ROUTE	POST MILES TOTAL PROJECT	SHEET No.	TOTAL SHEETS
10	SJ	4,99	R19.5/R20.1, 15.0/18.6	822	1414

REGISTERED CIVIL ENGINEER DATE 12-05-11

PLANS APPROVAL DATE 3-26-12

REGISTERED PROFESSIONAL ENGINEER SEAN M. PLEDGER No. 56328 Exp. 12-31-12 CIVIL STATE OF CALIFORNIA

THE STATE OF CALIFORNIA OR ITS OFFICERS OR AGENTS SHALL NOT BE RESPONSIBLE FOR THE ACCURACY OR COMPLETENESS OF SCANNED COPIES OF THIS PLAN SHEET.

SOUND WALL No. 7 QUANTITIES

LOCATION	SOUND WALL (MASONRY BLOCK)	16" CIDH CONCRETE PILING	STRUCTURAL CONCRETE (SOUND WALL)
	SQFT	LF	CY
SW No. 7 "SW7" Sta 452+85.04 TO "SW7" Sta 458+65.71	5806.7	560.0	56.4

SOUND WALL PLAN
(SOUND WALL No. 7)
NO SCALE

SW-19

APPROVED FOR SOUND WALL WORK ONLY

STATE OF CALIFORNIA - DEPARTMENT OF TRANSPORTATION

Caltrans® 06-DESIGN

FUNCTIONAL SUPERVISOR: MARTIN NISHIKAWA

CALCULATED-DESIGNED BY: LOREN E VINSON

CHECKED BY: SEAN PLEDGER

REVISED BY

DATE REVISED

LAST REVISION 05-26-11

DATE PLOTTED => 29-MAR-2012

TIME PLOTTED => 17:33

Dist	COUNTY	ROUTE	POST MILES TOTAL PROJECT	SHEET No.	TOTAL SHEETS
10	SJ	4,99	R19.5/R20.1, 15.0/18.6	823	1414

REGISTERED CIVIL ENGINEER 12-05-11 DATE

3-26-12
PLANS APPROVAL DATE

REGISTERED PROFESSIONAL ENGINEER SEAN M. PLEDGER No. 56328 Exp. 12-31-12 CIVIL STATE OF CALIFORNIA

THE STATE OF CALIFORNIA OR ITS OFFICERS OR AGENTS SHALL NOT BE RESPONSIBLE FOR THE ACCURACY OR COMPLETENESS OF SCANNED COPIES OF THIS PLAN SHEET.

NOTES: (THIS SHEET ONLY)

1. FOR ACCURATE RIGHT OF WAY DATA, CONTACT RIGHT OF WAY ENGINEERING AT THE DISTRICT OFFICE.
2. FOR SOUND WALL DETAILS, SEE SHEET SW-2.

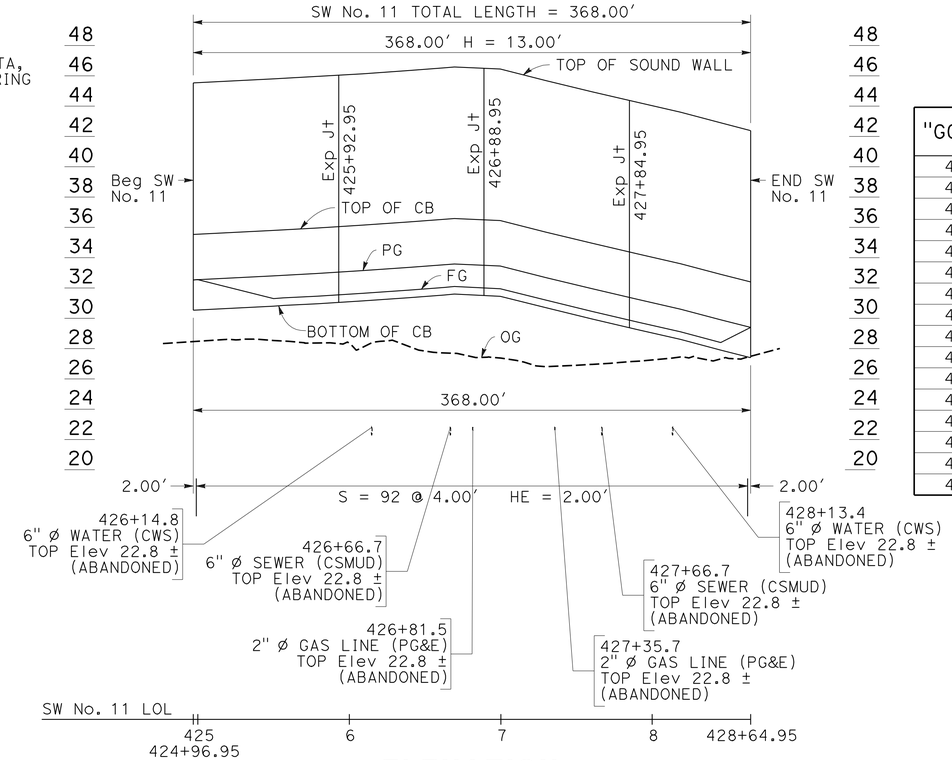

ELEVATION

SCALE: Horiz 1"=50'
Vert 1"=5'

SOUND WALL
No. 11 ELEVATIONS

"GG4" ℄ Sta	"SW11" LOL	PG	FG	TOP OF BARRIER	TOP OF WALL
424+96.95	424+96.95	32.54	32.54	35.54	45.54
425+00.00	425+00.00	32.55	32.55	35.55	45.55
425+50.00	425+50.00	32.80	31.30	35.80	45.80
425+56.67	425+56.67	32.84	31.34	35.84	45.84
425+75.00	425+78.82	32.96	31.46	35.96	45.96
426+00.00	426+09.03	33.15	31.65	36.15	46.15
426+25.00	426+39.24	33.36	31.86	36.36	46.36
426+44.18	426+62.41	33.54	32.01	36.54	46.54
426+50.00	426+69.44	33.59	32.09	36.59	46.59
426+75.00	426+99.65	33.45	31.95	36.45	46.45
427+00.00	427+29.86	32.69	31.19	35.69	45.69
427+25.00	427+60.07	31.96	30.46	34.96	44.96
427+50.00	427+90.28	31.25	29.75	34.25	44.25
427+73.48	428+18.65	30.60	29.10	33.60	43.60
428+00.00	428+45.17	29.90	28.40	32.90	42.90
428+19.78	428+64.95	29.40	29.40	32.40	42.40

CURVE DATA

No.	R	Δ	T	L
6	217.50'	69°00'43.7"	149.52'	261.98'

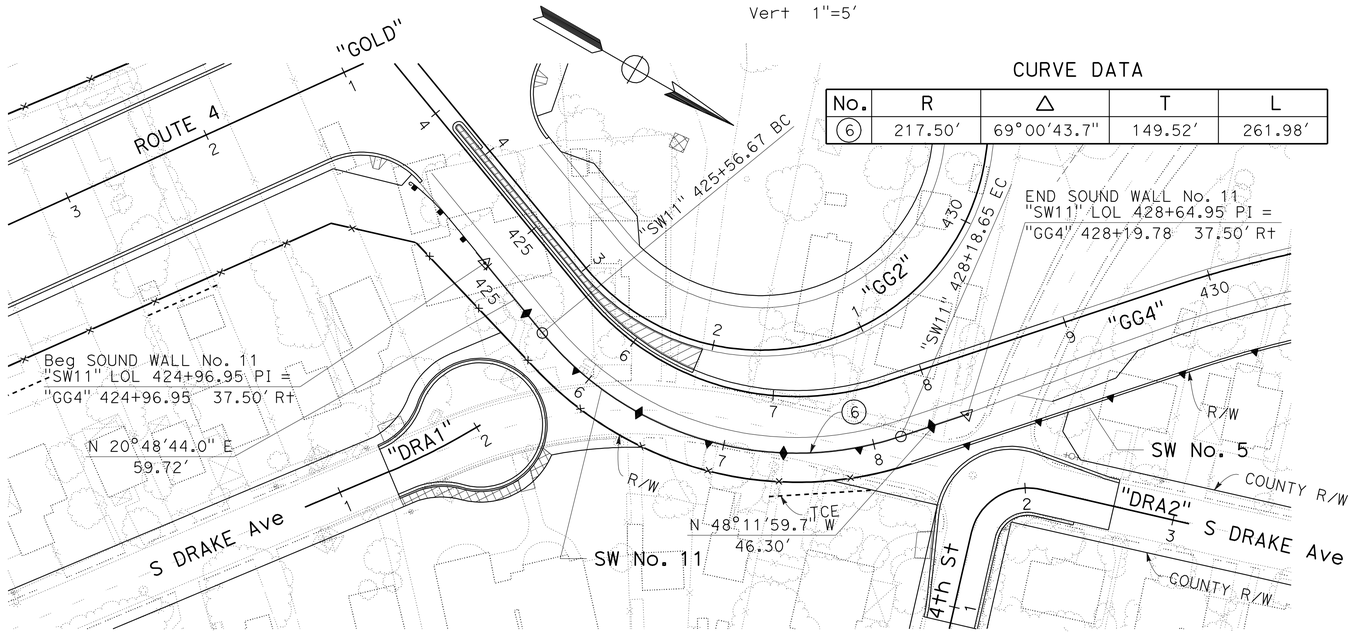

PLAN

SCALE: 1"=50'

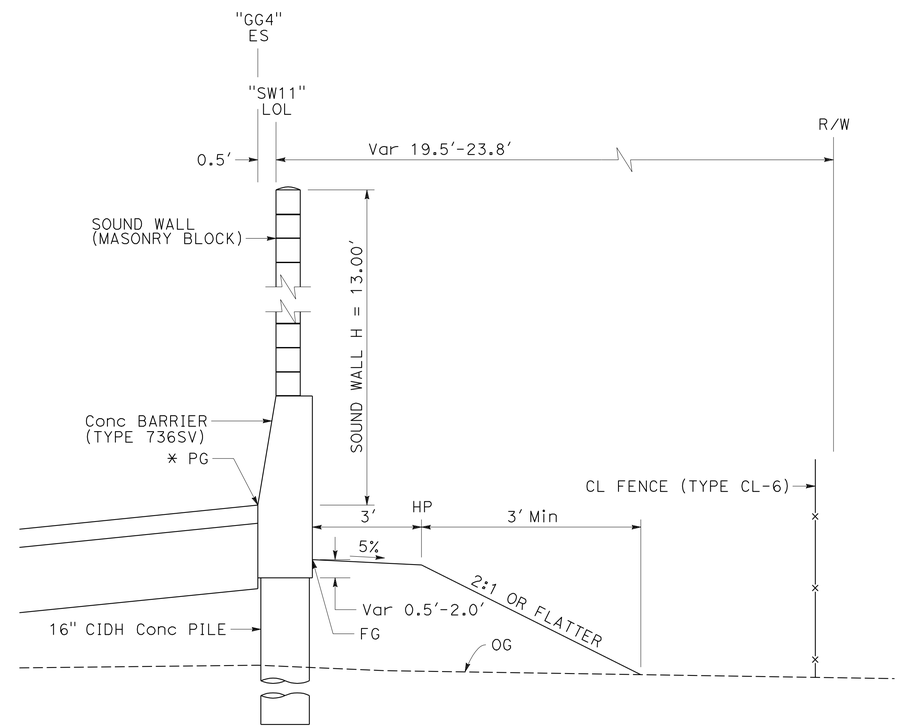

* PG CONTROLLED BY "GG4" ES

"SW11" Sta 424+96.95 TO "SW11" Sta 428+64.95

TYPICAL CROSS SECTION

NO SCALE

SOUND WALL PLAN
(SOUND WALL No. 11)

SCALE AS SHOWN

SW-20

APPROVED FOR SOUND WALL WORK ONLY

STATE OF CALIFORNIA - DEPARTMENT OF TRANSPORTATION
Caltrans®
06-DESIGN

FUNCTIONAL SUPERVISOR: MARTIN NISHIKAWA
CALCULATED-DESIGNED BY: LOREN E VINSON
CHECKED BY: SEAN PLEDGER
REVISED BY
DATE REVISED

LAST REVISION 05-26-11
DATE PLOTTED => 29-MAR-2012
TIME PLOTTED => 17:33

Dist	COUNTY	ROUTE	POST MILES TOTAL PROJECT	SHEET No.	TOTAL SHEETS
10	SJ	4,99	R19.5/R20.1, 15.0/18.6	824	1414

Sean Pledger 12-05-11
REGISTERED CIVIL ENGINEER DATE

3-26-12
PLANS APPROVAL DATE

REGISTERED PROFESSIONAL ENGINEER
SEAN M. PLEDGER
No. 56328
Exp. 12-31-12
CIVIL
STATE OF CALIFORNIA

THE STATE OF CALIFORNIA OR ITS OFFICERS OR AGENTS SHALL NOT BE RESPONSIBLE FOR THE ACCURACY OR COMPLETENESS OF SCANNED COPIES OF THIS PLAN SHEET.

SOUND WALL No. 11 QUANTITIES

LOCATION	SOUND WALL (MASONRY BLOCK)	CONCRETE BARRIER (TYPE 736SV)	16" CIDH CONCRETE PILING (BARRIER)
	SQFT	LF	LF
SW No. 11 "SW11" Sta 424+96.95 TO "SW11" Sta 428+64.95	3,680.0	368.0	1472.0

SOUND WALL PLAN
(SOUND WALL No. 11)
NO SCALE

SW-21

APPROVED FOR SOUND WALL WORK ONLY

REVISED BY	DATE REVISED

CALCULATED-DESIGNED BY: LOREN E VINSON
CHECKED BY: SEAN PLEDGER
FUNCTIONAL SUPERVISOR: MARTIN NISHIKAWA

STATE OF CALIFORNIA - DEPARTMENT OF TRANSPORTATION
Caltrans
06-DESIGN

LAST REVISION 05-26-11
DATE PLOTTED => 29-MAR-2012
TIME PLOTTED => 17:33

Dist	COUNTY	ROUTE	POST MILES TOTAL PROJECT	SHEET No.	TOTAL SHEETS
10	SJ	4,99	R19.5/R20.1, 15.0/18.6	825	1414

REGISTERED ELECTRICAL ENGINEER 12-07-11 DATE

3-26-12
PLANS APPROVAL DATE

REGISTERED PROFESSIONAL ENGINEER HASHIM KHALID No. 18054 Exp. 6/30/13 ELECTRICAL STATE OF CALIFORNIA

THE STATE OF CALIFORNIA OR ITS OFFICERS OR AGENTS SHALL NOT BE RESPONSIBLE FOR THE ACCURACY OR COMPLETENESS OF SCANNED COPIES OF THIS PLAN SHEET.

NOTES: (FOR SHEETS E-1 TO E-18)

1 120/240 V, 1Ø, 3-WIRE TYPE III-CF SERVICE EQUIPMENT ENCLOSURE WITH THE FOLLOWING CIRCUIT BREAKERS:

CTID No. 10290990018560T

AMPERES	VOLTS	POLES	NAMEPLATE	METER	PHOTOELECTRIC CONTROL TYPE
100	240	2	MAIN	YES	——
30	120	1	VCS	YES	——
30	120	1	FIBER	YES	——
15	120	1	SPARE	YES	——
——	——	6	SPACE	——	——

CTID No. 10290990018560L

AMPERES	VOLTS	POLES	NAMEPLATE	METER	PHOTOELECTRIC CONTROL TYPE
100	240	2	MAIN	YES	——
30	240	2	HIGHWAY LIGHTING	YES	V
30	240	2	SIGN LIGHTING	YES	LC3
15	120	1	LIGHT CONTROL	YES	——
30	240	2	SPARE	YES	——
——	——	6	SPACE	——	——

2 MODEL 334 CABINET WITH STATE-FURNISHED MODEL 2070 CONTROLLER UNIT FOR TMS.

3 NOT USED.

4 INDUCTIVE LOOP DETECTORS SHALL BE PLACED AND IDENTIFIED AS SHOWN IN DETAIL B ON SHEET E-47.

5 INDUCTIVE LOOP DETECTORS SHALL BE PLACED AND IDENTIFIED AS SHOWN IN DETAIL C ON SHEET E-47.

6 RL Exist MODEL 500 CMS SIGN AND CCTV TO SHEET E-14, Sta 452+70.

7 RL Exist MODEL 500 CMS SIGN AND CCTV FROM SHEET E-13, Sta 444+30.

8 RL Exist MODEL 334 CABINET WITH CMS EQUIPMENT TO SHEET E-14, Sta 453+50.

9 RL Exist MODEL 334 CABINET WITH CMS EQUIPMENT FROM SHEET E-13, Sta 444+70.

10 MODIFIED MODEL 334 CABINET FOR FIBER OPTIC SYSTEM PER DETAILS ON SHEET E-56.

11 No. 6(E)(T) PULL BOX PER DETAILS ON SHEET E-58.

12 SPLICE VAULT PER DETAILS ON SHEETS E-58 AND E-59.

13 RL Exist MODEL 334 CABINET WITH CCTV EQUIPMENT TO SHEET E-14, Sta 452+50.

14 RL Exist MODEL 334 CABINET WITH CCTV EQUIPMENT FROM SHEET E-13, Sta 444+20.

15 FIBER OPTIC CONDUIT PER DETAILS A AND B ON SHEET E-60.

16 FIBER OPTIC CONDUIT PER DETAIL A ON SHEET E-60.

17 RC Exist TYPE A SERVICE AND WOOD POLE.

18 PULL BOX PER UTILITY REQUIREMENTS.

19 120/240 V, 1Ø, 3-WIRE TYPE III-AF SERVICE EQUIPMENT ENCLOSURE WITH THE FOLLOWING CIRCUIT BREAKERS:

CTID No. 10290990011850T

AMPERES	VOLTS	POLES	NAMEPLATE	METER	PHOTOELECTRIC CONTROL TYPE
100	240	2	MAIN	YES	——
30	120	1	CMS	YES	——
30	120	1	CCTV	YES	——
20	120	1	IRRIGATION	YES	——
30	240	2	CMS LAMPS	YES	——
30	120	1	SPARE	YES	——
——	——	6	SPACE	——	——

20 COIL 50′ OF ALL CONDUCTORS IN PB FOR FUTURE CONNECTION.

21 MODEL 334 CABINET WITH ATC AND STATE-FURNISHED MODEL 2070 CONTROLLER UNIT FOR VCS.

22 Exist HUB ON ARCH Rd AT PM 14.55.

23 SPACE INDUCTIVE LOOP DETECTOR AT 20′ LEADING EDGE TO LEADING EDGE.

24 TYPE 1-D SIGNAL STANDARD PER DETAIL D ON SHEET E-47 AND POLE DETAIL ON SES-1.

25 STATE-FURNISHED MODEL 2070 CONTROLLER ASSEMBLY FOR RAMP METERING SYSTEM.

26 INDUCTIVE LOOP DETECTORS AND PIEZO AXLE SENSORS SHALL BE PLACED AND IDENTIFIED AS SHOWN IN DETAIL H AND I ON SHEET E-47.

27 TYPE 15TS SIGNAL STANDARD PER DETAIL G ON SHEET E-47 AND POLE DETAIL ON SES-2.

28 CMS EQUIPMENT GROUNDING ELECTRODE IN PULL BOX.

29 INSTALL A CONCRETE CAP AROUND HANDHOLE PER DETAIL D ON SHEET E-48.

30 SPLICE 144 SMFO TO Exist 144 SMFO PER DETAIL ON SHEET E-50.

31 FIBER OPTIC CONDUIT PER DETAIL C ON SHEET E-60.

32 COORDINATE WITH PG&E TO DE-ENERGIZE AND RE-ENERGIZE THE CIRCUIT WHILE WORK IS PERFORMED.

33 FOR ALL SERVICE REQUIREMENTS, THE CONTRACTOR SHALL COORDINATE WITH SERVICE UTILITY.

34 ALL PULL BOXES SHALL BE No. 5(E) UNLESS OTHERWISE NOTED ON PLANS.

ABBREVIATIONS:

AT&T	AMERICAN TELEPHONE AND TELEGRAPH
CTID	CALTRANS IDENTIFICATION
PG&E	PACIFIC GAS AND ELECTRIC COMPANY
EQG	EQUIPMENT GROUND
HDPE	HIGH DENSITY POLYETHYLENE
SMFO	SINGLEMODE FIBER OPTIC CABLE
TCS	TRAFFIC COUNT STATION
STC	SCREENED TRANSMISSION CABLE
ATC	AUTOMATED TRAFFIC COUNTER
VCS	VEHICLE CLASSIFICATION STATION
LIU	LIGHT GUIDE INTERCONNECT UNIT
SC	COMPRESSION CONNECTOR
ST	STRAIGHT TIP CONNECTOR

CMS AND CCTV CONDUIT AND CONDUCTOR SCHEDULE

CABLE/ AWG SIZE	CIRCUIT	CONDUIT RUN NUMBER AND SIZE							
		1	2	3	4	5	6	7	8
		3"	2-3"	3"	3"	3"	3"	3"	3"
#6	334 CABINET (CCTV)	2			2			2	
#6	334 CABINET (CMS)	2	2				2		
#10	IRRIGATION CONTROLLER	2							
#4	CMS NEUTRAL	1							1
	CMS HARNESS No. 4		1	1					
	CMS HARNESS No. 5		1	1					
#6	CMS LAMPS	2							2
	* CAMERA COMPOSITE CABLE				1	1			

* CAMERA COMPOSITE CABLE SHALL BE COMPATIBLE WITH Exist CCTV SYSTEM.

LEGEND:

V — SPLICE VAULT

8A/4 — CITY OF STOCKTON DETECTOR DESIGNATION (Typ); NUMBER OF LOOPS (Typ)

ELECTRIC SERVICE (IRRIGATION)
VEHICLE CLASSIFICATION STATION
MODIFY CHANGEABLE MESSAGE SIGN SYSTEM
MODIFY CLOSED CIRCUIT TELEVISION SYSTEM
TRAFFIC MONITORING STATION
RAMP METERING SYSTEM
FIBER OPTIC SYSTEM

APPROVED FOR ELECTRICAL WORK ONLY

E-1

STATE OF CALIFORNIA - DEPARTMENT OF TRANSPORTATION
Caltrans 06-ELECTRICAL DESIGN
FUNCTIONAL SUPERVISOR: ALI BAKHDOUD
CALCULATED-DESIGNED BY: HASHIM KHALID
CHECKED BY: OMAR MENDOZA
REVISED BY / DATE REVISED

LAST REVISION 12-08-11
DATE PLOTTED => 30-MAR-2012
TIME PLOTTED => 11:25

Dist	COUNTY	ROUTE	POST MILES TOTAL PROJECT	SHEET No.	TOTAL SHEETS
10	SJ	4,99	R19.5/R20.1, 15.0/18.6	826	1414

REGISTERED ELECTRICAL ENGINEER 12-07-11 DATE

3-26-12
PLANS APPROVAL DATE

REGISTERED PROFESSIONAL ENGINEER HASHIM KHALID No. 18054 Exp. 6/30/13 ELECTRICAL STATE OF CALIFORNIA

THE STATE OF CALIFORNIA OR ITS OFFICERS OR AGENTS SHALL NOT BE RESPONSIBLE FOR THE ACCURACY OR COMPLETENESS OF SCANNED COPIES OF THIS PLAN SHEET.

NOTES:

1. FOR NOTES AND SCHEDULES, SEE SHEET E-1.
2. FOR ACCURATE RIGHT OF WAY DATA, CONTACT RIGHT OF WAY ENGINEERING AT THE DISTRICT OFFICE.

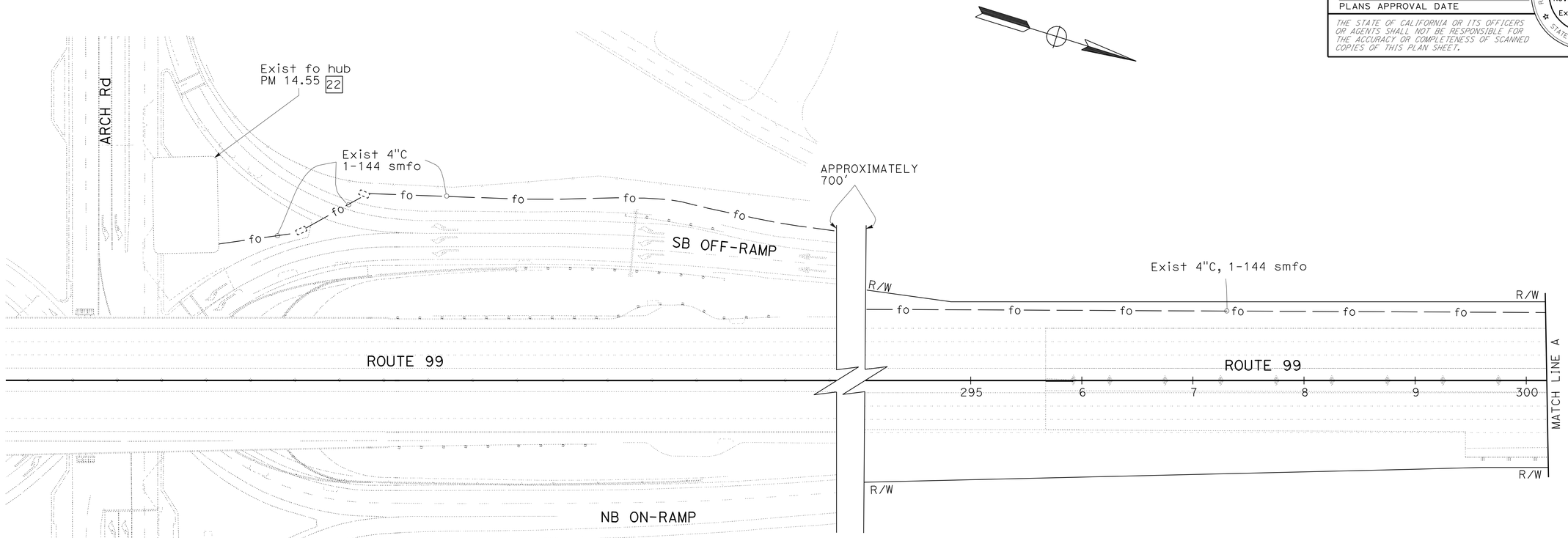

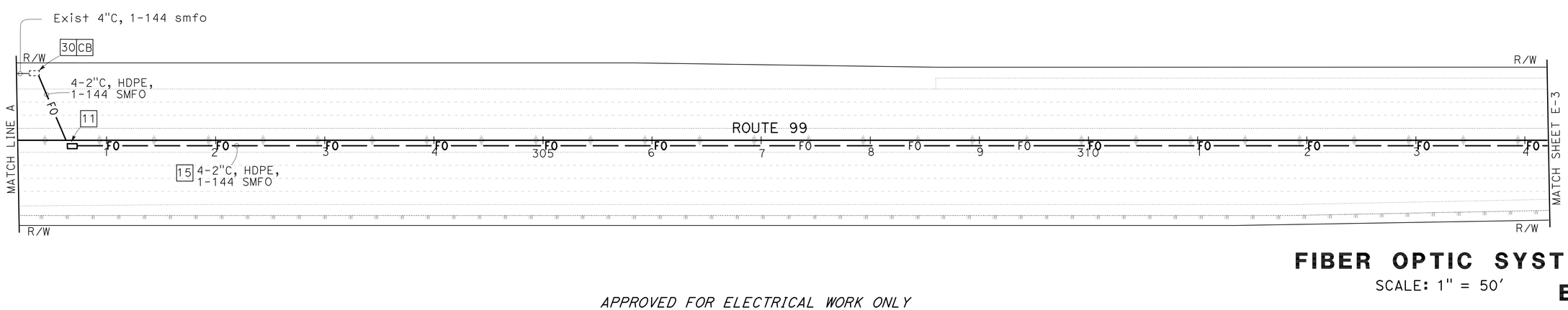

FIBER OPTIC SYSTEM

SCALE: 1" = 50'

E-2

APPROVED FOR ELECTRICAL WORK ONLY

STATE OF CALIFORNIA - DEPARTMENT OF TRANSPORTATION
Caltrans 06-ELECTRICAL DESIGN

FUNCTIONAL SUPERVISOR: ALI BAKHDOUD
CALCULATED-DESIGNED BY: HASHIM KHALID
CHECKED BY: OMAR MENDOZA
REVISED BY
DATE REVISED

LAST REVISION 12-08-11
DATE PLOTTED => 28-MAR-2012
TIME PLOTTED => 13:27

Dist	COUNTY	ROUTE	POST MILES TOTAL PROJECT	SHEET No.	TOTAL SHEETS
10	SJ	4,99	R19.5/R20.1, 15.0/18.6	827	1414

REGISTERED ELECTRICAL ENGINEER 12-07-11 DATE

3-26-12
PLANS APPROVAL DATE

REGISTERED PROFESSIONAL ENGINEER HASHIM KHALID No. 18054 Exp. 6/30/13 ELECTRICAL STATE OF CALIFORNIA

THE STATE OF CALIFORNIA OR ITS OFFICERS OR AGENTS SHALL NOT BE RESPONSIBLE FOR THE ACCURACY OR COMPLETENESS OF SCANNED COPIES OF THIS PLAN SHEET.

NOTES:

1. FOR NOTES AND SCHEDULES, SEE SHEET E-1.
2. FOR ACCURATE RIGHT OF WAY DATA, CONTACT RIGHT OF WAY ENGINEERING AT THE DISTRICT OFFICE.

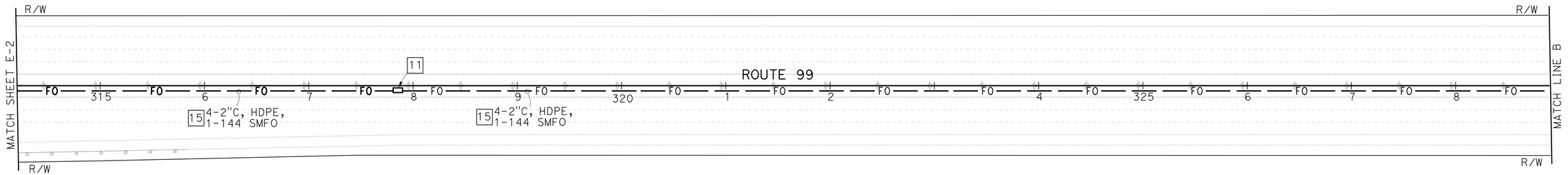

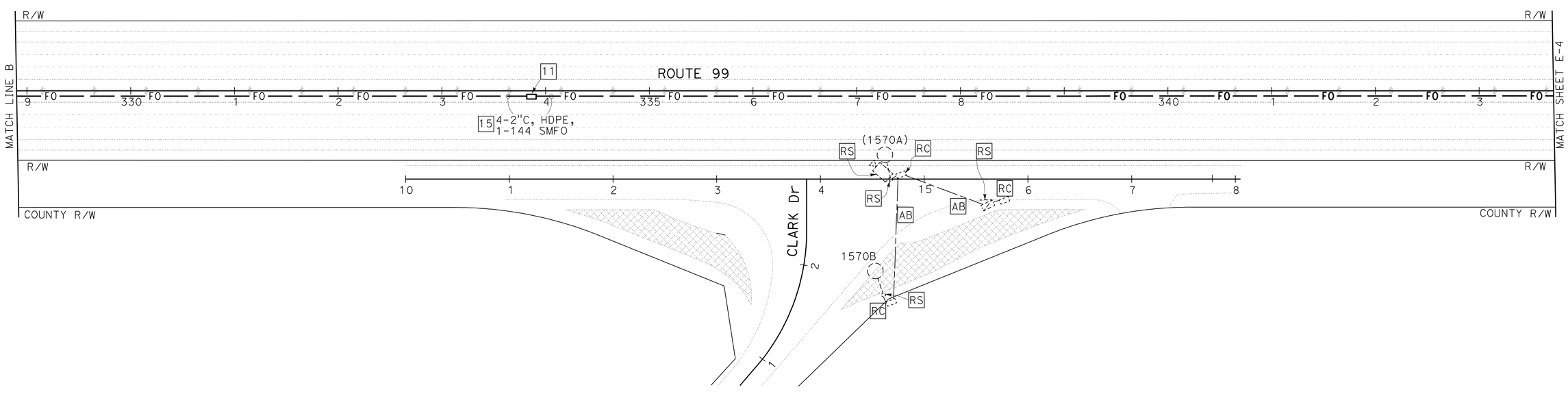

MODIFY LIGHTING AND SIGN ILLUMINATION FIBER OPTIC SYSTEM

SCALE: 1" = 50'

E-3

APPROVED FOR ELECTRICAL WORK ONLY

STATE OF CALIFORNIA - DEPARTMENT OF TRANSPORTATION
Caltrans 06-ELECTRICAL DESIGN

FUNCTIONAL SUPERVISOR: ALI BAKHDOUD
CALCULATED-DESIGNED BY: OMAR MENDOZA
CHECKED BY: HASHIM KHALID
REVISED BY / DATE REVISED

LAST REVISION 12-08-11
DATE PLOTTED => 28-MAR-2012
TIME PLOTTED => 13:27

Dist	COUNTY	ROUTE	POST MILES TOTAL PROJECT	SHEET No.	TOTAL SHEETS
10	SJ	4,99	R19.5/R20.1, 15.0/18.6	828	1414

REGISTERED ELECTRICAL ENGINEER 12-07-11 DATE

3-26-12
PLANS APPROVAL DATE

REGISTERED PROFESSIONAL ENGINEER HASHIM KHALID No. 18054 Exp. 6/30/13 ELECTRICAL STATE OF CALIFORNIA

THE STATE OF CALIFORNIA OR ITS OFFICERS OR AGENTS SHALL NOT BE RESPONSIBLE FOR THE ACCURACY OR COMPLETENESS OF SCANNED COPIES OF THIS PLAN SHEET.

NOTES:

1. FOR NOTES AND SCHEDULES, SEE SHEET E-1.
2. FOR ACCURATE RIGHT OF WAY DATA, CONTACT RIGHT OF WAY ENGINEERING AT THE DISTRICT OFFICE.

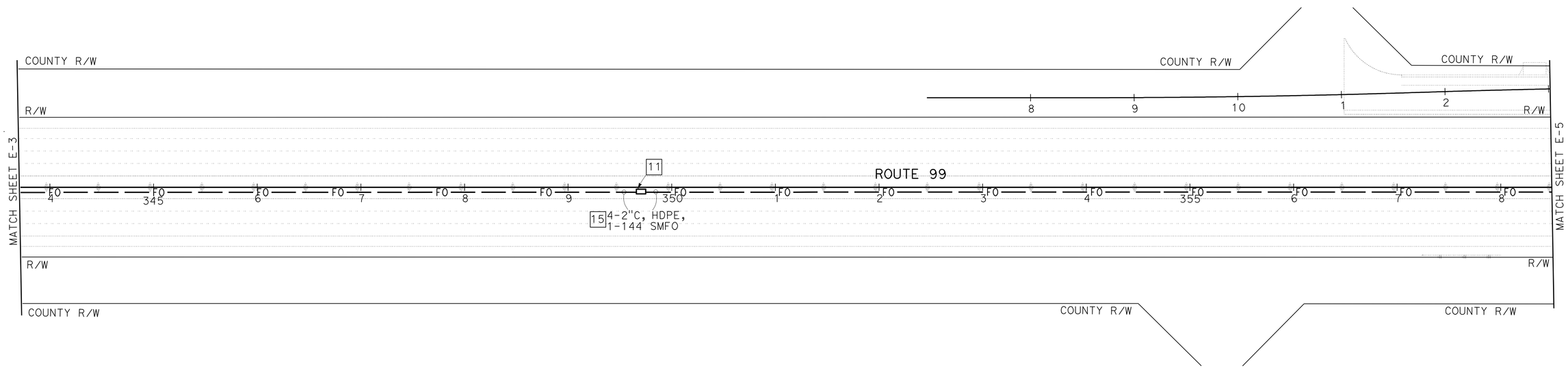

FIBER OPTIC SYSTEM

SCALE: 1" = 50'

E-4

APPROVED FOR ELECTRICAL WORK ONLY

STATE OF CALIFORNIA - DEPARTMENT OF TRANSPORTATION
Caltrans® 06-ELECTRICAL DESIGN

FUNCTIONAL SUPERVISOR: ALI BAKHDOUD
CALCULATED-DESIGNED BY: HASHIM KHALID
CHECKED BY: OMAR MENDOZA
REVISED BY
DATE REVISED

LAST REVISION 12-08-11
DATE PLOTTED => 28-MAR-2012
TIME PLOTTED => 13:27

Dist	COUNTY	ROUTE	POST MILES TOTAL PROJECT	SHEET No.	TOTAL SHEETS
10	SJ	4,99	R19.5/R20.1, 15.0/18.6	829	1414

REGISTERED ELECTRICAL ENGINEER 12-07-11 DATE

3-26-12
PLANS APPROVAL DATE

REGISTERED PROFESSIONAL ENGINEER HASHIM KHALID No. 18054 Exp. 6/30/13 ELECTRICAL STATE OF CALIFORNIA

THE STATE OF CALIFORNIA OR ITS OFFICERS OR AGENTS SHALL NOT BE RESPONSIBLE FOR THE ACCURACY OR COMPLETENESS OF SCANNED COPIES OF THIS PLAN SHEET.

NOTES:

1. FOR NOTES AND SCHEDULES, SEE SHEET E-1.
2. FOR ACCURATE RIGHT OF WAY DATA, CONTACT RIGHT OF WAY ENGINEERING AT THE DISTRICT OFFICE.

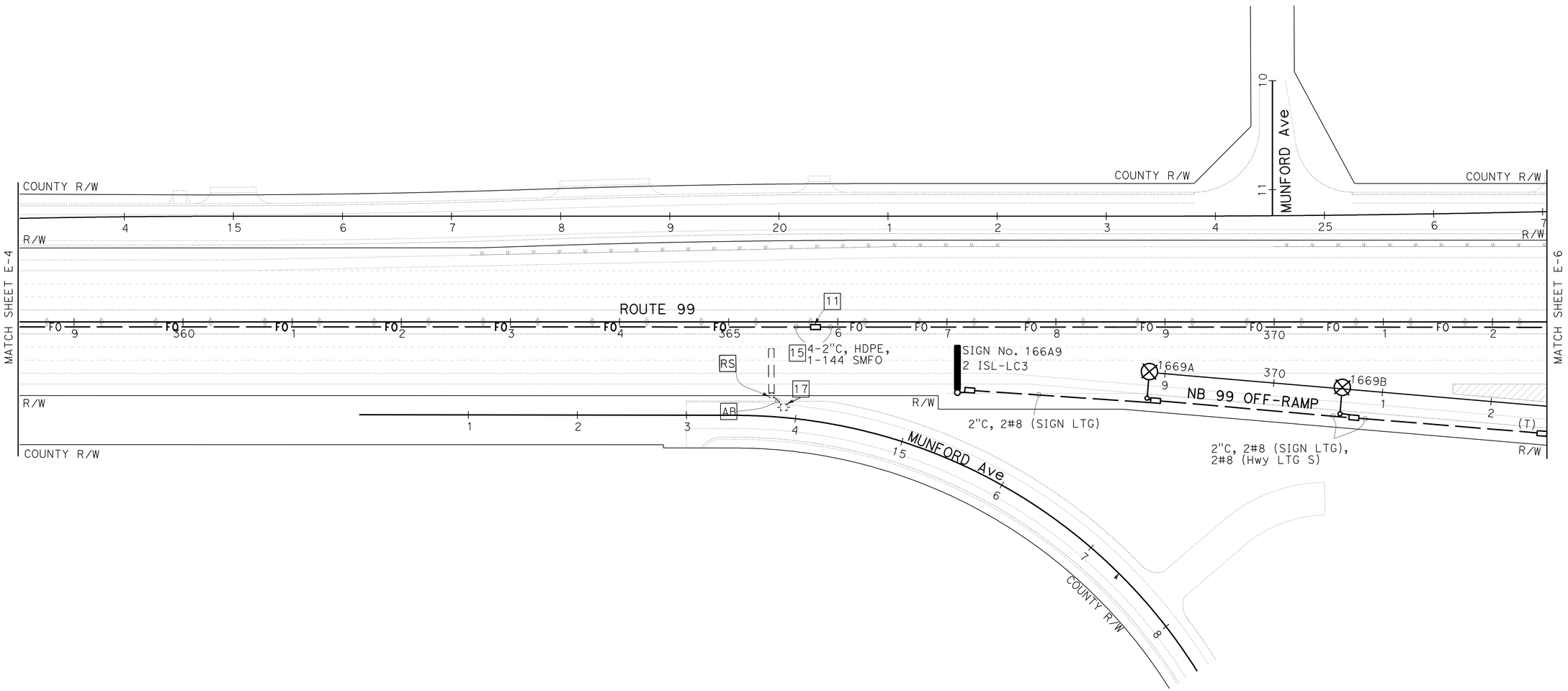

MODIFY LIGHTING AND SIGN ILLUMINATION FIBER OPTIC SYSTEM

SCALE: 1" = 50'

E-5

APPROVED FOR ELECTRICAL WORK ONLY

STATE OF CALIFORNIA - DEPARTMENT OF TRANSPORTATION
Caltrans 06-ELECTRICAL DESIGN

FUNCTIONAL SUPERVISOR: ALI BAKHDOUD
CALCULATED-DESIGNED BY: HASHIM KHALID
CHECKED BY: OMAR MENDOZA
REVISED BY
DATE REVISED

LAST REVISION 12-08-11 | DATE PLOTTED => 28-MAR-2012 | TIME PLOTTED => 13:27

Dist	COUNTY	ROUTE	POST MILES TOTAL PROJECT	SHEET No.	TOTAL SHEETS
10	SJ	4,99	R19.5/R20.1, 15.0/18.6	830	1414

REGISTERED ELECTRICAL ENGINEER 12-07-11 DATE

3-26-12
PLANS APPROVAL DATE

REGISTERED PROFESSIONAL ENGINEER HASHIM KHALID No. 18054 Exp. 6/30/13 ELECTRICAL STATE OF CALIFORNIA

THE STATE OF CALIFORNIA OR ITS OFFICERS OR AGENTS SHALL NOT BE RESPONSIBLE FOR THE ACCURACY OR COMPLETENESS OF SCANNED COPIES OF THIS PLAN SHEET.

NOTES:

1. FOR NOTES AND SCHEDULES, SEE SHEET E-1.
2. FOR ACCURATE RIGHT OF WAY DATA, CONTACT RIGHT OF WAY ENGINEERING AT THE DISTRICT OFFICE.

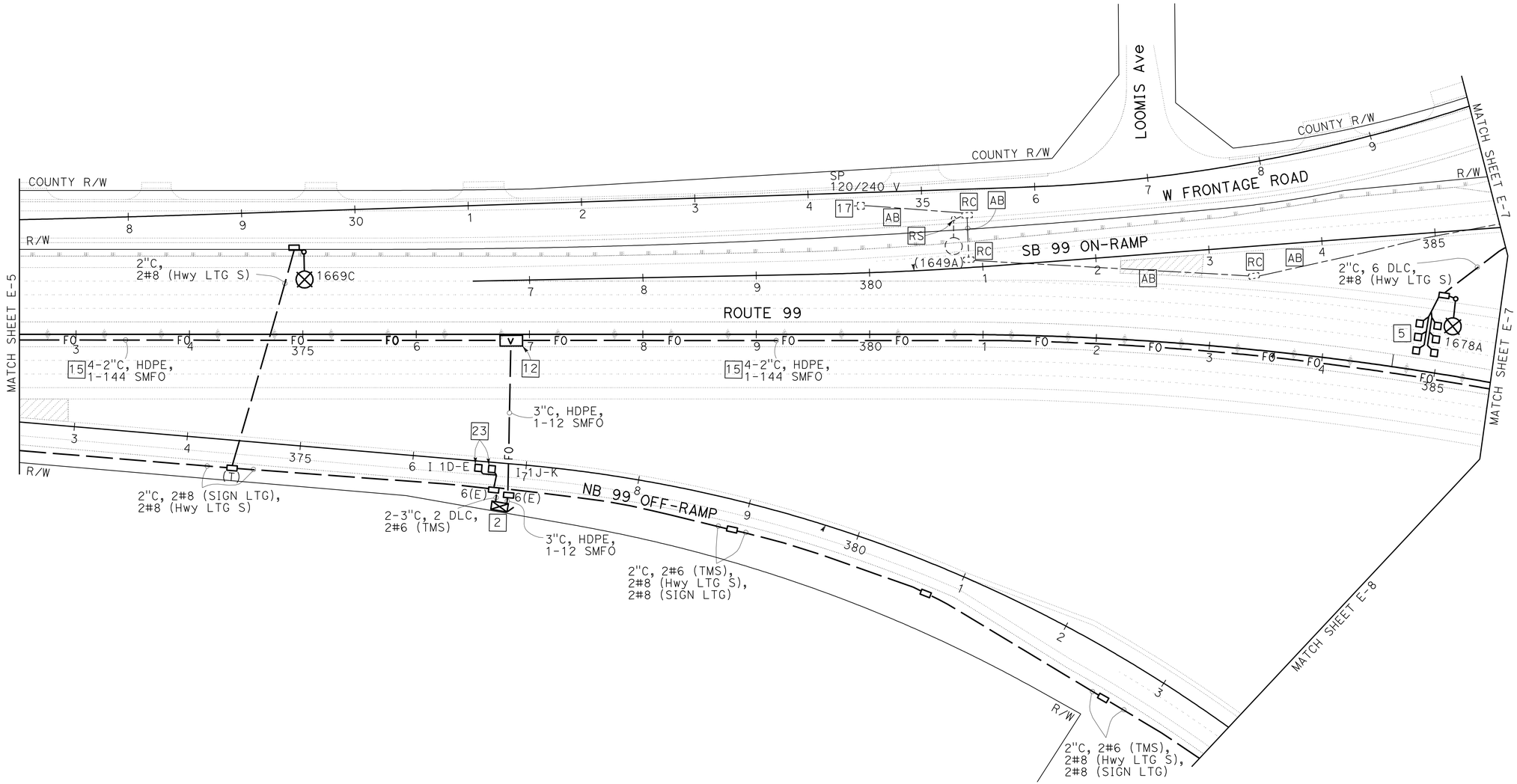

TRAFFIC MONITORING STATION (LOCATION 1)
RAMP METERING SYSTEM (LOCATION 1)
MODIFY LIGHTING AND SIGN ILLUMINATION
FIBER OPTIC SYSTEM

SCALE: 1" = 50'

E-6

APPROVED FOR ELECTRICAL WORK ONLY

STATE OF CALIFORNIA - DEPARTMENT OF TRANSPORTATION
Caltrans 06-ELECTRICAL DESIGN

FUNCTIONAL SUPERVISOR: ALI BAKHDOUD
CALCULATED-DESIGNED BY: OMAR MENDOZA
CHECKED BY: HASHIM KHALID
REVISED BY / DATE REVISED

LAST REVISION 12-08-11 | DATE PLOTTED => 28-MAR-2012 | TIME PLOTTED => 13:27

BORDER LAST REVISED 7/2/2010 | USERNAME => s121614 | DGN FILE => a3a100ua006.dgn | RELATIVE BORDER SCALE IS IN INCHES 0 1 2 3 | UNIT 1515 | PROJECT NUMBER & PHASE 10000004091

Dist	COUNTY	ROUTE	POST MILES TOTAL PROJECT	SHEET No.	TOTAL SHEETS
10	SJ	4,99	R19.5/R20.1, 15.0/18.6	831	1414

REGISTERED ELECTRICAL ENGINEER 12-07-11 DATE

3-26-12
PLANS APPROVAL DATE

REGISTERED PROFESSIONAL ENGINEER HASHIM KHALID No. 18054 Exp. 6/30/13 ELECTRICAL STATE OF CALIFORNIA

THE STATE OF CALIFORNIA OR ITS OFFICERS OR AGENTS SHALL NOT BE RESPONSIBLE FOR THE ACCURACY OR COMPLETENESS OF SCANNED COPIES OF THIS PLAN SHEET.

NOTES:

1. FOR NOTES AND SCHEDULES, SEE SHEET E-1.
2. FOR ACCURATE RIGHT OF WAY DATA, CONTACT RIGHT OF WAY ENGINEERING AT THE DISTRICT OFFICE.

DETAIL A
NO SCALE

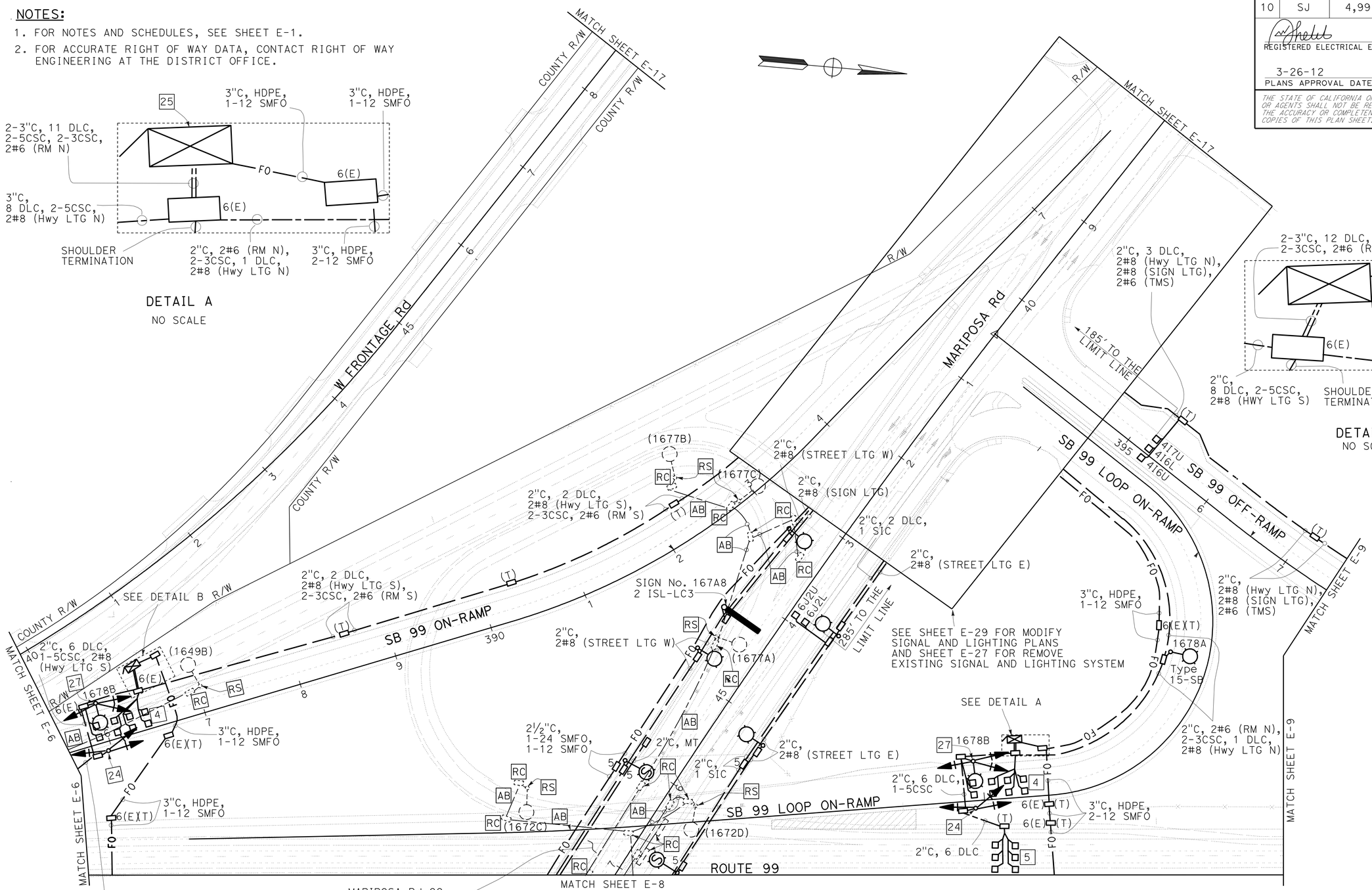

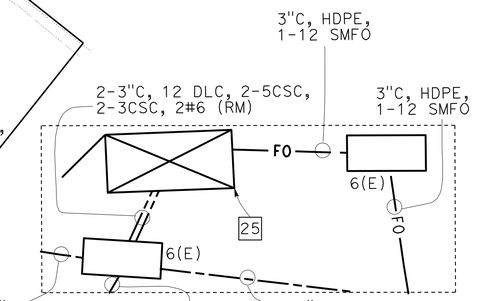

DETAIL B
NO SCALE

FIBER OPTIC SYSTEM (CITY)
RAMP METERING SYSTEM (LOCATION 1 AND 2)
MODIFY LIGHTING AND SIGN ILLUMINATION
FIBER OPTIC SYSTEM

SCALE: 1" = 50'

APPROVED FOR ELECTRICAL WORK ONLY

E-7

STATE OF CALIFORNIA - DEPARTMENT OF TRANSPORTATION
Caltrans 06-ELECTRICAL DESIGN

FUNCTIONAL SUPERVISOR: ALI BAKHDOUD
CALCULATED-DESIGNED BY: HASHIM KHALID
CHECKED BY: OMAR MENDOZA
REVISED BY
DATE REVISED

LAST REVISION 12-08-11
DATE PLOTTED => 30-MAR-2012
TIME PLOTTED => 11:25

Dist	COUNTY	ROUTE	POST MILES TOTAL PROJECT	SHEET No.	TOTAL SHEETS
10	SJ	4,99	R19.5/R20.1, 15.0/18.6	832	1414

REGISTERED ELECTRICAL ENGINEER 12-07-11 DATE

3-26-12
PLANS APPROVAL DATE

REGISTERED PROFESSIONAL ENGINEER HASHIM KHALID No. 18054 Exp. 6/30/13 ELECTRICAL STATE OF CALIFORNIA

THE STATE OF CALIFORNIA OR ITS OFFICERS OR AGENTS SHALL NOT BE RESPONSIBLE FOR THE ACCURACY OR COMPLETENESS OF SCANNED COPIES OF THIS PLAN SHEET.

NOTES:

1. FOR NOTES AND SCHEDULES, SEE SHEET E-1.
2. FOR ACCURATE RIGHT OF WAY DATA, CONTACT RIGHT OF WAY ENGINEERING AT THE DISTRICT OFFICE.

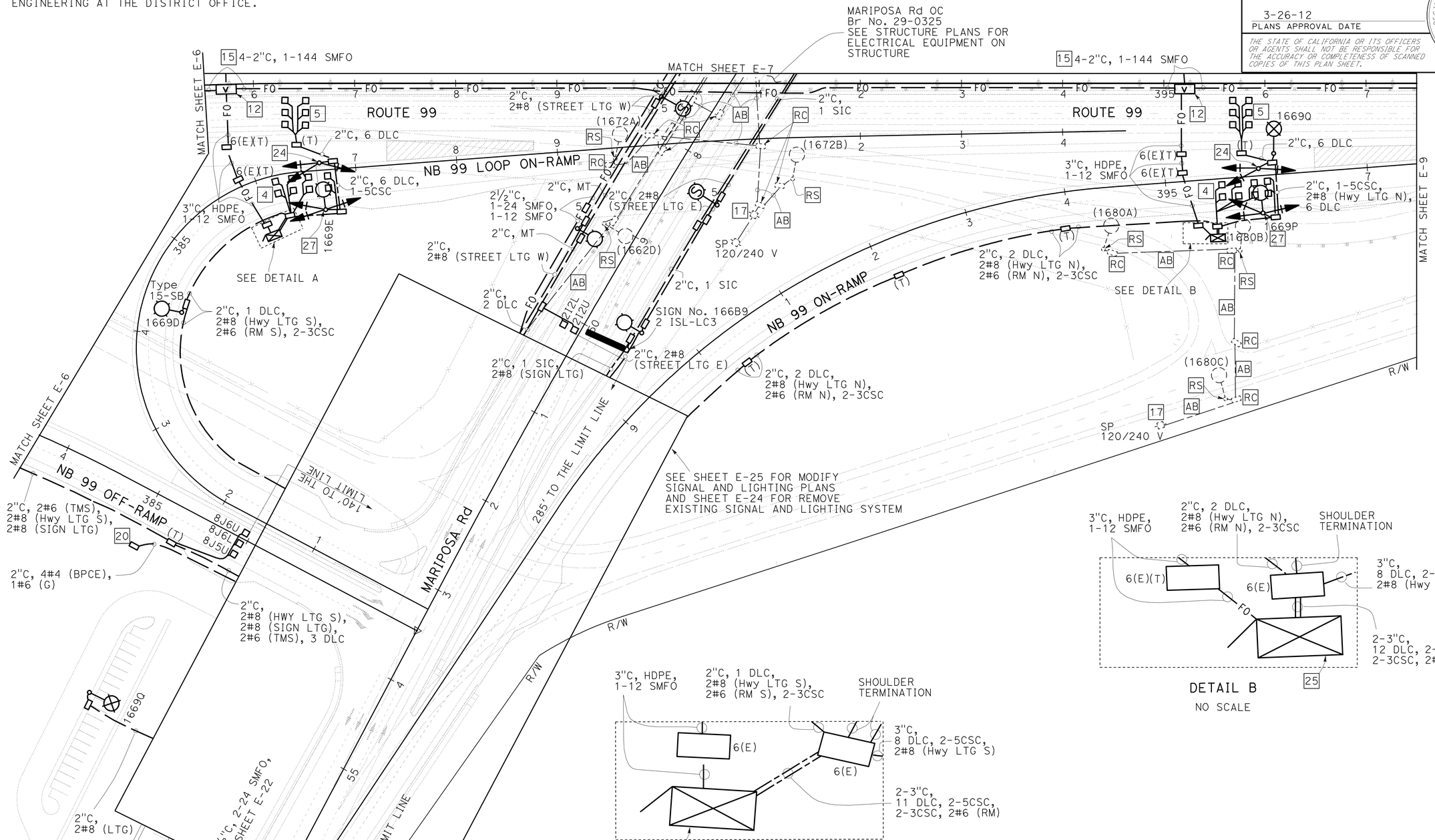

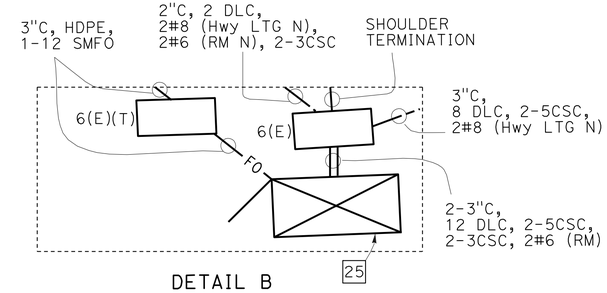

DETAIL B
NO SCALE

DETAIL A
NO SCALE

FIBER OPTIC SYSTEM (CITY) ELECTRIC SERVICE (IRRIGATION) RAMP METERING SYSTEM (LOCATION 3 AND 4) MODIFY LIGHTING AND SIGN ILLUMINATION FIBER OPTIC SYSTEM

APPROVED FOR ELECTRICAL WORK ONLY

SCALE: 1" = 50'

E-8

STATE OF CALIFORNIA - DEPARTMENT OF TRANSPORTATION
Caltrans 06-ELECTRICAL DESIGN

FUNCTIONAL SUPERVISOR: ALI BAKHDOUD
CALCULATED-DESIGNED BY: HASHIM KHALID
CHECKED BY: OMAR MENDOZA
REVISED BY / DATE REVISED

LAST REVISION 12-08-11
DATE PLOTTED => 30-MAR-2012
TIME PLOTTED => 11:30

Dist	COUNTY	ROUTE	POST MILES TOTAL PROJECT	SHEET No.	TOTAL SHEETS
10	SJ	4,99	R19.5/R20.1, 15.0/18.6	833	1414

REGISTERED ELECTRICAL ENGINEER 12-07-11 DATE

3-26-12
PLANS APPROVAL DATE

REGISTERED PROFESSIONAL ENGINEER HASHIM KHALID No. 18054 Exp. 6/30/13 ELECTRICAL STATE OF CALIFORNIA

THE STATE OF CALIFORNIA OR ITS OFFICERS OR AGENTS SHALL NOT BE RESPONSIBLE FOR THE ACCURACY OR COMPLETENESS OF SCANNED COPIES OF THIS PLAN SHEET.

NOTES:

1. FOR NOTES AND SCHEDULES, SEE SHEET E-1.
2. FOR ACCURATE RIGHT OF WAY DATA, CONTACT RIGHT OF WAY ENGINEERING AT THE DISTRICT OFFICE.

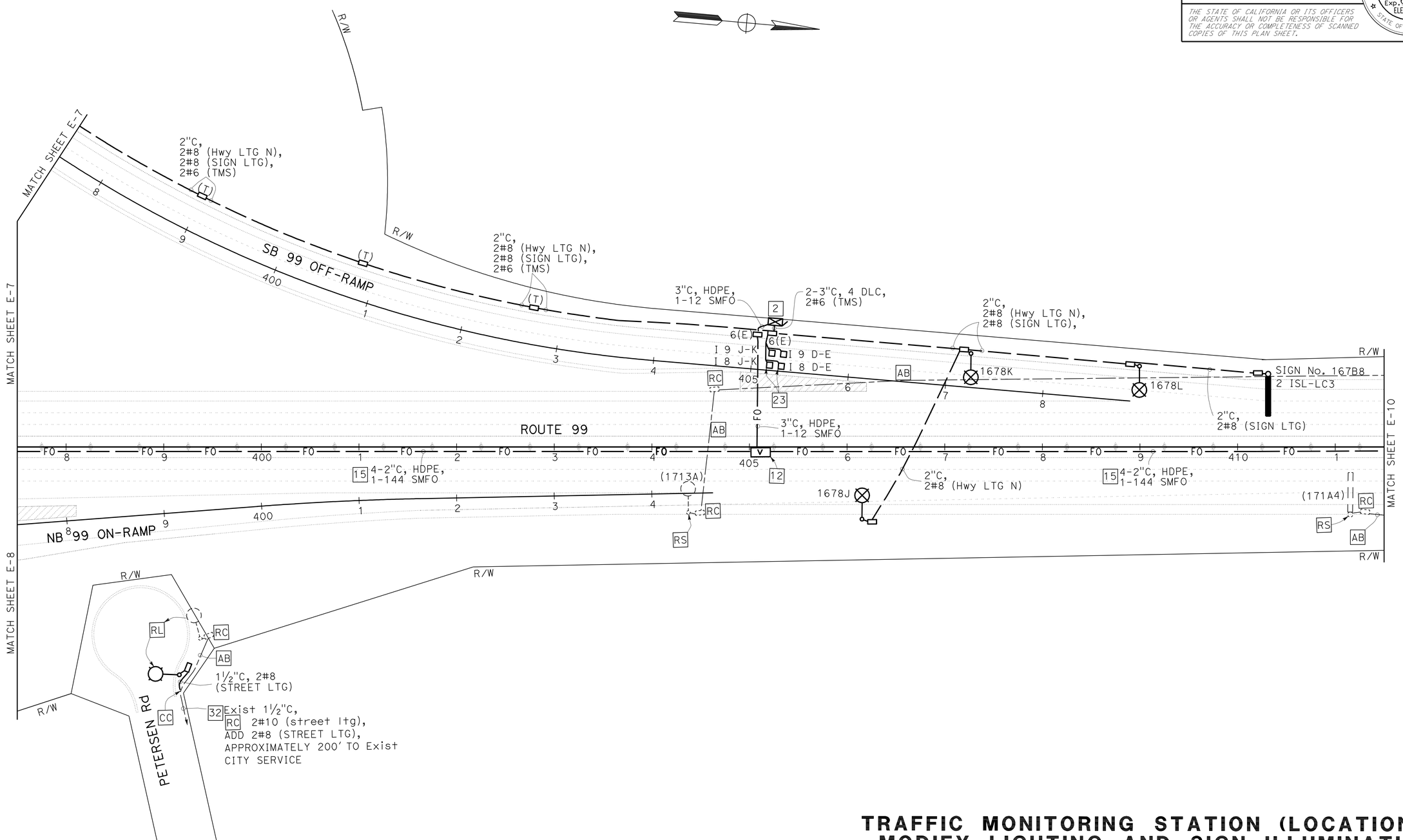

TRAFFIC MONITORING STATION (LOCATION 2) MODIFY LIGHTING AND SIGN ILLUMINATION FIBER OPTIC SYSTEM

SCALE: 1" = 50'

E-9

APPROVED FOR ELECTRICAL WORK ONLY

STATE OF CALIFORNIA - DEPARTMENT OF TRANSPORTATION
Caltrans® 06-ELECTRICAL DESIGN

FUNCTIONAL SUPERVISOR: ALI BAKHDOUD
CALCULATED-DESIGNED BY: OMAR MENDOZA
CHECKED BY: HASHIM KHALID
REVISED BY
DATE REVISED

LAST REVISION 12-08-11
DATE PLOTTED => 28-MAR-2012
TIME PLOTTED => 13:28

Dist	COUNTY	ROUTE	POST MILES TOTAL PROJECT	SHEET No.	TOTAL SHEETS
10	SJ	4,99	R19.5/R20.1, 15.0/18.6	834	1414

REGISTERED ELECTRICAL ENGINEER 12-07-11 DATE

3-26-12
PLANS APPROVAL DATE

REGISTERED PROFESSIONAL ENGINEER HASHIM KHALID No. 18054 Exp. 6/30/13 ELECTRICAL STATE OF CALIFORNIA

THE STATE OF CALIFORNIA OR ITS OFFICERS OR AGENTS SHALL NOT BE RESPONSIBLE FOR THE ACCURACY OR COMPLETENESS OF SCANNED COPIES OF THIS PLAN SHEET.

NOTES:

1. FOR NOTES AND SCHEDULES, SEE SHEET E-1.
2. FOR ACCURATE RIGHT OF WAY DATA, CONTACT RIGHT OF WAY ENGINEERING AT THE DISTRICT OFFICE.

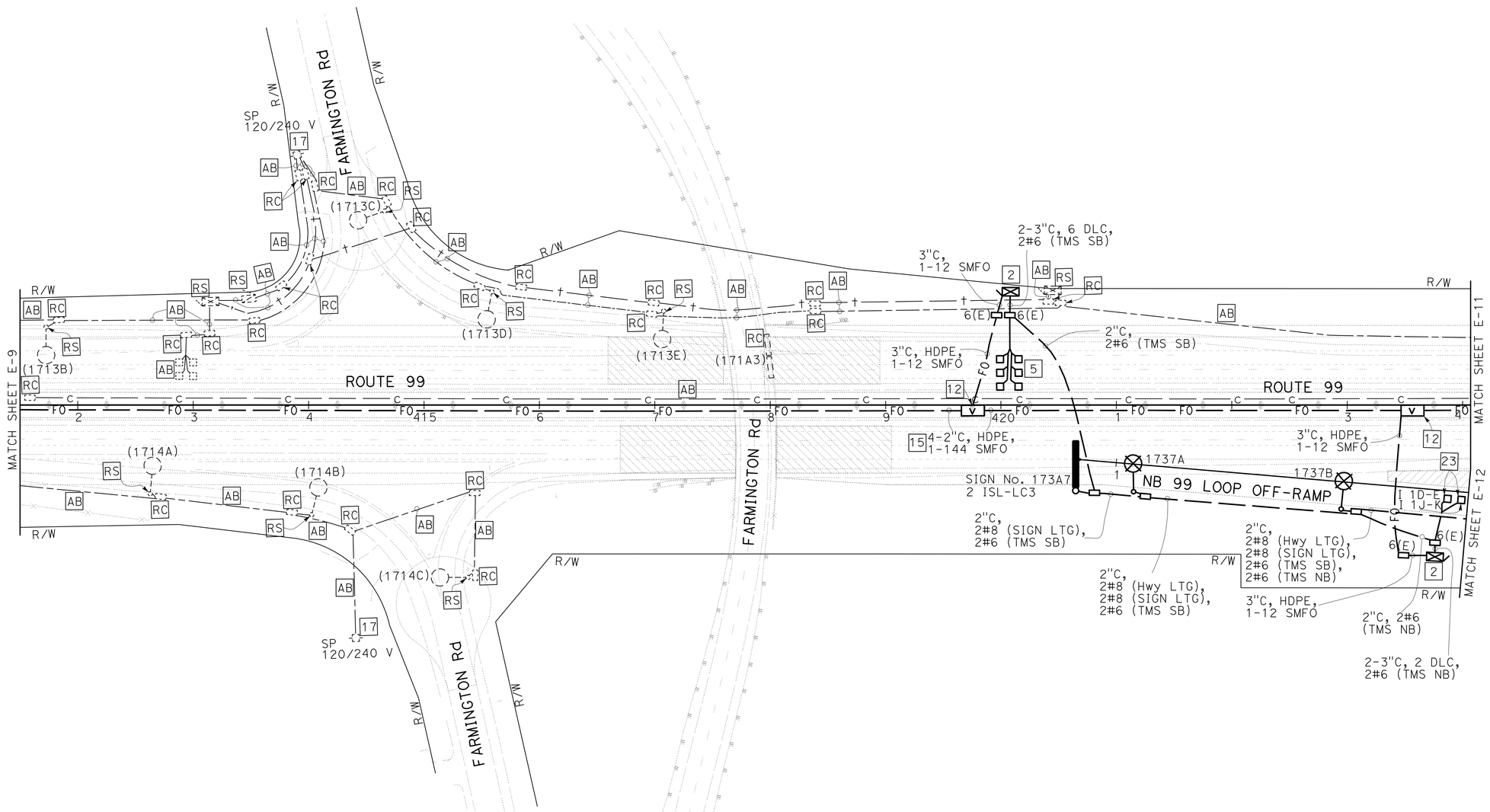

TRAFFIC MONITORING STATION (LOCATION 3 AND 4) MODIFY LIGHTING AND SIGN ILLUMINATION FIBER OPTIC SYSTEM

SCALE: 1" = 50'

E-10

APPROVED FOR ELECTRICAL WORK ONLY

STATE OF CALIFORNIA - DEPARTMENT OF TRANSPORTATION
Caltrans 06-ELECTRICAL DESIGN

FUNCTIONAL SUPERVISOR: ALI BAKHDOUD
CALCULATED-DESIGNED BY: HASHIM KHALID
CHECKED BY: OMAR MENDOZA
REVISED BY
DATE REVISED

LAST REVISION 12-08-11
DATE PLOTTED => 30-MAR-2012
TIME PLOTTED => 11:25

Dist	COUNTY	ROUTE	POST MILES TOTAL PROJECT	SHEET No.	TOTAL SHEETS
10	SJ	4,99	R19.5/R20.1, 15.0/18.6	835	1414

REGISTERED ELECTRICAL ENGINEER 12-07-11 DATE

3-26-12
PLANS APPROVAL DATE

REGISTERED PROFESSIONAL ENGINEER HASHIM KHALID No. 18054 Exp. 6/30/13 ELECTRICAL STATE OF CALIFORNIA

THE STATE OF CALIFORNIA OR ITS OFFICERS OR AGENTS SHALL NOT BE RESPONSIBLE FOR THE ACCURACY OR COMPLETENESS OF SCANNED COPIES OF THIS PLAN SHEET.

NOTES:

1. FOR NOTES AND SCHEDULES, SEE SHEET E-1.
2. NOTES FOR THIS SHEET ONLY.
   - Ⓐ FOR CONTINUATION, SEE SHEET EE1-5.
   - Ⓑ 4"C, SIZE OF CONDUCTORS AND DEPTH PER UTILITY REQUIREMENTS.
3. FOR ACCURATE RIGHT OF WAY DATA, CONTACT RIGHT OF WAY ENGINEERING AT THE DISTRICT OFFICE.

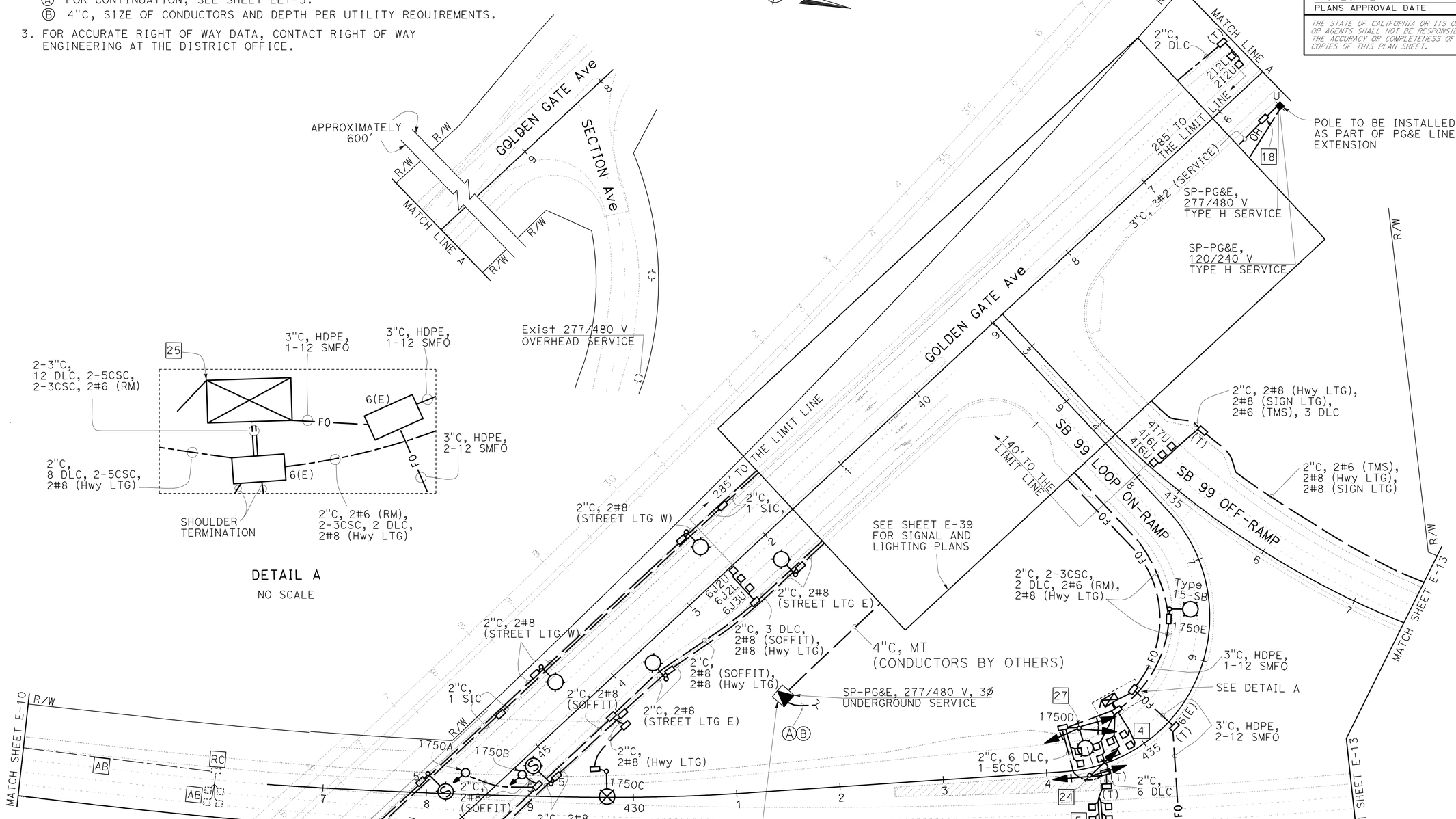

RAMP METERING SYSTEM (LOCATION 5)
MODIFY LIGHTING AND SIGN ILLUMINATION
FIBER OPTIC SYSTEM

SCALE: 1" = 50'

E-11

APPROVED FOR ELECTRICAL WORK ONLY

STATE OF CALIFORNIA - DEPARTMENT OF TRANSPORTATION
Caltrans 06-ELECTRICAL DESIGN

FUNCTIONAL SUPERVISOR: ALI BAKHDOUD
CALCULATED-DESIGNED BY: HASHIM KHALID
CHECKED BY: OMAR MENDOZA
REVISED BY
DATE REVISED

LAST REVISION DATE PLOTTED => 28-MAR-2012
12-08-11 TIME PLOTTED => 13:28

BORDER LAST REVISED 7/2/2010
USERNAME => s121614
DGN FILE => a3a100ua011.dgn
RELATIVE BORDER SCALE IS IN INCHES 0 1 2 3
UNIT 1515
PROJECT NUMBER & PHASE 10000004091

Dist	COUNTY	ROUTE	POST MILES TOTAL PROJECT	SHEET No.	TOTAL SHEETS
10	SJ	4,99	R19.5/R20.1, 15.0/18.6	836	1414

REGISTERED ELECTRICAL ENGINEER 12-07-11 DATE

3-26-12
PLANS APPROVAL DATE

REGISTERED PROFESSIONAL ENGINEER HASHIM KHALID No. 18054 Exp. 6/30/13 ELECTRICAL STATE OF CALIFORNIA

THE STATE OF CALIFORNIA OR ITS OFFICERS OR AGENTS SHALL NOT BE RESPONSIBLE FOR THE ACCURACY OR COMPLETENESS OF SCANNED COPIES OF THIS PLAN SHEET.

NOTES:

1. FOR NOTES AND SCHEDULES, SEE SHEET E-1.
2. FOR ACCURATE RIGHT OF WAY DATA, CONTACT RIGHT OF WAY ENGINEERING AT THE DISTRICT OFFICE.

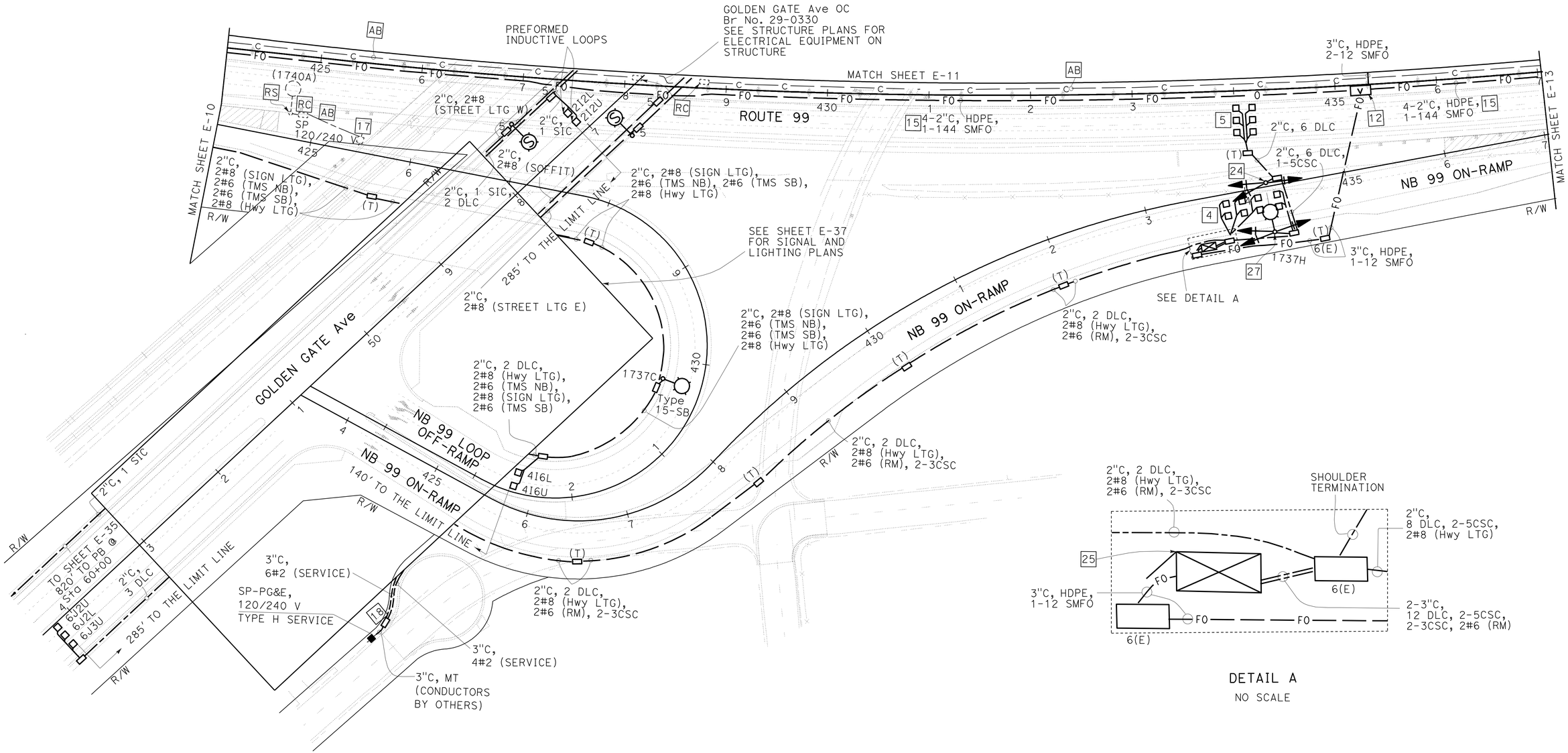

DETAIL A
NO SCALE

RAMP METERING SYSTEM (LOCATION 6) MODIFY LIGHTING AND SIGN ILLUMINATION FIBER OPTIC SYSTEM

SCALE: 1" = 50'

E-12

APPROVED FOR ELECTRICAL WORK ONLY

STATE OF CALIFORNIA - DEPARTMENT OF TRANSPORTATION
Caltrans 06-ELECTRICAL DESIGN

FUNCTIONAL SUPERVISOR: ALI BAKHDOUD
CALCULATED-DESIGNED BY: OMAR MENDOZA
CHECKED BY: HASHIM KHALID
REVISED BY / DATE REVISED

LAST REVISION 12-08-11 | DATE PLOTTED => 02-APR-2012 | TIME PLOTTED => 07:52

Dist	COUNTY	ROUTE	POST MILES TOTAL PROJECT	SHEET No.	TOTAL SHEETS
10	SJ	4,99	R19.5/R20.1, 15.0/18.6	837	1414

REGISTERED ELECTRICAL ENGINEER 12-07-11 DATE

3-26-12
PLANS APPROVAL DATE

REGISTERED PROFESSIONAL ENGINEER HASHIM KHALID No. 18054 Exp. 6/30/13 ELECTRICAL STATE OF CALIFORNIA

THE STATE OF CALIFORNIA OR ITS OFFICERS OR AGENTS SHALL NOT BE RESPONSIBLE FOR THE ACCURACY OR COMPLETENESS OF SCANNED COPIES OF THIS PLAN SHEET.

NOTES:

1. FOR NOTES AND SCHEDULES, SEE SHEET E-1.
2. FOR ACCURATE RIGHT OF WAY DATA, CONTACT RIGHT OF WAY ENGINEERING AT THE DISTRICT OFFICE.

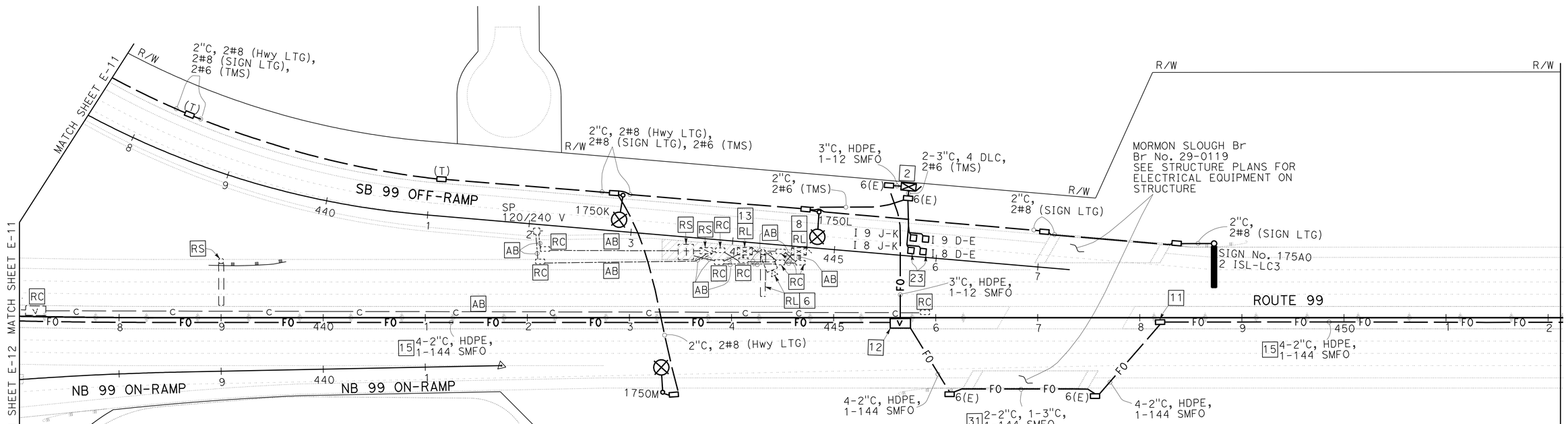

TRAFFIC MONITORING STATION (LOCATION 5)
MODIFY LIGHTING AND SIGN ILLUMINATION
MODIFY CLOSED CIRCUIT TELEVISION SYSTEM
MODIFY CHANGEABLE MESSAGE SIGN SYSTEM
FIBER OPTIC SYSTEM

SCALE: 1" = 50'

E-13

APPROVED FOR ELECTRICAL WORK ONLY

STATE OF CALIFORNIA - DEPARTMENT OF TRANSPORTATION
Caltrans 06-ELECTRICAL DESIGN

FUNCTIONAL SUPERVISOR: ALI BAKHDOUD
CALCULATED-DESIGNED BY: OMAR MENDOZA
CHECKED BY: HASHIM KHALID
REVISED BY / DATE REVISED

LAST REVISION 12-08-11 | DATE PLOTTED => 28-MAR-2012 | TIME PLOTTED => 13:28

Dist	COUNTY	ROUTE	POST MILES TOTAL PROJECT	SHEET No.	TOTAL SHEETS
10	SJ	4,99	R19.5/R20.1, 15.0/18.6	838	1414

REGISTERED ELECTRICAL ENGINEER 12-07-11 DATE

3-26-12
PLANS APPROVAL DATE

REGISTERED PROFESSIONAL ENGINEER HASHIM KHALID No. 18054 Exp. 6/30/13 ELECTRICAL STATE OF CALIFORNIA

THE STATE OF CALIFORNIA OR ITS OFFICERS OR AGENTS SHALL NOT BE RESPONSIBLE FOR THE ACCURACY OR COMPLETENESS OF SCANNED COPIES OF THIS PLAN SHEET.

NOTES:

1. FOR NOTES AND SCHEDULES, SEE SHEET E-1.
2. FOR ACCURATE RIGHT OF WAY DATA, CONTACT RIGHT OF WAY ENGINEERING AT THE DISTRICT OFFICE.

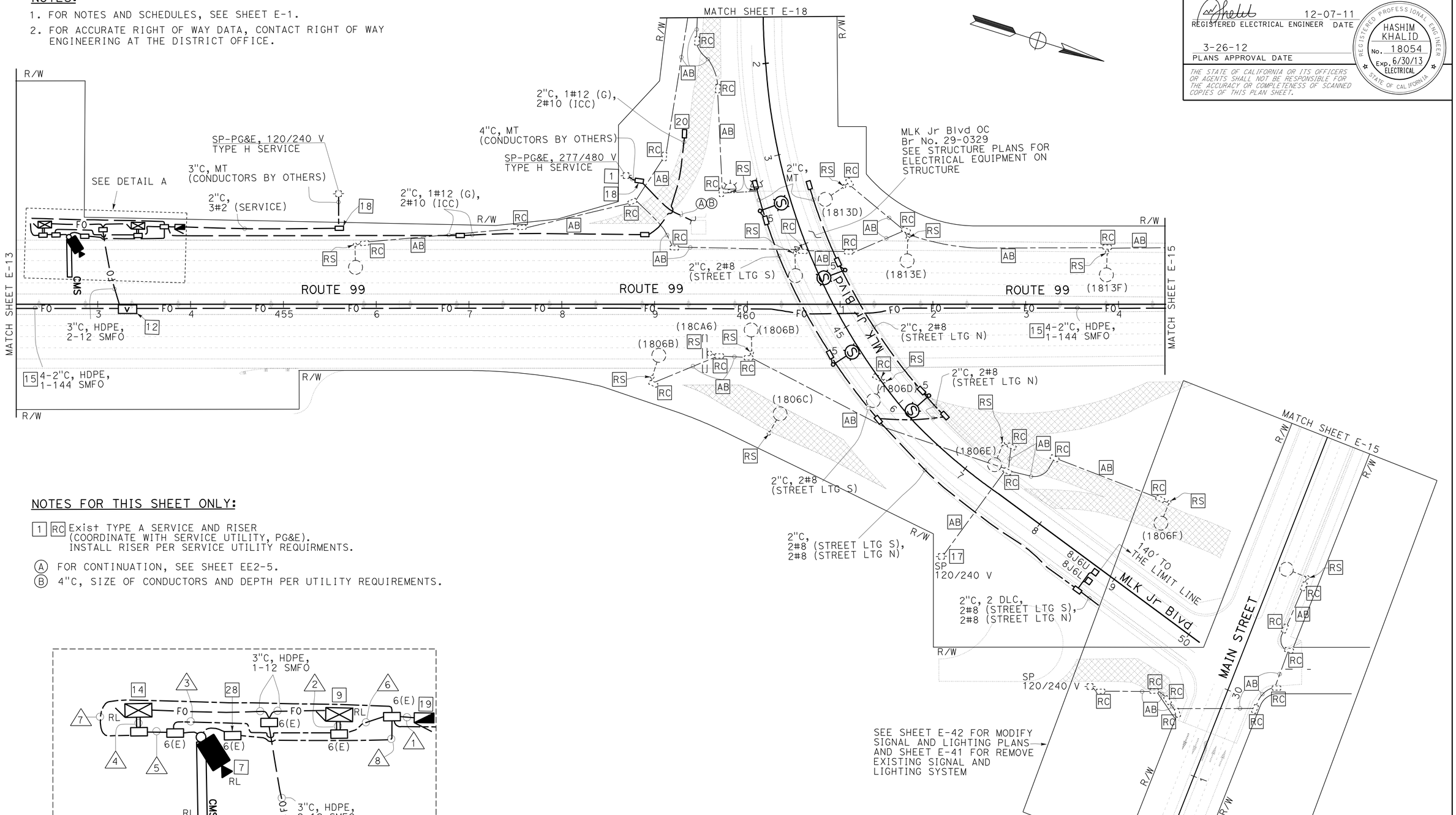

NOTES FOR THIS SHEET ONLY:

1 RC Exist TYPE A SERVICE AND RISER (COORDINATE WITH SERVICE UTILITY, PG&E). INSTALL RISER PER SERVICE UTILITY REQUIRMENTS.

(A) FOR CONTINUATION, SEE SHEET EE2-5.

(B) 4"C, SIZE OF CONDUCTORS AND DEPTH PER UTILITY REQUIREMENTS.

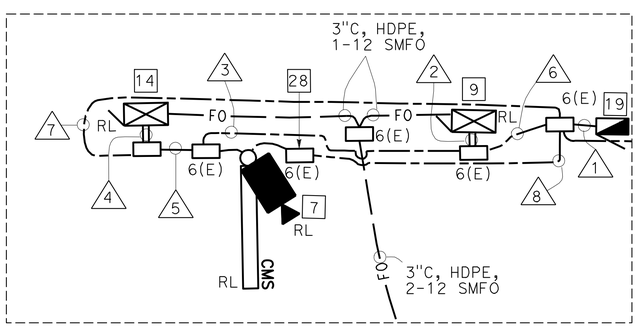

DETAIL A

NO SCALE

ELECTRIC SERVICE (IRRIGATION)
MODIFY CHANGEABLE MESSAGE SIGN SYSTEM
MODIFY CLOSED CIRCUIT TELEVISION SYSTEM
MODIFY LIGHTING AND SIGN ILLUMINATION
FIBER OPTIC SYSTEM

SCALE: 1" = 20'

E-14

APPROVED FOR ELECTRICAL WORK ONLY

STATE OF CALIFORNIA - DEPARTMENT OF TRANSPORTATION
Caltrans 06-ELECTRICAL DESIGN

FUNCTIONAL SUPERVISOR: ALI BAKHDOUD
CALCULATED-DESIGNED BY: OMAR MENDOZA
CHECKED BY: HASHIM KHALID
REVISED BY
DATE REVISED

LAST REVISION 12-08-11
DATE PLOTTED => 30-MAR-2012
TIME PLOTTED => 11:25

Dist	COUNTY	ROUTE	POST MILES TOTAL PROJECT	SHEET No.	TOTAL SHEETS
10	SJ	4,99	R19.5/R20.1, 15.0/18.6	839	1414

REGISTERED ELECTRICAL ENGINEER 12-07-11 DATE

3-26-12
PLANS APPROVAL DATE

REGISTERED PROFESSIONAL ENGINEER HASHIM KHALID No. 18054 Exp. 6/30/13 ELECTRICAL STATE OF CALIFORNIA

THE STATE OF CALIFORNIA OR ITS OFFICERS OR AGENTS SHALL NOT BE RESPONSIBLE FOR THE ACCURACY OR COMPLETENESS OF SCANNED COPIES OF THIS PLAN SHEET.

NOTES:

1. FOR NOTES AND SCHEDULES, SEE SHEET E-1.
2. FOR ACCURATE RIGHT OF WAY DATA, CONTACT RIGHT OF WAY ENGINEERING AT THE DISTRICT OFFICE.

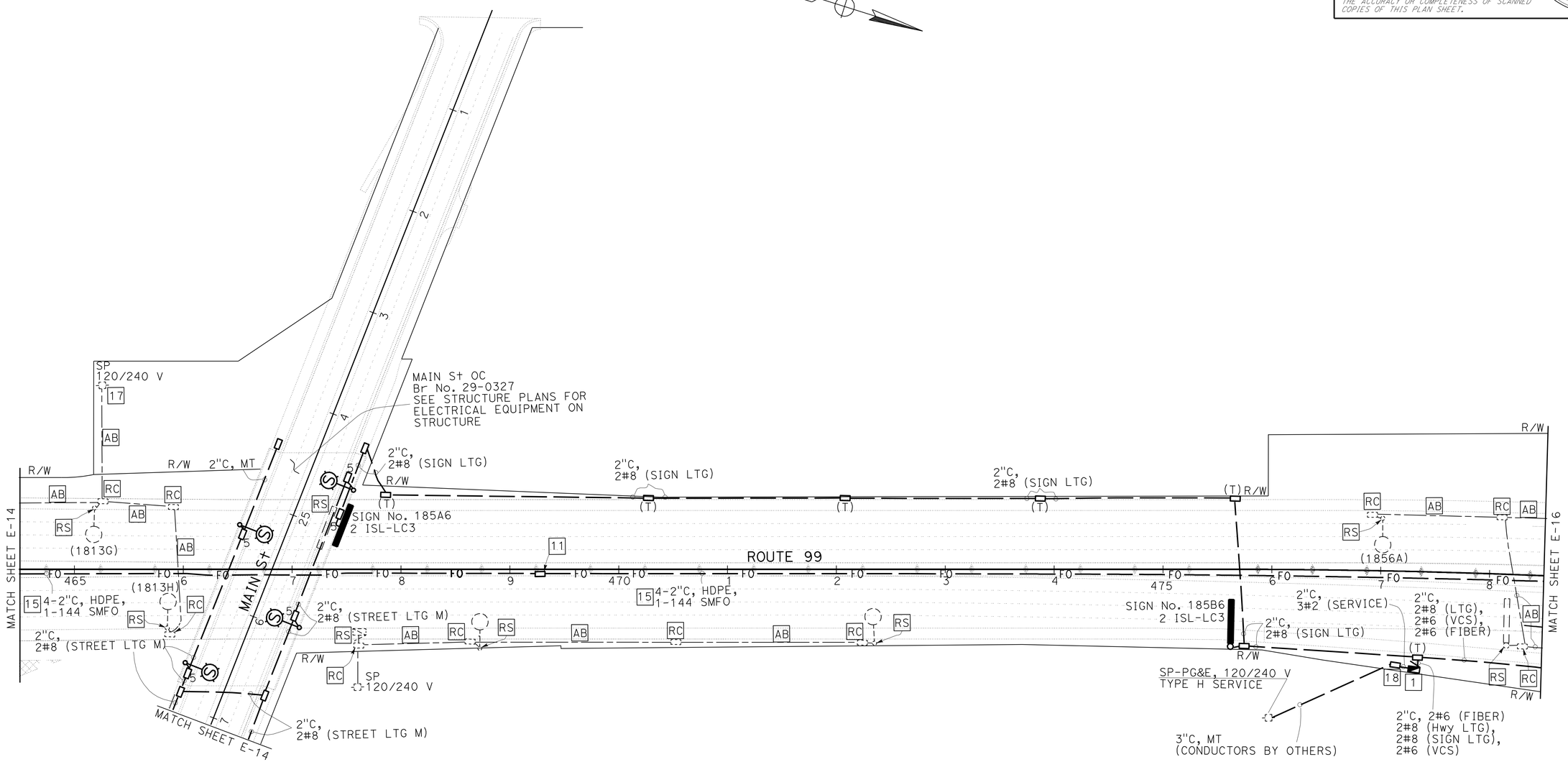

MODIFY LIGHTING AND SIGN ILLUMINATION FIBER OPTIC SYSTEM

SCALE: 1" = 50'

E-15

APPROVED FOR ELECTRICAL WORK ONLY

STATE OF CALIFORNIA - DEPARTMENT OF TRANSPORTATION
Caltrans 06-ELECTRICAL DESIGN

FUNCTIONAL SUPERVISOR: ALI BAKHDOUD
CALCULATED-DESIGNED BY: HASHIM KHALID
CHECKED BY: OMAR MENDOZA
REVISED BY
DATE REVISED

LAST REVISION 12-08-11
DATE PLOTTED => 28-MAR-2012
TIME PLOTTED => 13:28

Dist	COUNTY	ROUTE	POST MILES TOTAL PROJECT	SHEET No.	TOTAL SHEETS
10	SJ	4,99	R19.5/R20.1, 15.0/18.6	840	1414

REGISTERED ELECTRICAL ENGINEER 12-07-11 DATE

3-26-12
PLANS APPROVAL DATE

REGISTERED PROFESSIONAL ENGINEER HASHIM KHALID No. 18054 Exp. 6/30/13 ELECTRICAL STATE OF CALIFORNIA

THE STATE OF CALIFORNIA OR ITS OFFICERS OR AGENTS SHALL NOT BE RESPONSIBLE FOR THE ACCURACY OR COMPLETENESS OF SCANNED COPIES OF THIS PLAN SHEET.

NOTES:

1. FOR NOTES AND SCHEDULES, SEE SHEET E-1.
2. FOR ACCURATE RIGHT OF WAY DATA, CONTACT RIGHT OF WAY ENGINEERING AT THE DISTRICT OFFICE.

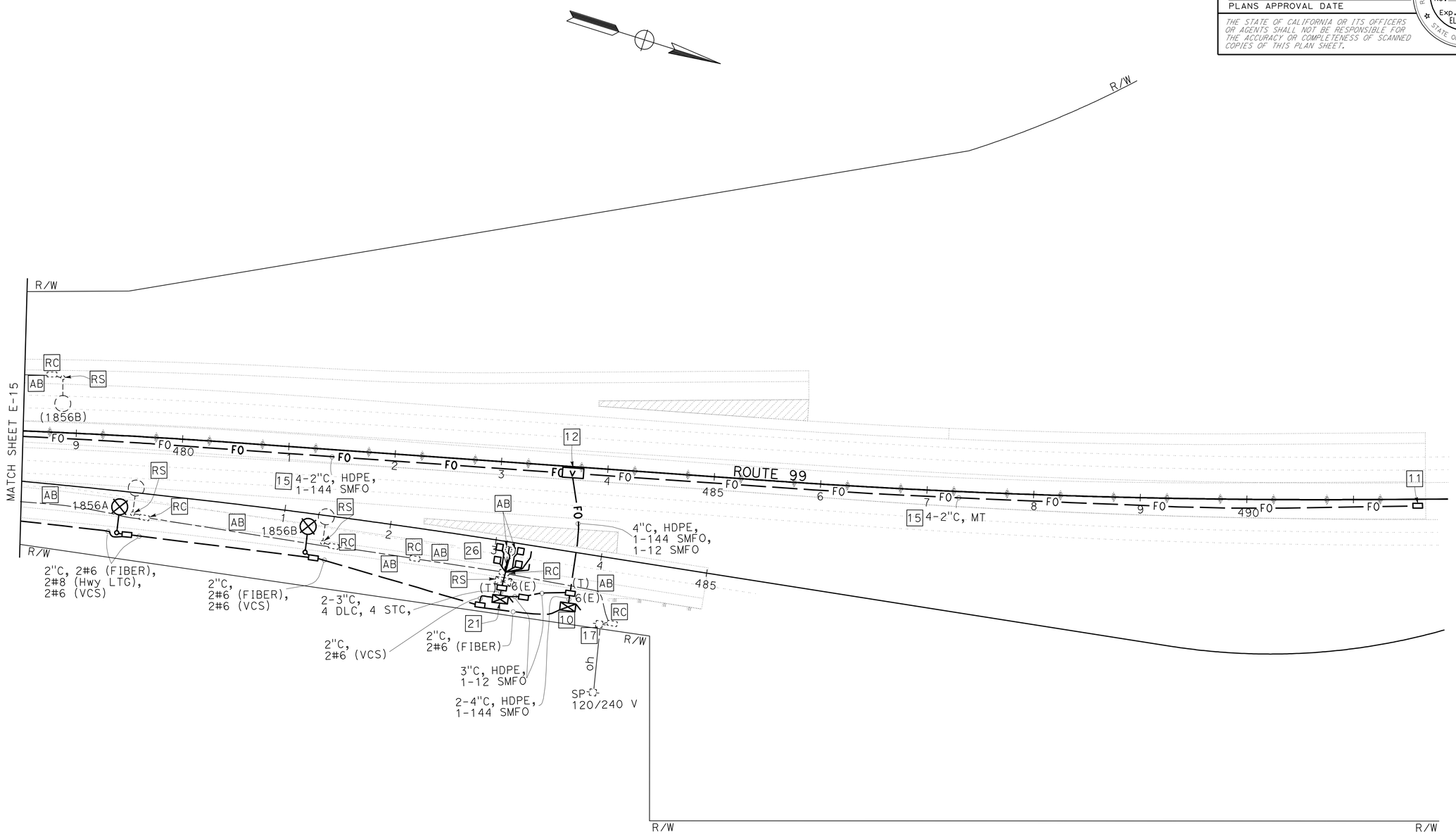

VEHICLE CLASSIFICATION STATION
MODIFY LIGHTING AND SIGN ILLUMINATION
FIBER OPTIC SYSTEM

SCALE: 1" = 50'

E-16

APPROVED FOR ELECTRICAL WORK ONLY

STATE OF CALIFORNIA - DEPARTMENT OF TRANSPORTATION
Caltrans 06-ELECTRICAL DESIGN

FUNCTIONAL SUPERVISOR: ALI BAKHDOUD
CALCULATED-DESIGNED BY: HASHIM KHALID
CHECKED BY: OMAR MENDOZA
REVISED BY
DATE REVISED

LAST REVISION 12-08-11
DATE PLOTTED => 28-MAR-2012
TIME PLOTTED => 13:29

Dist	COUNTY	ROUTE	POST MILES TOTAL PROJECT	SHEET No.	TOTAL SHEETS
10	SJ	4,99	R19.5/R20.1, 15.0/18.6	841	1414

REGISTERED ELECTRICAL ENGINEER 12-07-11 DATE

3-26-12
PLANS APPROVAL DATE

REGISTERED PROFESSIONAL ENGINEER HASHIM KHALID No. 18054 Exp. 6/30/13 ELECTRICAL STATE OF CALIFORNIA

THE STATE OF CALIFORNIA OR ITS OFFICERS OR AGENTS SHALL NOT BE RESPONSIBLE FOR THE ACCURACY OR COMPLETENESS OF SCANNED COPIES OF THIS PLAN SHEET.

NOTES:

1. FOR NOTES AND SCHEDULES, SEE SHEET E-1.
2. FOR ACCURATE RIGHT OF WAY DATA, CONTACT RIGHT OF WAY ENGINEERING AT THE DISTRICT OFFICE.

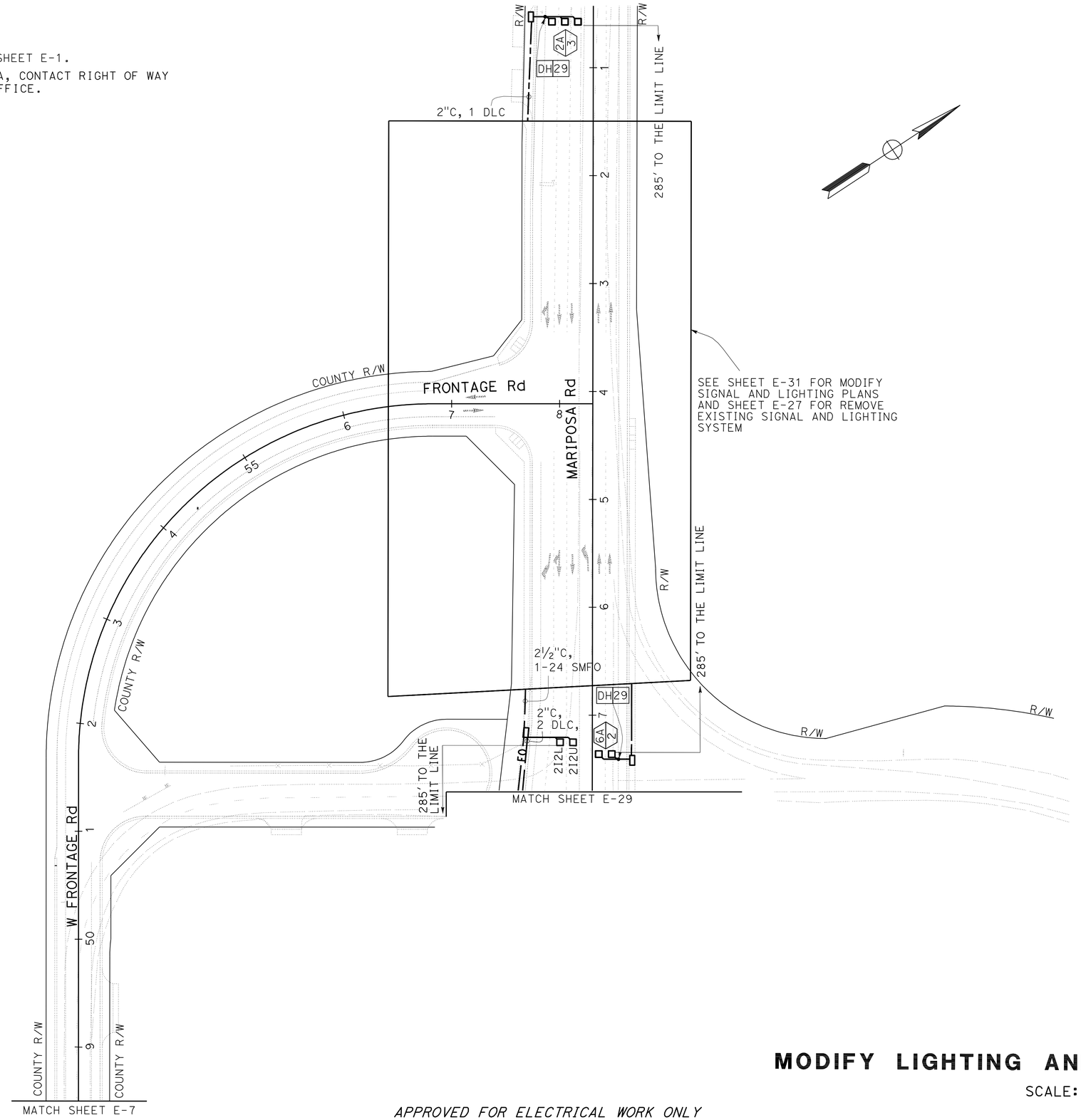

MODIFY LIGHTING AND SIGN ILLUMINATION

SCALE: 1" = 50'

E-17

APPROVED FOR ELECTRICAL WORK ONLY

STATE OF CALIFORNIA - DEPARTMENT OF TRANSPORTATION
Caltrans® 06-ELECTRICAL DESIGN

FUNCTIONAL SUPERVISOR: ALI BAKHDOUD
CALCULATED-DESIGNED BY: HASHIM KHALID
CHECKED BY: OMAR MENDOZA
REVISED BY
DATE REVISED

LAST REVISION 12-08-11
DATE PLOTTED => 30-MAR-2012
TIME PLOTTED => 11:26

Dist	COUNTY	ROUTE	POST MILES TOTAL PROJECT	SHEET No.	TOTAL SHEETS
10	SJ	4,99	R19.5/R20.1, 15.0/18.6	842	1414

REGISTERED ELECTRICAL ENGINEER 12-07-11 DATE

3-26-12
PLANS APPROVAL DATE

REGISTERED PROFESSIONAL ENGINEER
HASHIM KHALID
No. 18054
Exp. 6/30/13
ELECTRICAL
STATE OF CALIFORNIA

THE STATE OF CALIFORNIA OR ITS OFFICERS OR AGENTS SHALL NOT BE RESPONSIBLE FOR THE ACCURACY OR COMPLETENESS OF SCANNED COPIES OF THIS PLAN SHEET.

NOTES:

1. FOR NOTES AND SCHEDULES, SEE SHEET E-1.
2. FOR ACCURATE RIGHT OF WAY DATA, CONTACT RIGHT OF WAY ENGINEERING AT THE DISTRICT OFFICE.

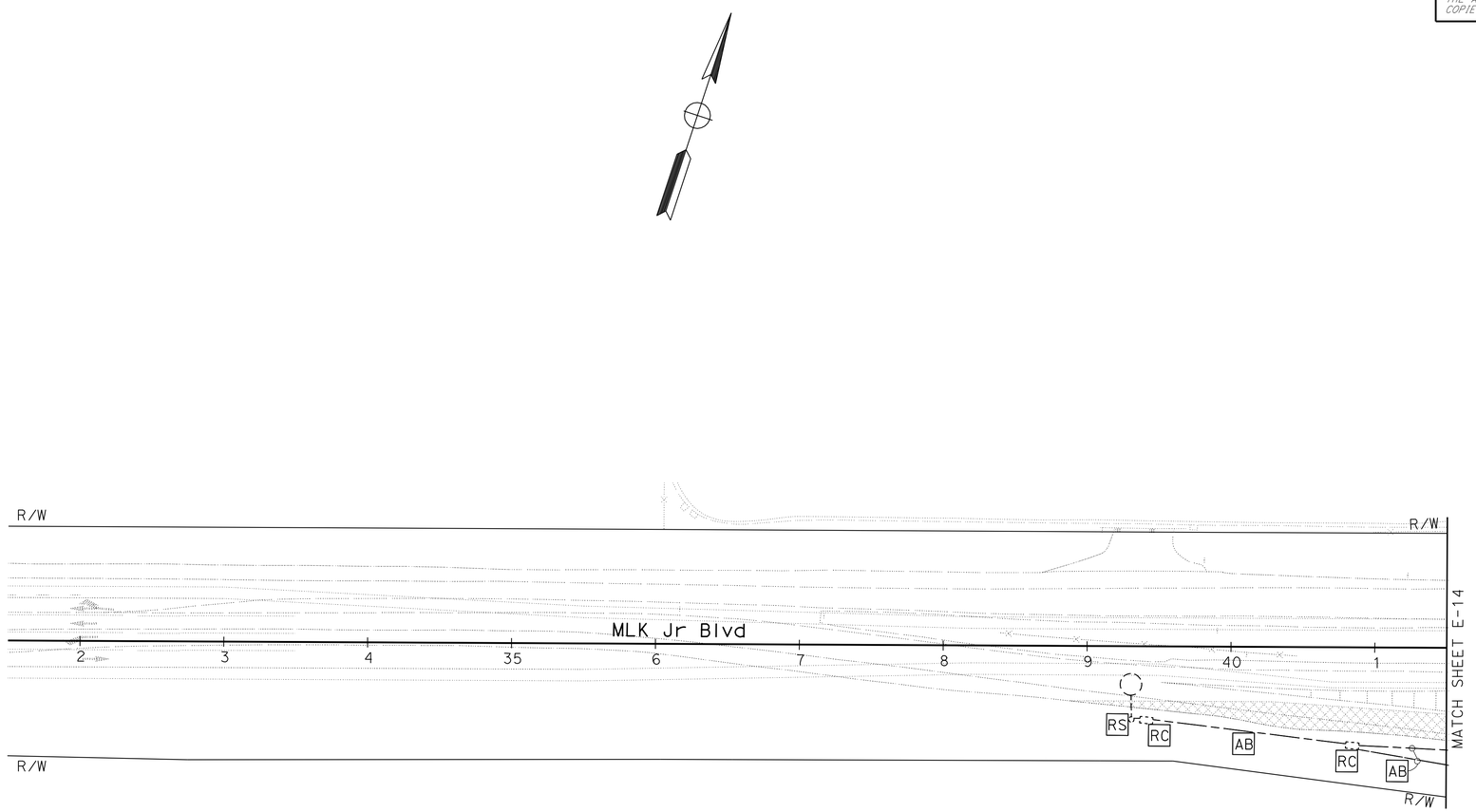

MODIFY LIGHTING AND SIGN ILLUMINATION

SCALE: 1" = 50'

E-18

APPROVED FOR ELECTRICAL WORK ONLY

STATE OF CALIFORNIA - DEPARTMENT OF TRANSPORTATION
Caltrans 06-ELECTRICAL DESIGN

FUNCTIONAL SUPERVISOR: ALI BAKHDOUD
CALCULATED-DESIGNED BY: HASHIM KHALID
CHECKED BY: OMAR MENDOZA
REVISED BY
DATE REVISED

LAST REVISION 12-08-11
DATE PLOTTED => 28-MAR-2012
TIME PLOTTED => 13:29

Dist	COUNTY	ROUTE	POST MILES TOTAL PROJECT	SHEET No.	TOTAL SHEETS
10	SJ	4,99	R19.5/R20.1, 15.0/18.6	843	1414

REGISTERED ELECTRICAL ENGINEER 12-07-11 DATE

3-26-12
PLANS APPROVAL DATE

REGISTERED PROFESSIONAL ENGINEER HASHIM KHALID No. 18054 Exp. 6/30/13 ELECTRICAL STATE OF CALIFORNIA

THE STATE OF CALIFORNIA OR ITS OFFICERS OR AGENTS SHALL NOT BE RESPONSIBLE FOR THE ACCURACY OR COMPLETENESS OF SCANNED COPIES OF THIS PLAN SHEET.

NOTES:

1. FOR NOTES AND SCHEDULES, SEE SHEET E-20.
2. FOR ACCURATE RIGHT OF WAY DATA, CONTACT RIGHT OF WAY ENGINEERING AT THE DISTRICT OFFICE.

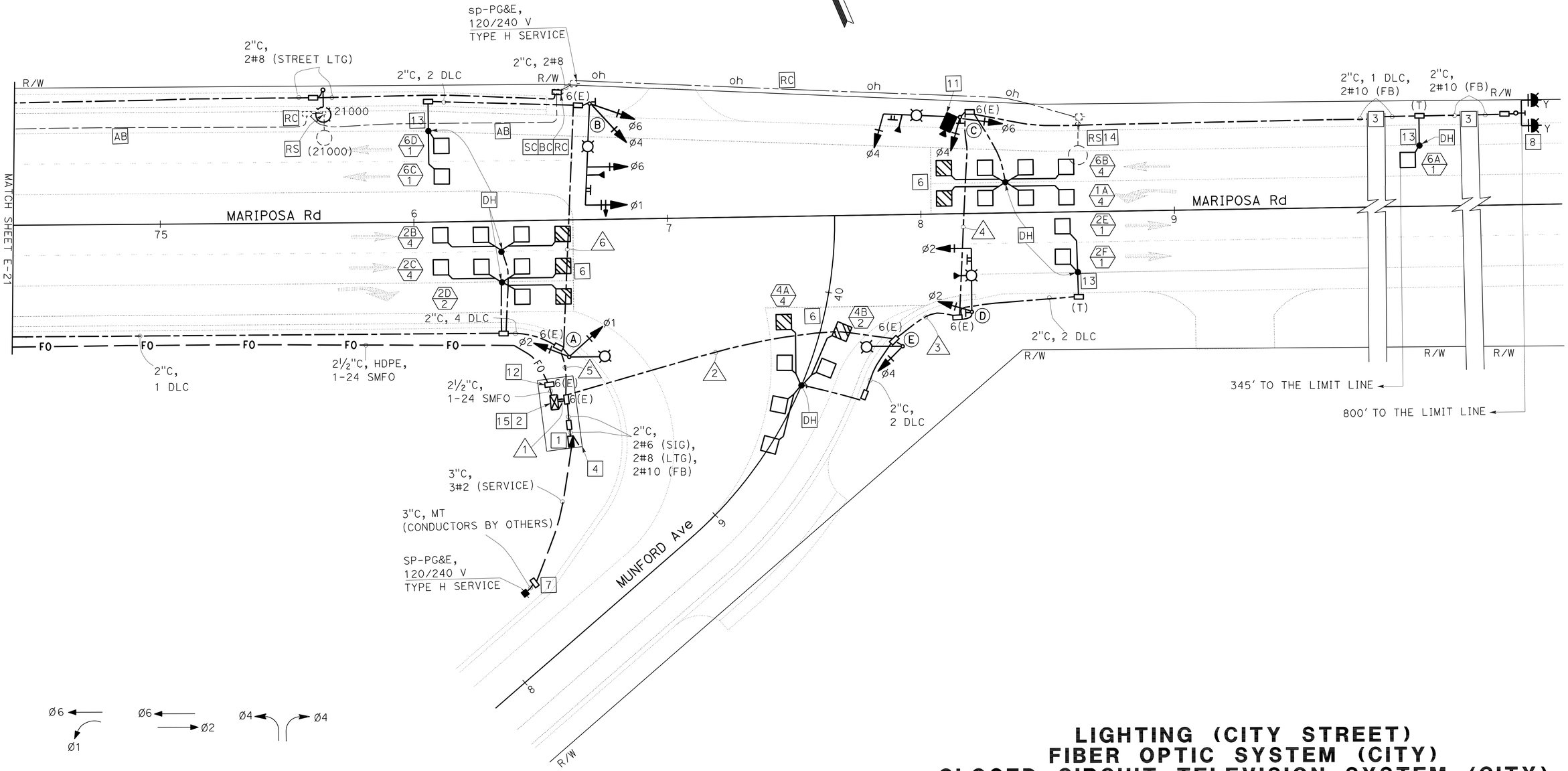

TRAFFIC PHASE DIAGRAM

STEADY DEMAND SEQUENCE →

LIGHTING (CITY STREET)
FIBER OPTIC SYSTEM (CITY)
CLOSED CIRCUIT TELEVISION SYSTEM (CITY)
EMERGENCY VEHICLE DETECTOR SYSTEM (CITY)
SIGNAL AND LIGHTING (CITY STREET LOCATON 1)

SCALE: 1" = 20'

E-19

APPROVED FOR ELECTRICAL WORK ONLY

STATE OF CALIFORNIA - DEPARTMENT OF TRANSPORTATION
Caltrans 06-ELECTRICAL DESIGN

FUNCTIONAL SUPERVISOR: ALI BAKHDOUD
CALCULATED-DESIGNED BY: HASHIM KHALID
CHECKED BY: OMAR MENDOZA
REVISED BY
DATE REVISED

LAST REVISION 12-08-11
DATE PLOTTED => 28-MAR-2012
TIME PLOTTED => 13:29

Dist	COUNTY	ROUTE	POST MILES TOTAL PROJECT	SHEET No.	TOTAL SHEETS
10	SJ	4,99	R19.5/R20.1, 15.0/18.6	844	1414

REGISTERED ELECTRICAL ENGINEER 12-07-11 DATE

3-26-12
PLANS APPROVAL DATE

REGISTERED PROFESSIONAL ENGINEER HASHIM KHALID No. 18054 Exp. 6/30/13 ELECTRICAL STATE OF CALIFORNIA

THE STATE OF CALIFORNIA OR ITS OFFICERS OR AGENTS SHALL NOT BE RESPONSIBLE FOR THE ACCURACY OR COMPLETENESS OF SCANNED COPIES OF THIS PLAN SHEET.

NOTES: (FOR SHEET E-19 AND E-20)

1 120/240 V, 1Ø, 3-WIRE, TYPE III-AF SERVICE EQUIPMENT ENCLOSURE WITH THE FOLLOWING CIRCUIT BREAKERS:

CITY SERVICE

AMPERES	VOLTS	POLES	NAMEPLATE	METER	PHOTOELECTRIC CONTROL TYPE
100	240	2	MAIN BREAKER	YES	—
50	120	1	TRAFFIC SIGNAL	YES	—
30	240	2	INTERSECTION LIGHTING	NO	V
15	120	1	LIGHTING CONTROL	NO	V
15	120	1	FLASHING BEACON	YES	—
20	120	1	SPARE	YES	—
—	—	6	SPACE	—	—

2 STATE-FURNISHED MODEL 2070N CONTROLLER ASSEMBLY. INSTALL STATE-FURNISHED 4-CHANNEL MULTIMODE PHASE SELECTOR AND HARNESS. REFER TO DETAILS A AND B ON SHEET E-48.

3 INSTALL No. 5(T) PULL BOXES AS NECESSARY TO MAINTAIN 200' MAXIMUM SPACING.

4 INSTALL CONCRETE PAD PER DETAIL B ON SHEET E-48.

5 REFER TO SIGN PLANS FOR SIGN DETAILS. INSTALL CITY STREET NAME SIGN PER DETAIL B ON SHEET E-61.

6 INSTALL INDUCTIVE LOOP DETECTORS PER DETAILS E1 AND E2 ON SHEET E-48.

7 PULL BOX PER UTILITY REQUIREMENTS.

8 TYPE 15-FBS AND FLASHING BEACON CONTROL ASSEMBLY. REFER TO SIGN PLANS FOR SIGN DETAILS.

9 NOT USED.

10 STATE-FURNISHED EVD PER DETAIL C ON SHEET E-48 AND POLE DETAIL SES-3.

11 STATE-FURNISHED CAMERA PER DETAIL A ON SHEET E-61 AND POLE DETAIL SES-3. INSTALLATION SHALL INCLUDE ALL MOUNTING HARDWARE, VIDEO, DATA, AND POWER CABLES, FIELD AND CENTRAL COMMUNICATION MODEMS (VIDEO/DATA) AND ASSOCIATED EQUIPMENT. CONTACT THE CITY OF STOCKTON TRAFFIC ENGINEERING AT (209) 937-8411 PRIOR TO CAMERA INSTALLATION.

12 PULL BOX PER DETAIL F ON SHEET E-48.

13 INSTALL A CONCRETE CAP AROUND THE HANDHOLE PER DETAIL D ON SHEET E-48.

14 RC LUMINAIRE ON UTILITY POLE, THE CONTRACTOR SHALL COORDINATE WITH SERVE UTILITY.

15 TERMINATE FIBER DROP IN LIU PER DETAIL G ON SHEET E-48. CONTACT THE CITY OF STOCKTON TRAFFIC ENGINEERING AT (209) 937-8411 PRIOR TO FIBER SPLICING.

SENSOR TABLE

CH	DET	LOOP DETECTORS	
1	1	1A	(4)
2		2A	(2)
3			
4		4A	(4)
1	2	2B	(4)
2		6A	(1)
3		4B (DELAY)	(2)
4			
1	3	2C	(4)
2		6B	(4)
3		2D (DELAY)	(2)
4			
1	4	2E (SAMPLER)	(1)
2		2F (SAMPLER)	(1)
3		6C (SAMPLER)	(1)
4		6D (SAMPLER)	(1)

CONDUCTOR AND CONDUIT SCHEDULE

AWG	CIRCUIT	1	2	3	4	5	6
#14	Ø1 SIGNALS	6				6	3
	Ø2 SIGNALS	6	3	3		3	
	Ø4 SIGNALS	9	6	3	3	3	3
	Ø6 SIGNALS	6	3	3	3	3	3
	SPARES	6	3	3	3	3	3
	TOTAL	33	15	12	9	18	12
#10	SIGNAL COMMON	2	1	1	1	1	1
	FB		2	2	2		
#8	INTERSECTION LTG		2	2	2	2	2
#6	CONTROLLER	2					
EVC		3	2	2	1	1	1
	CAMERA	1	1	1	1		
DLC	Ø1 DETECTORS	1	1	1	1		
	Ø2 DETECTORS	6	2	2		4	
	Ø4 DETECTORS	2	2				
	Ø6 DETECTORS	4	2	2	2	2	2
	TOTAL	13	7	5	3	6	2
CONDUIT SIZE (INCH)		2-4"	3"	3"	3"	3"	3"

POLE AND EQUIPMENT SCHEDULE

No.	STANDARD TYPE	STANDARD SMA	STANDARD LMA	VEH SIG MTG MAST ARM	VEH SIG MTG POLE Ø	VEH SIG MTG POLE	PED SIG MTG	PPB Ø	PPB ARROW	HPS LUM	SPECIAL REQUIREMENTS
A	15TS	-	15	-	1,2	SV-2-TB	-	-	-	200 W	
B	26-4-100	40	15	MAS MAS	6,4	SV-2-TD	-	-	-	200 W	F=15, INSTALL EVD-C, R73-2(CA) AND D3-1 SIGN ON SMA. 5 10
C	19-4-100	30	15	MAS	6,4	SV-2-TB	-	-	-	200 W	INSTALL EVD-B, R3-4 AND D3-1 SIGN ON SMA. 5 10
D	19-4-100	25	15	MAS	2	SV-1-T	-	-	-	200 W	INSTALL EVD-A, R3-4 AND D3-1 SIGN ON SMA. 5 10
E	15TS	-	15	-	4	SV-1-T	-	-	-	200 W	

LIGHTING (CITY STREET)
FIBER OPTIC SYSTEM (CITY)
CLOSED CIRCUIT TELEVISION SYSTEM (CITY)
EMERGENCY VEHICLE DETECTOR SYSTEM (CITY)
SIGNAL AND LIGHTING (CITY STREET LOCATION 1)

NO SCALE

E-20

APPROVED FOR ELECTRICAL WORK ONLY

STATE OF CALIFORNIA - DEPARTMENT OF TRANSPORTATION
Caltrans 06-ELECTRICAL DESIGN

FUNCTIONAL SUPERVISOR: ALI BAKHDOUD
CALCULATED-DESIGNED BY: HASHIM KHALID
CHECKED BY: OMAR MENDOZA
REVISED BY
DATE REVISED

LAST REVISION 12-08-11
DATE PLOTTED => 28-MAR-2012
TIME PLOTTED => 13:29

Dist	COUNTY	ROUTE	POST MILES TOTAL PROJECT	SHEET No.	TOTAL SHEETS
10	SJ	4,99	R19.5/R20.1, 15.0/18.6	845	1414

REGISTERED ELECTRICAL ENGINEER 12-07-11 DATE

3-26-12
PLANS APPROVAL DATE

REGISTERED PROFESSIONAL ENGINEER HASHIM KHALID No. 18054 Exp. 6/30/13 ELECTRICAL STATE OF CALIFORNIA

THE STATE OF CALIFORNIA OR ITS OFFICERS OR AGENTS SHALL NOT BE RESPONSIBLE FOR THE ACCURACY OR COMPLETENESS OF SCANNED COPIES OF THIS PLAN SHEET.

NOTES:

1. FOR NOTES AND SCHEDULES, SEE SHEET E-23.
2. FOR ACCURATE RIGHT OF WAY DATA, CONTACT RIGHT OF WAY ENGINEERING AT THE DISTRICT OFFICE.

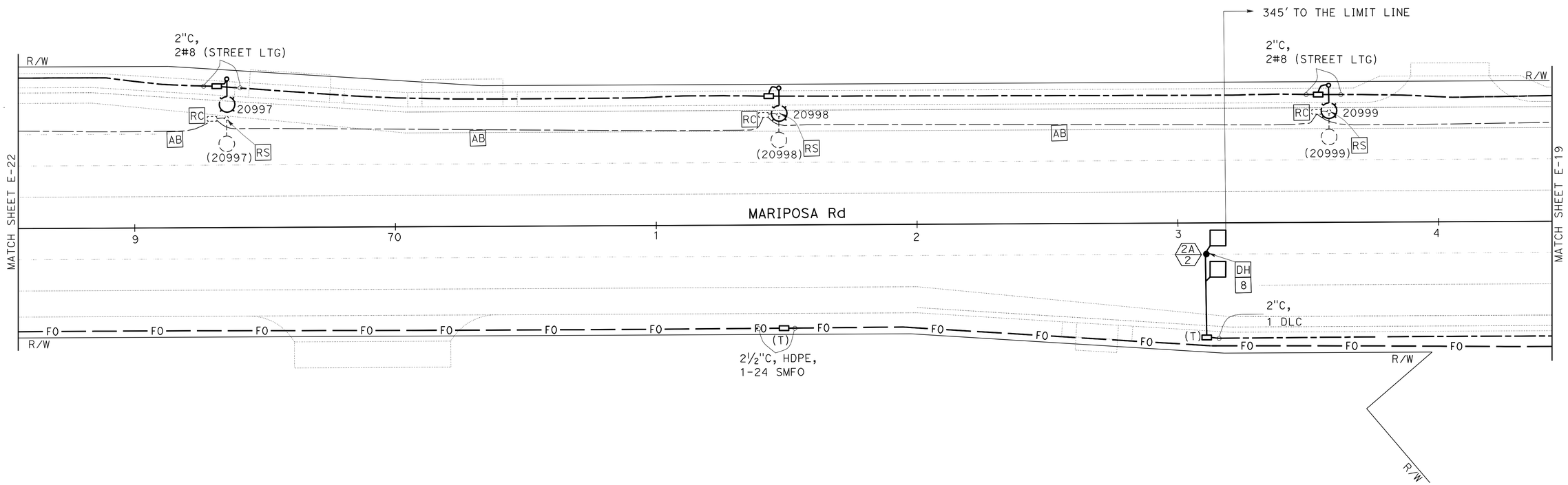

LIGHTING (CITY STREET)
FIBER OPTIC SYSTEM (CITY)
SIGNAL AND LIGHTING(SITY STREET LOCATION 1)

SCALE: 1" = 20'

E-21

APPROVED FOR ELECTRICAL WORK ONLY

STATE OF CALIFORNIA - DEPARTMENT OF TRANSPORTATION
Caltrans® 06-ELECTRICAL DESIGN

FUNCTIONAL SUPERVISOR: ALI BAKHDOUD
CALCULATED-DESIGNED BY: HASHIM KHALID
CHECKED BY: OMAR MENDOZA
REVISED BY
DATE REVISED

LAST REVISION 12-08-11
DATE PLOTTED => 28-MAR-2012
TIME PLOTTED => 13:29

Dist	COUNTY	ROUTE	POST MILES TOTAL PROJECT	SHEET No.	TOTAL SHEETS
10	SJ	4,99	R19.5/R20.1, 15.0/18.6	846	1414

REGISTERED ELECTRICAL ENGINEER 12-07-11 DATE

3-26-12
PLANS APPROVAL DATE

REGISTERED PROFESSIONAL ENGINEER HASHIM KHALID No. 18054 Exp. 6/30/13 ELECTRICAL STATE OF CALIFORNIA

THE STATE OF CALIFORNIA OR ITS OFFICERS OR AGENTS SHALL NOT BE RESPONSIBLE FOR THE ACCURACY OR COMPLETENESS OF SCANNED COPIES OF THIS PLAN SHEET.

NOTES:

1. FOR NOTES AND SCHEDULES, SEE SHEET E-23.
2. FOR ACCURATE RIGHT OF WAY DATA, CONTACT RIGHT OF WAY ENGINEERING AT THE DISTRICT OFFICE.

TRAFFIC PHASE DIAGRAM

STEADY DEMAND SEQUENCE

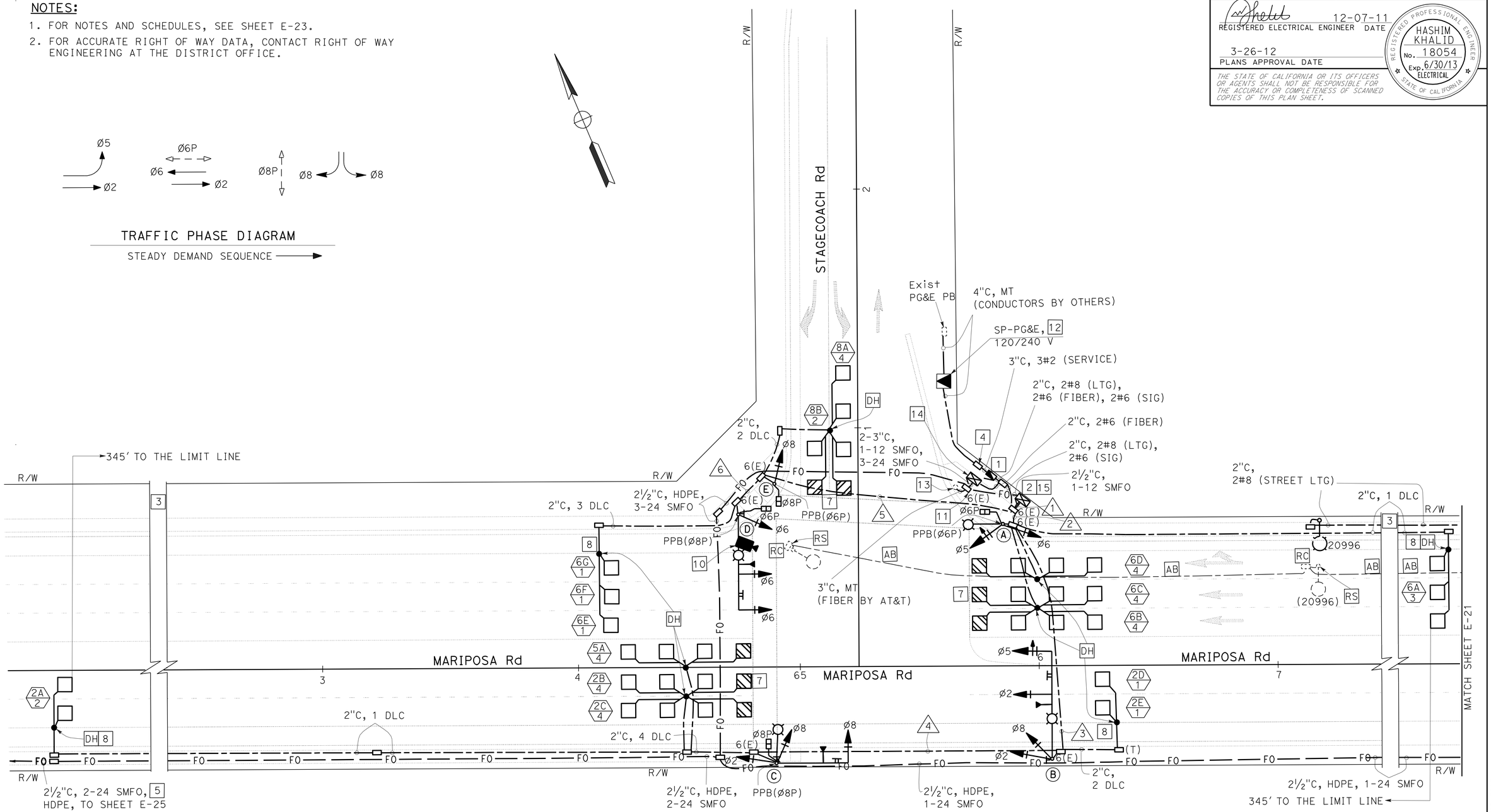

LIGHTING (CITY STREET)
FIBER OPTIC SYSTEM (CITY)
CLOSED CIRCUIT TELEVISION SYSTEM (CITY)
EMERGENCY VEHICLE DETECTOR SYSTEM (CITY)
SIGNAL AND LIGHTING (CITY STREET LOCATION 2)

APPROVED FOR ELECTRICAL WORK ONLY

SCALE: 1" = 20'

E-22

STATE OF CALIFORNIA - DEPARTMENT OF TRANSPORTATION
Caltrans 06-ELECTRICAL DESIGN

FUNCTIONAL SUPERVISOR: ALI BAKHDOUD
CALCULATED-DESIGNED BY: OMAR MENDOZA
CHECKED BY: HASHIM KHALID
REVISED BY
DATE REVISED

LAST REVISION 12-08-11
DATE PLOTTED => 28-MAR-2012
TIME PLOTTED => 13:29

Dist	COUNTY	ROUTE	POST MILES TOTAL PROJECT	SHEET No.	TOTAL SHEETS
10	SJ	4,99	R19.5/R20.1, 15.0/18.6	847	1414

REGISTERED ELECTRICAL ENGINEER 12-07-11 DATE

3-26-12
PLANS APPROVAL DATE

REGISTERED PROFESSIONAL ENGINEER HASHIM KHALID No. 18054 Exp. 6/30/13 ELECTRICAL STATE OF CALIFORNIA

THE STATE OF CALIFORNIA OR ITS OFFICERS OR AGENTS SHALL NOT BE RESPONSIBLE FOR THE ACCURACY OR COMPLETENESS OF SCANNED COPIES OF THIS PLAN SHEET.

NOTES: (FOR SHEET E-21, E-22 AND E-23)

1. 120/240 V, 1Ø, 3-WIRE, TYPE III-AF SERVICE EQUIPMENT ENCLOSURE WITH THE FOLLOWING CIRCUIT BREAKERS:

CITY SERVICE

AMPERES	VOLTS	POLES	NAMEPLATE	METER	PHOTOELECTRIC CONTROL TYPE
100	240	2	MAIN BREAKER	YES	—
50	120	1	TRAFFIC SIGNAL	YES	—
30	240	2	INTERSECTION LIGHTING	NO	V
20	240	2	STREET LTG	NO	V
15	120	1	LIGHTING CONTROL	NO	—
30	120	1	FIBER	NO	—
20	120	1	SPARE	YES	—
—	—	6	SPACE	—	—

2. STATE-FURNISHED MODEL 2070N CONTROLLER ASSEMBLY. INSTALL STATE-FURNISHED 4-CHANNEL MULTIMODE PHASE SELECTOR AND HARNESS. REFER TO DETAILS A AND B ON SHEET E-48.
3. INSTALL No. 5 PULL BOXES AS NECESSARY TO MAINTAIN 200′ MAXIMUM SPACING.
4. PULL BOX PER UTILITY REQUIREMENTS.
5. 855′ TO A PB LOCATED @ STATION 52+75. INSTALL No. 5 PULL BOXES AS NECESSARY TO MAINTAIN 200′ MAXIMUM SPACING.
6. REFER TO SIGN PLANS FOR SIGN DETAILS. INSTALL CITY STREET NAME SIGN PER DETAIL B ON SHEET E-61.
7. INSTALL INDUCTIVE LOOP DETECTORS PER DETAIL E1 AND E2 ON SHEET E-48.
8. INSTALL A CONCRETE CAP AROUND THE HANDHOLE PER DETAIL D ON SHEET E-48.
9. STATE-FURNISHED EVD PER DETAIL C ON SHEET E-48 AND POLE DETAIL SES-3.
10. STATE-FURNISHED CAMERA PER DETAIL A ON SHEET E-61 AND POLE DETAIL SES-3. INSTALLATION SHALL INCLUDE ALL MOUNTING HARDWARE, VIDEO, DATA, AND POWER CABLES, FIELD AND CENTRAL COMMUNICATION MODEMS (VIDEO/DATA) AND ASSOCIATED EQUIPMENT. CONTACT THE CITY OF STOCKTON TRAFFIC ENGINEERING AT (209) 937-8411 PRIOR TO CAMERA INSTALLATION.
11. PULL BOX PER DETAIL F ON SHEET E-48.
12. PAD MOUNTED TRANSFORMER PER PG&E REQUIREMENTS. TRANSFORMER WILL BE INSTALLED BY PG&E.
13. Exist PACBEL FEED POINT, THE CONTRACTOR SHALL COORDINATE WITH AT&T FOR KNOCKOUT/ENTRANCE INTO A VAULT.
14. MODIFIED MODEL 334 CABINET FOR CITY FIBER OPTIC SYSTEM PER DETAIL ON SHEET E-48.
15. TERMINATE FIBER DROP IN LUI PER DETAIL G ON SHEET E-48. CONTACT THE CITY OF STOCKTON TRAFFIC ENGINEERING AT (209) 937-8411 PRIOR TO FIBER SPLICING.

SENSOR TABLE

CH	DET	LOOP DETECTORS	
1	1	6B	(4)
2		2A	(2)
3		8A	(4)
4			
1	2	5A	(4)
2		6A	(3)
3			
4		8B (DELAY)	(2)
1	3	2B	(4)
2		2C	(4)
3		6C	(4)
4		6D	(4)
1	4	2D (SAMPLER)	(1)
2		2E (SAMPLER)	(1)
3		6E (SAMPLER)	(1)
4		6F (SAMPLER)	(1)
4	5	6G (SAMPLER)	(1)

CONDUCTOR AND CONDUIT SCHEDULE

AWG	CIRCUIT	1	2	3	4	5	6
#14	Ø2 SIGNALS	6	6	6	3		
	Ø5 SIGNALS	6	6	3			
	Ø6 SIGNALS	6	3			3	3
	Ø8 SIGNALS	9	6	6	3	3	
	Ø6 PED	4	2			2	2
	Ø8 PED	4	2	2	2	2	
	Ø6 PPB	2	1			1	
	Ø8 PPB	2	1	1	1	1	1
	PPB COMMON	2	1	1	1	1	1
	SPARES	6	3	3	3	3	3
	TOTAL	47	31	22	13	16	10
#10	SIGNAL COMMON	2	1	1	1	1	1
#8	INTERSECTION LTG		2	2	2	2	2
#6	CONTROLLER	2					
EVC		3	2	2	1	1	1
	CAMERA	1				1	1
DLC	Ø2 DETECTORS	5	5	5	3		
	Ø5 DETECTORS	1	1	1	1		
	Ø6 DETECTORS	7	4			3	3
	Ø8 DETECTORS	2				2	
	TOTAL	15	10	6	4	5	3
CONDUIT SIZE (INCH)		2-4"	3"	3"	3"	3"	3"

POLE AND EQUIPMENT SCHEDULE

No.	STANDARD TYPE	STANDARD SMA	STANDARD LMA	VEH SIG MTG MAST ARM	VEH SIG MTG POLE Ø	VEH SIG MTG POLE	PED SIG MTG	PPB Ø	PPB ARROW	HPS LUM	SPECIAL REQUIREMENTS
A	15TS	-	15	-	5,6	SV-2-TB	SP-1-T	6	LEFT	200 W	
B	26-4-100	45	15	MAS MAS	2,8	SV-2-TD	-	-	-	200 W	F=18 ,INSTALL EVD-A, R73-2(CA) AND D3-1 SIGN ON SMA. [6] [9]
C	19-4-100 (MODIFY)	30	15	MAS	2,8	SV-2-TB	SP-1-T	8	RIGHT	200 W	INSTALL EVD-D, R61-19(CA) AND D3-1 SIGN ON SMA. MOUNT LMA AT 90 DEGREE ANGLE FROM SMA. [6] [9]
D	26-4-100	40	15	MAS MAS	6	SV-1-T	SP-1-T	8	LEFT	200 W	F=15′,INSTALL EVD-C, R3-4 AND D3-1 SIGN ON SMA. [6] [9]
E	1-B	-	-	-	8	SV-1-T	SP-1-T	6	RIGHT	-	

LIGHTING (CITY STREET)
FIBER OPTIC SYSTEM (CITY)
CLOSED CIRCUIT TELEVISION SYSTEM (CITY)
EMERGENCY VEHICLE DETECTOR SYSTEM (CITY)
SIGNAL AND LIGHTING (CITY STREET LOCATION 2)

APPROVED FOR ELECTRICAL WORK ONLY

NO SCALE

E-23

REVISED BY | DATE REVISED
HASHIM KHALID | OMAR MENDOZA
CALCULATED-DESIGNED BY | CHECKED BY
FUNCTIONAL SUPERVISOR | ALI BAKHDOUD
STATE OF CALIFORNIA - DEPARTMENT OF TRANSPORTATION
Caltrans 06-ELECTRICAL DESIGN

LAST REVISION 12-08-11 | DATE PLOTTED => 30-MAR-2012 | TIME PLOTTED => 11:26

Dist	COUNTY	ROUTE	POST MILES TOTAL PROJECT	SHEET No.	TOTAL SHEETS
10	SJ	4,99	R19.5/R20.1, 15.0/18.6	848	1414

REGISTERED ELECTRICAL ENGINEER 12-07-11 DATE

3-26-12
PLANS APPROVAL DATE

REGISTERED PROFESSIONAL ENGINEER HASHIM KHALID No. 18054 Exp. 6/30/13 ELECTRICAL STATE OF CALIFORNIA

THE STATE OF CALIFORNIA OR ITS OFFICERS OR AGENTS SHALL NOT BE RESPONSIBLE FOR THE ACCURACY OR COMPLETENESS OF SCANNED COPIES OF THIS PLAN SHEET.

NOTES: (FOR THIS SHEET)

1 RS Exist opticom (evd) TO THE CITY OF STOCKTON (721 DETECTORS AND 754 CORD).

2. FOR ACCURATE RIGHT OF WAY DATA, CONTACT RIGHT OF WAY ENGINEERING AT THE DISTRICT OFFICE.

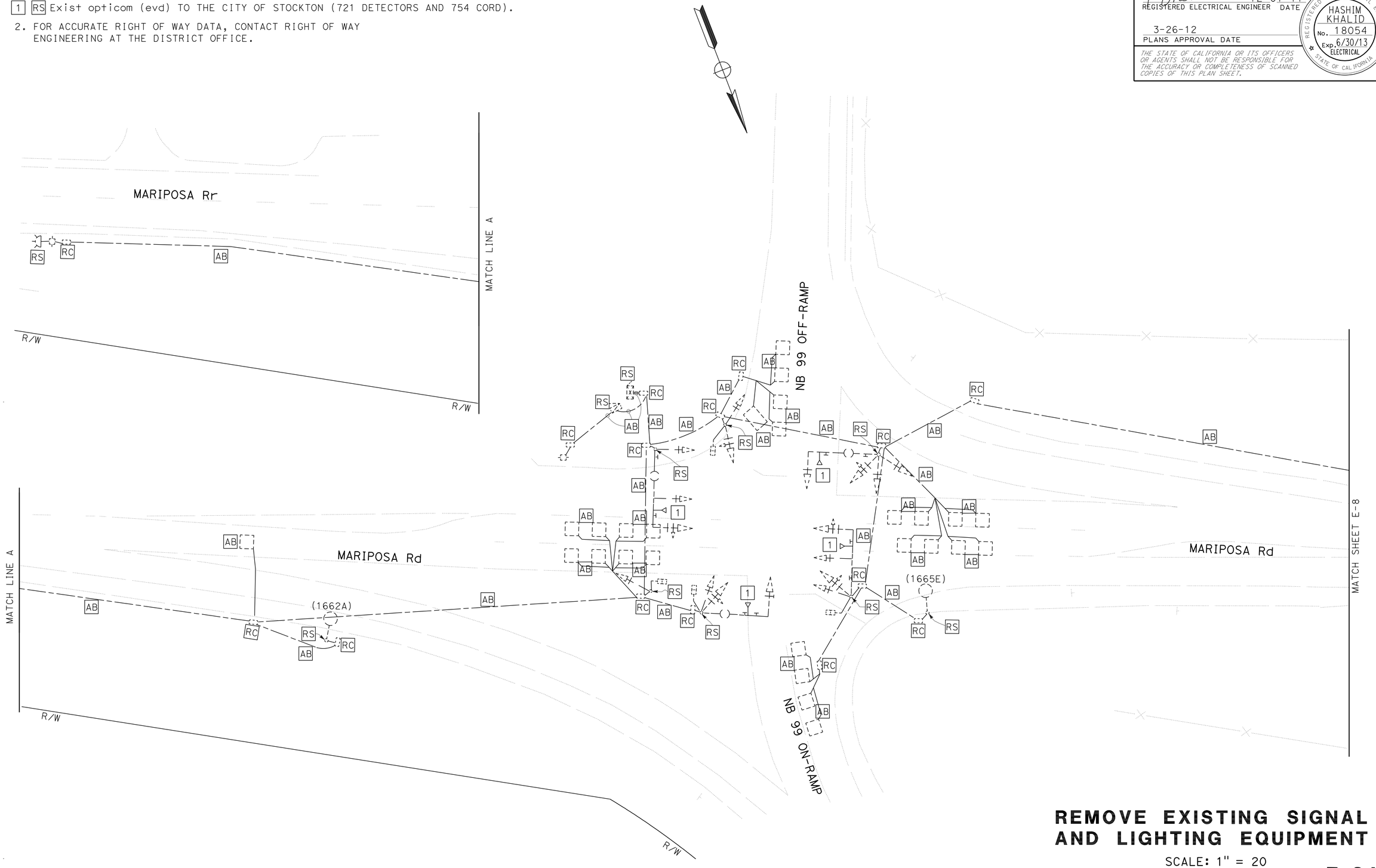

REMOVE EXISTING SIGNAL AND LIGHTING EQUIPMENT

SCALE: 1" = 20

E-24

APPROVED FOR ELECTRICAL WORK ONLY

STATE OF CALIFORNIA - DEPARTMENT OF TRANSPORTATION
Caltrans 06-ELECTRICAL DESIGN

FUNCTIONAL SUPERVISOR: ALI BAKHDOUD
CALCULATED-DESIGNED BY: HASHIM KHALID
CHECKED BY: OMAR MENDOZA
REVISED BY
DATE REVISED

LAST REVISION 12-08-11
DATE PLOTTED => 28-MAR-2012
TIME PLOTTED => 13:30

Dist	COUNTY	ROUTE	POST MILES TOTAL PROJECT	SHEET No.	TOTAL SHEETS
10	SJ	4,99	R19.5/R20.1, 15.0/18.6	849	1414

REGISTERED ELECTRICAL ENGINEER 12-07-11 DATE

3-26-12
PLANS APPROVAL DATE

REGISTERED PROFESSIONAL ENGINEER HASHIM KHALID No. 18054 Exp. 6/30/13 ELECTRICAL STATE OF CALIFORNIA

THE STATE OF CALIFORNIA OR ITS OFFICERS OR AGENTS SHALL NOT BE RESPONSIBLE FOR THE ACCURACY OR COMPLETENESS OF SCANNED COPIES OF THIS PLAN SHEET.

NOTES:

1. FOR NOTES AND SCHEDULES, SEE SHEET E-26.
2. FOR ACCURATE RIGHT OF WAY DATA, CONTACT RIGHT OF WAY ENGINEERING AT THE DISTRICT OFFICE.

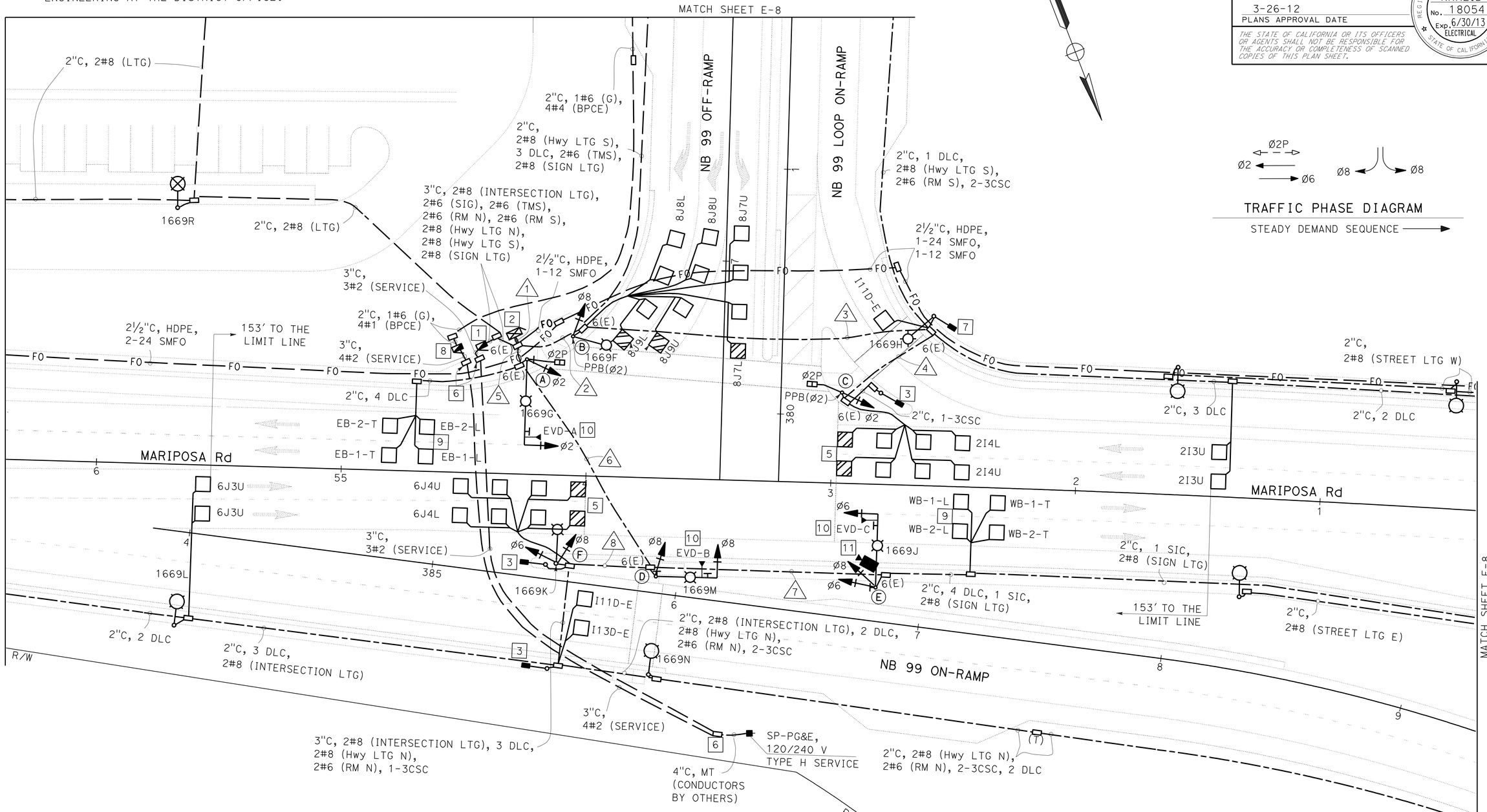

EMERGENCY VEHICLE DETECTOR SYSTEM (CITY)
CLOSED CIRCUIT TELEVISION SYSTEM (CITY)
LIGHTING (CITY STREET)
FIBER OPTIC SYSTEM (CITY)
MODIFY SIGNAL AND LIGHTING (LOCATION 1)

APPROVED FOR ELECTRICAL WORK ONLY

SCALE: 1" = 20

E-25

STATE OF CALIFORNIA - DEPARTMENT OF TRANSPORTATION
Caltrans 06-ELECTRICAL DESIGN

FUNCTIONAL SUPERVISOR: ALI BAKHDOUD
CALCULATED-DESIGNED BY: HASHIM KHALID
CHECKED BY: OMAR MENDOZA
REVISED BY
DATE REVISED

LAST REVISION DATE PLOTTED => 30-MAR-2012
TIME PLOTTED => 11:26

Dist	COUNTY	ROUTE	POST MILES TOTAL PROJECT	SHEET No.	TOTAL SHEETS
10	SJ	4,99	R19.5/R20.1, 15.0/18.6	850	1414

REGISTERED ELECTRICAL ENGINEER 12-07-11 DATE

3-26-12
PLANS APPROVAL DATE

REGISTERED PROFESSIONAL ENGINEER HASHIM KHALID No. 18054 Exp. 6/30/13 ELECTRICAL STATE OF CALIFORNIA

THE STATE OF CALIFORNIA OR ITS OFFICERS OR AGENTS SHALL NOT BE RESPONSIBLE FOR THE ACCURACY OR COMPLETENESS OF SCANNED COPIES OF THIS PLAN SHEET.

NOTES: (FOR SHEET E-25 AND E-26)

1 120/240 V, 1Ø, 3-WIRE, TYPE III-CF SERVICE EQUIPMENT ENCLOSURE WITH THE FOLLOWING CIRCUIT BREAKERS:

CTID No. 10290990016690S

AMPERES	VOLTS	POLES	NAMEPLATE	METER	PHOTOELECTRIC CONTROL TYPE
100	240	2	MAIN BREAKER	YES	——
50	120	1	TRAFFIC SIGNAL	YES	——
30	120	1	RAMP METERING N	YES	——
30	120	1	RAMP METERING S	YES	——
30	120	1	TMS	YES	——
20	240	2	SPARE	YES	——
——	——	6	SPACE	——	——

CTID No. 10290990016690L

AMPERES	VOLTS	POLES	NAMEPLATE	METER	PHOTOELECTRIC CONTROL TYPE
100	240	2	MAIN BREAKER	YES	——
30	240	2	INTERSECTION LIGHTING	YES	V
30	240	2	HIGHWAY LIGHTING N	YES	V
30	240	2	HIGHWAY LIGHTING S	YES	V
30	240	2	SIGN LIGHTING	YES	LC3
15	120	1	LIGHT CONTROL	YES	——
30	240	2	SPARE	YES	——
——	——	6	SPACE	——	——

2 STATE-FURNISHED MODEL 2070 CONTROLLER ASSEMBLY AND BBS. INSTALL STATE-FURNISHED 4-CHANNEL MULTIMODE PHASE SELECTOR AND HARNESS.

3 TYPE 1-A SIGNAL STANDARD PER DETAIL E ON SHEET E-47.

4 REFER TO SIGN PLANS FOR SIGN DETAILS.

5 INDUCTIVE LOOP DETECTORS SHALL BE CONNECTED IN A PULL BOX AS SHOWN IN DETAIL A, WITH 10′ LOOP SPACING AND 1′ SET BACK FROM STOP BAR.

6 PULL BOX PER UTILITY REQUIREMENTS.

7 "METER ON" HEAD ON TYPE 15TS AT 7′ HEIGHT PER DETAIL F ON SHEET E-47.

8 120/240 V, 3Ø, 4-WIRE TYPE III-DF SERVICE EQUIPMENT ENCLOSURE WITH THE FOLLOWING CIRCUIT BREAKERS.

CTID No. 10290990016648I

AMPERES	VOLTS	POLES	NAMEPLATE	METER	PHOTOELECTRIC CONTROL TYPE
100	240	3	MAIN BREAKER	YES	——
80	240	3	BOOSTER PUMP	YES	——
30	240	2	SPARE	YES	——
——	——	6	SPACE	——	——

9 INDUCTIVE LOOP DETECTORS SHALL BE SPACED 20′ LEADING EDGE TO LEADING EDGE, COIL 6′ OF DLC IN CABINET.

10 STATE-FURNISHED EVD PER DETAIL C ON SHEET E-48, AND POLE DETAIL ON SHEET SES-3.

11 STATE-FURNISHED CAMERA PER DETAIL A ON SHEET E-61, AND POLE DETAIL ON SHEET SES-3. INSTALLATION SHALL INCLUDE ALL MOUNTING HARDWARE, VIDEO, DATA AND POWER CABLES, FIELD AND CENTRAL COMMUNICATION MODEMS (VIDEO/DATA) AND ASSOCIATED EQUIPMENT. CONTACT THE CITY OF STOCKTON TRAFFIC ENGINEERING AT (209) 937-8411 PRIOR TO CAMERA INSTALLATION.

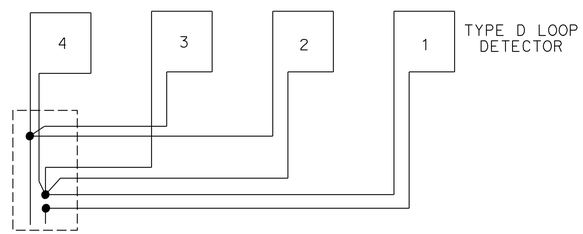

TYPICAL LOOP CONNECTIONS
(DASHED LINES REPRESENT THE PULL BOX)

DETAIL A

CONDUCTOR AND CONDUIT SCHEDULE

CONDUCTOR DESIGNATION			CONDUIT RUN NUMBER AND SIZE							
CABLE TYPE	POLE	PHASE	1 2-3"	2 3"	3 3"	4 3"	5 3"	6 3"	7 3"	8 3"
VEH-PED 12CSC	A	2,2P	1				1			
	B	8	1 / 1	1 / 1						
	C	2,2P	1 / 1	1 / 1	1 / 1	1 / 1				
	D	8	1				1	1		
	E	6,8	1				1	1	1	
	F	6,8	1				1	1		1
PPB 3CSC		TOTAL	6 / 2	2 / 2	1 / 1	1 / 1	4	3	1	1
AWG		CIRCUIT								
#8		INTERSECTION LTG		2	2		2	2	2	2
#6		RAMP METERING		2	2		2	2		2
3CSC		METER ON SIGN				1				
6 PAIR		SIC	1				1	1	1	
#8		SIGN LIGHTING		2			2	2	2	
#8		HIGHWAY LIGHTING N					2	2		2
#8		HIGHWAY LIGHTING S		2	2					
EVC			3				3	2	1	
CAMERA			1				1	1	1	
DETECTORS-TYPE B DLC										
PHASE										
Ø2			2	2	2	2				
Ø2 MID			1	1	1					
Ø2 ADV			2	2	2					
Ø6			2				2	2		2
Ø6 MID			1				1	1		1
Ø6 ADV			2				2	2		2
Ø8			6	6						
Ø8 ADV			3	3						
WB			4				4	4	4	
EB			4				4			
TOTAL			27	14	5	2	13	9	4	5

POLE AND EQUIPMENT SCHEDULE

	STANDARD			VEH SIG MTG		PED SIG MTG	PPB		HPS LUM	SPECIAL REQUIREMENTS
No.	TYPE	SMA	LMA	MAST ARM	POLE		Ø	ARROW		
A	24-4-100	35	15	MAS	SV-1-T	SP-1-T			200 W	INSTALL R3-1, EVD-A AND R3-4 SIGN ON SMA. 4
B	15TS		15		SV-1-T		2	→	200 W	
C	1-A				TV-1-T	SP-1-T	2	→		
D	19-4-100	25	12	MAS	SV-1-T				200 W	INSTALL R61-13, EVD-B AND D3-1 SIGN ON SMA. 4
E	19-4-100	30	15	MAS	SV-2-T				200 W	INSTALL R3-18 SIGN, EVD-C ON SMA. INSTALL R9-3a SIGN ON SIGNAL POLE. 4
F	15TS		15		SV-2-T				200 W	

APPROVED FOR ELECTRICAL WORK ONLY

EMEGENCY VEHICLE DETECTOR SYSTEM (CITY)
CLOSED CIRCUIT TELEVISION SYSTEM (CITY)
LIGHTING (CITY STREET)
FIBER OPTIC SYSTEM (CITY)
MODIFY SIGNAL AND LIGHTING
(LOCATION 1)

NO SCALE

E-26

REVISED BY | DATE REVISED
HASHIM KHALID | OMAR MENDOZA
CALCULATED-DESIGNED BY | CHECKED BY
FUNCTIONAL SUPERVISOR | ALI BAKHDOUD
STATE OF CALIFORNIA - DEPARTMENT OF TRANSPORTATION
Caltrans 06-ELECTRICAL DESIGN

LAST REVISION 12-08-11 | DATE PLOTTED => 30-MAR-2012 | TIME PLOTTED => 11:26

Dist	COUNTY	ROUTE	POST MILES TOTAL PROJECT	SHEET No.	TOTAL SHEETS
10	SJ	4,99	R19.5/R20.1, 15.0/18.6	851	1414

REGISTERED ELECTRICAL ENGINEER 12-07-11 DATE

3-26-12
PLANS APPROVAL DATE

REGISTERED PROFESSIONAL ENGINEER HASHIM KHALID No. 18054 Exp. 6/30/13 ELECTRICAL STATE OF CALIFORNIA

THE STATE OF CALIFORNIA OR ITS OFFICERS OR AGENTS SHALL NOT BE RESPONSIBLE FOR THE ACCURACY OR COMPLETENESS OF SCANNED COPIES OF THIS PLAN SHEET.

NOTES: (FOR THIS SHEET)

1 RS Exist opticom (evd) TO THE CITY OF STOCKTON (721 DETECTORS AND 754 CORD).

2. FOR ACCURATE RIGHT OF WAY DATA, CONTACT RIGHT OF WAY ENGINEERING AT THE DISTRICT OFFICE.

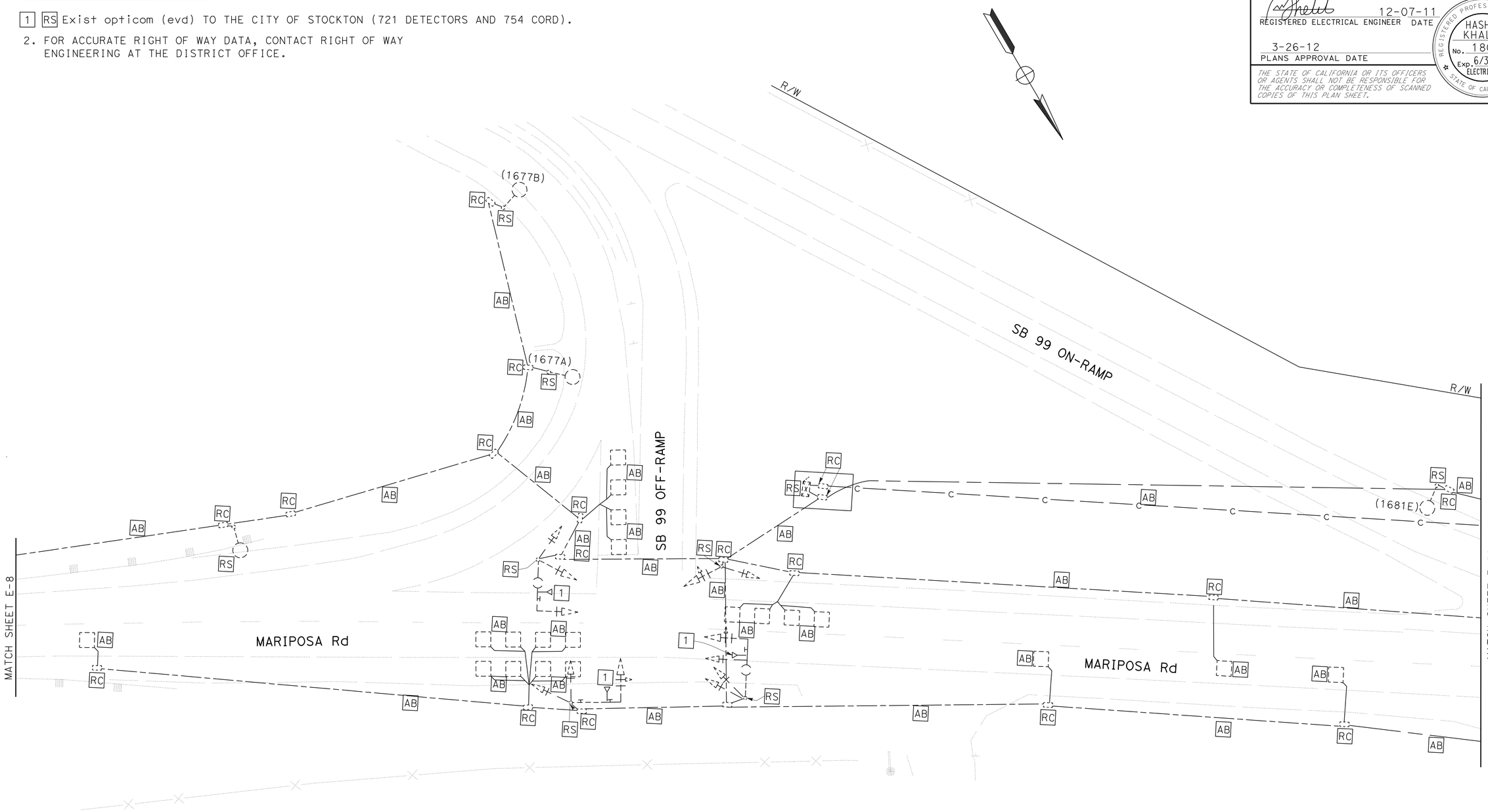

REMOVE EXISTING SIGNAL AND LIGHTING EQUIPMENT

SCALE: 1" = 20

E-27

APPROVED FOR ELECTRICAL WORK ONLY

STATE OF CALIFORNIA - DEPARTMENT OF TRANSPORTATION
Caltrans 06-ELECTRICAL DESIGN

FUNCTIONAL SUPERVISOR: ALI BAKHDOUD
CALCULATED-DESIGNED BY: HASHIM KHALID
CHECKED BY: OMAR MENDOZA
REVISED BY
DATE REVISED

LAST REVISION 12-08-11 | DATE PLOTTED => 28-MAR-2012 | TIME PLOTTED => 13:30

Dist	COUNTY	ROUTE	POST MILES TOTAL PROJECT	SHEET No.	TOTAL SHEETS
10	SJ	4,99	R19.5/R20.1, 15.0/18.6	852	1414

REGISTERED ELECTRICAL ENGINEER 12-07-11 DATE

3-26-12
PLANS APPROVAL DATE

REGISTERED PROFESSIONAL ENGINEER HASHIM KHALID No. 18054 Exp. 6/30/13 ELECTRICAL STATE OF CALIFORNIA

THE STATE OF CALIFORNIA OR ITS OFFICERS OR AGENTS SHALL NOT BE RESPONSIBLE FOR THE ACCURACY OR COMPLETENESS OF SCANNED COPIES OF THIS PLAN SHEET.

NOTES: (FOR THIS SHEET)

1 RS Exist opticom (evd) TO THE CITY OF STOCKTON (721 DETECTORS AND 754 CORD).

2. FOR ACCURATE RIGHT OF WAY DATA, CONTACT RIGHT OF WAY ENGINEERING AT THE DISTRICT OFFICE.

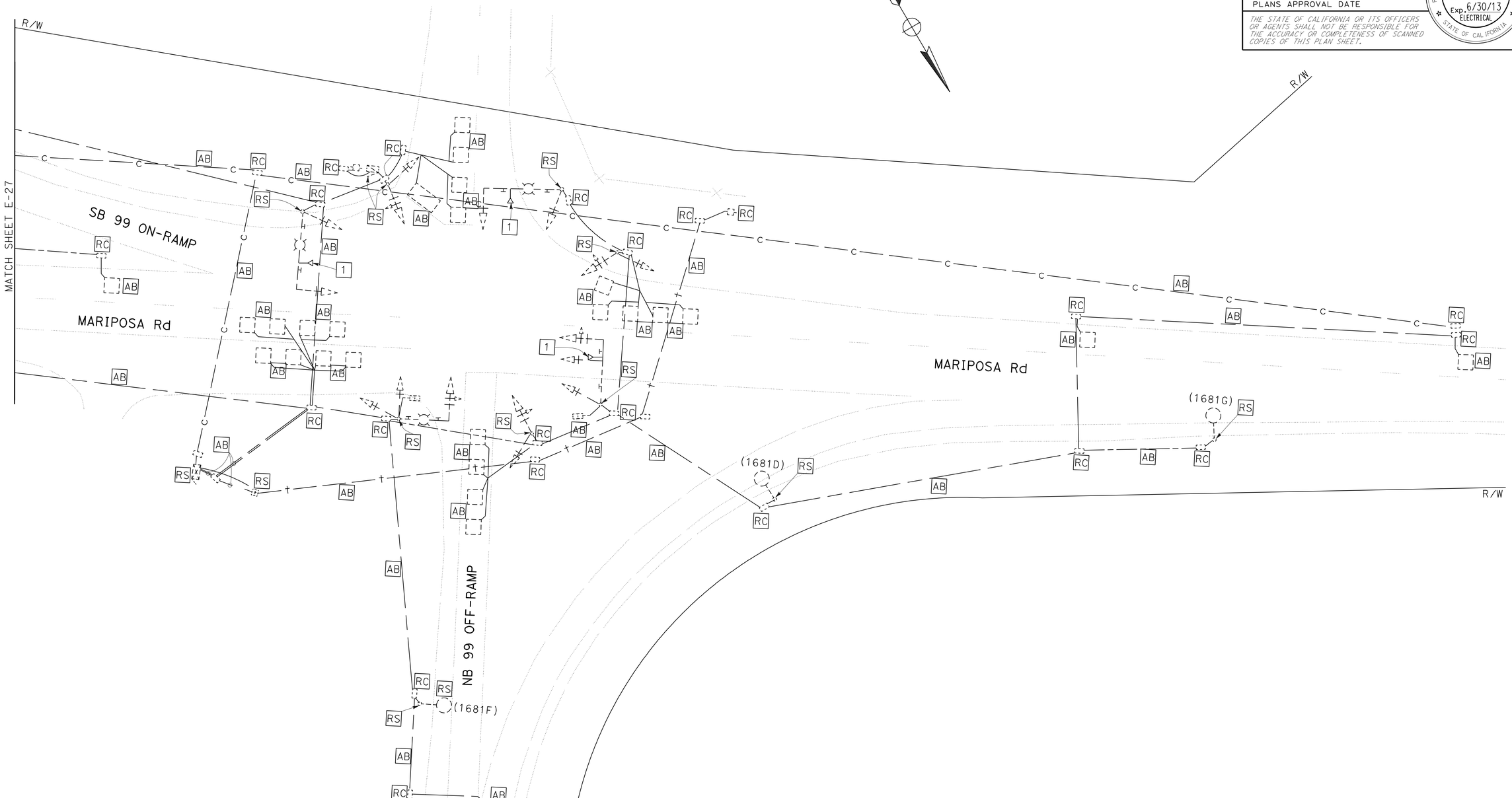

REMOVE EXISTING SIGNAL AND LIGHTING EQUIPMENT

SCALE: 1" = 20

E-28

APPROVED FOR ELECTRICAL WORK ONLY

STATE OF CALIFORNIA - DEPARTMENT OF TRANSPORTATION
Caltrans 06-ELECTRICAL DESIGN

FUNCTIONAL SUPERVISOR: ALI BAKHDOUD
CALCULATED-DESIGNED BY: HASHIM KHALID
CHECKED BY: OMAR MENDOZA
REVISED BY
DATE REVISED

LAST REVISION 12-08-11
DATE PLOTTED => 28-MAR-2012
TIME PLOTTED => 13:30

Dist	COUNTY	ROUTE	POST MILES TOTAL PROJECT	SHEET No.	TOTAL SHEETS
10	SJ	4,99	R19.5/R20.1, 15.0/18.6	853	1414

REGISTERED ELECTRICAL ENGINEER 12-07-11 DATE

3-26-12
PLANS APPROVAL DATE

REGISTERED PROFESSIONAL ENGINEER HASHIM KHALID No. 18054 Exp. 6/30/13 ELECTRICAL STATE OF CALIFORNIA

THE STATE OF CALIFORNIA OR ITS OFFICERS OR AGENTS SHALL NOT BE RESPONSIBLE FOR THE ACCURACY OR COMPLETENESS OF SCANNED COPIES OF THIS PLAN SHEET.

NOTES:

1. FOR NOTES AND SCHEDULES, SEE SHEET E-30.
2. FOR ACCURATE RIGHT OF WAY DATA, CONTACT RIGHT OF WAY ENGINEERING AT THE DISTRICT OFFICE.

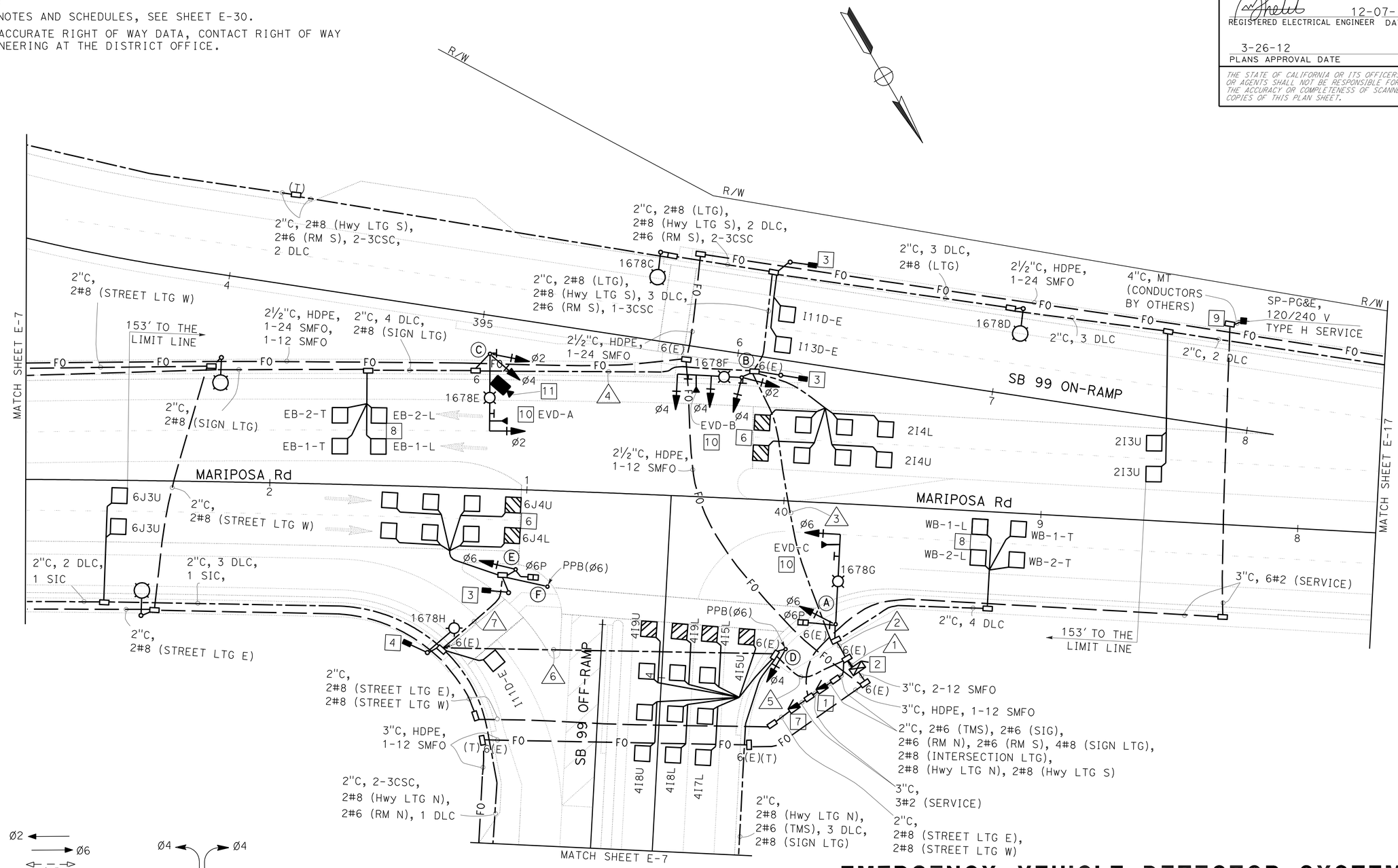

TRAFFIC PHASE DIAGRAM

STEADY DEMAND SEQUENCE

EMERGENCY VEHICLE DETECTOR SYSTEM (CITY)
CLOSED CIRCUIT TELEVISION SYSTEM (CITY)
LIGHTING (CITY STREET)
FIBER OPTIC SYSTEM (CITY)
MODIFY SIGNAL AND LIGHTING
(LOCATION 2)

SCALE: 1" = 20'

E-29

APPROVED FOR ELECTRICAL WORK ONLY

STATE OF CALIFORNIA - DEPARTMENT OF TRANSPORTATION
Caltrans 06-ELECTRICAL DESIGN

FUNCTIONAL SUPERVISOR: ALI BAKHDOUD
CALCULATED-DESIGNED BY: OMAR MENDOZA
CHECKED BY: HASHIM KHALID
REVISED BY
DATE REVISED

LAST REVISION: DATE PLOTTED => 30-MAR-2012
12-08-11 TIME PLOTTED => 11:26

Dist	COUNTY	ROUTE	POST MILES TOTAL PROJECT	SHEET No.	TOTAL SHEETS
10	SJ	4,99	R19.5/R20.1, 15.0/18.6	854	1414

REGISTERED ELECTRICAL ENGINEER 12-07-11 DATE

3-26-12
PLANS APPROVAL DATE

REGISTERED PROFESSIONAL ENGINEER HASHIM KHALID No. 18054 Exp. 6/30/13 ELECTRICAL STATE OF CALIFORNIA

THE STATE OF CALIFORNIA OR ITS OFFICERS OR AGENTS SHALL NOT BE RESPONSIBLE FOR THE ACCURACY OR COMPLETENESS OF SCANNED COPIES OF THIS PLAN SHEET.

NOTES: (FOR SHEET E-29 AND E-30)

1 120/240 V, 1Ø, 3-WIRE, TYPE III-CF SERVICE EQUIPMENT ENCLOSURE WITH THE FOLLOWING CIRCUIT BREAKERS:

CTID No. 10290990016780S

AMPERES	VOLTS	POLES	NAMEPLATE	METER	PHOTOELECTRIC CONTROL TYPE
100	240	2	MAIN BREAKER	YES	——
50	120	1	TRAFFIC SIGNAL	YES	——
30	120	1	RAMP METERING N	YES	——
30	120	1	RAMP METERING S	YES	——
30	120	1	TMS	YES	——
20	240	2	SPARE	YES	——
——	——	6	SPACE	——	——

CTID No. 10290990016780L

AMPERES	VOLTS	POLES	NAMEPLATE	METER	PHOTOELECTRIC CONTROL TYPE
100	240	2	MAIN BREAKER	YES	——
30	240	2	INTERSECTION LTG	YES	V
30	240	2	HIGHWAY LIGHTING N	YES	V
30	240	2	HIGHWAY LIGHTING S	YES	V
30	240	2	SIGN LIGHTING	YES	LC3
15	120	1	LIGHT CONTROL	YES	——
20	240	2	SPARE	YES	——
——	——	6	SPACE	——	——

2 STATE-FURNISHED MODEL 2070 CONTROLLER ASSEMBLY AND BBS. INSTALL STATE-FURNISHED 4-CHANNEL MULTI MODE PHASE SELECTOR AND HARNESS.

3 TYPE 1-A SIGNAL STANDARD PER DETAIL E ON SHEET E-47.

4 "METER ON" HEAD ON TYPE 15TS AT 7′ HEIGHT PER DETAIL F ON SHEET E-47.

5 REFER TO SIGN PLANS FOR SIGN DETAILS.

6 INDUCTIVE LOOP DETECTORS SHALL BE CONNECTED IN A PULL BOX AS SHOWN IN ØETAIL A, WITH 10′ LOOP SPACING AND 1′ SET BACK FROM STOP BAR.

7 120/240 V, 1 Ø, 3-WIRE, TYPE III-AF SERVICE EQUIPMENT ENCLOSURE FOR CITY LIGHTING WITH THE FOLLOWING CIRCUIT BREAKERS:

CITY SERVICE

AMPERES	VOLTS	POLES	NAMEPLATE	METER	PHOTOELECTRIC CONTROL TYPE
100	240	2	MAIN BREAKER	YES	——
30	240	2	STREET LIGHTING E	YES	IV
30	240	2	STREET LIGHTING W	YES	IV
20	240	2	SPARE	YES	——
——	——	6	SPACE	——	——

8 INDUCTIVE LOOP DETECTORS SHALL BE SPACED 20′ LEADING EDGE TO LEADING EDGE, COIL 6′ OF DLC IN CABINET.

9 PULL BOX PER UTILITY REQUIREMENTS.

10 STATE-FURNISHED EVD PER DETAIL C ON SHEET E-48 AND POLE DETAIL ON SES-3.

POLE AND EQUIPMENT SCHEDULE

No.	STANDARD TYPE	STANDARD SMA	STANDARD LMA	VEH SIG MTG MAST ARM	VEH SIG MTG POLE	PED SIG MTG	PPB Ø	PPB ARROW	HPS LUM	SPECIAL REQUIREMENTS
A	24-4-100	35	12	MAS	SV-1-T	SP-1-T			200 W	INSTALL R3-4, EVD-C AND R3-1 SIGN ON SMA. 5
B	19-4-100	25	12	MAS MAS	SV-2-T				200 W	F=12, INSTALL R61-13(CA), EVD-B AND D3-1 SIGN ON SMA. INSTALL R9-3a SIGN ON SIGNAL POLE. 5
C	19-4-100	30	12	MAS	SV-2-T				200 W	INSTALL R3-18 SIGN AND EVD-A ON SMA. INSTALL R9-3a SIGN ON SIGNAL POLE. 5
D	1-A				TV-1-T		6	→		
E	1-A				TV-1-T	SP-1-T				
F	PPB POLE						6	←		

11 STATE-FURNISHED CAMERA PER DETAIL A ON SHEET E-61 AND POLE DETAIL SES-3. INSTALLATION SHALL INCLUDE ALL MOUNTING HARDWARE, VIDEO, DATA, AND POWER CABLES, FIELD AND CENTRAL COMMUNICATION MODEMS (VIDEO/DATA) AND ASSOCIATED EQUIPMENT. CONTACT THE CITY OF STOCKTON TRAFFIC ENGINEERING AT (209-937-8411) PRIOR TO CAMERA INSTALLATION.

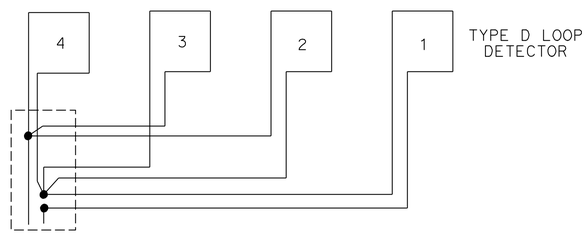

TYPICAL LOOP CONNECTIONS
(DASHED LINES REPRESENT THE PULL BOX)

DETAIL A

CONDUCTOR AND CONDUIT SCHEDULE

CONDUCTOR DESIGNATION: CABLE TYPE	POLE	PHASE	CONDUIT RUN NUMBER AND SIZE 1 (2-3")	2 (3")	3 (3")	4 (3")	5 (3")	6 (3")	7 (3")
VEH-PED 12CSC	A	6,6P	1	1					
	B	2,4	1	1	1				
	C	2,4	1	1	1	1			
	D	4 / 6	1 / 1				1 / 1		
PPB 3CSC	E	6,6P	1				1	1	1
	F	6	1				1	1	1
		TOTAL	5 / 2	3	2	1	2 / 2	1 / 1	1 / 1

AWG	CIRCUIT	1	2	3	4	5	6	7
#8	INTERSECTION LTG		2	2	2	2	2	
#8	HIGHWAY LIGHTING N					2	2	
#8	HIGHWAY LIGHTING S		2	2				
#8	SIGN LIGHTING		2	2	2	2		
#6	RAMP METERING		2	2		2	2	
#6	TMS					2		
#6	SIGNAL	2						
EVD		3	3	2	1			
CAMERA		1	1	1	1			
3CSC	METER ON SIGN							1
6 PAIR	SIC	1				1	1	
DETECTORS-TYPE B DLC								
PHASE								
Ø2		2	2	2				
Ø2 MID								
Ø2 ADV		2	2	2				
Ø4		7				7		
Ø4 ADV		3				3		
Ø6		2				2	2	2
Ø6 MID		1				1	1	
Ø6 ADV		2				2	2	
WB		4	4					
EB		4	4	4	4			
TOTAL		28	13	9	4	15	5	2

EMERGENCY VEHICLE DETECTOR SYSTEM (CITY)
CLOSED CIRCUIT TELEVISION SYSTEM (CITY)
LIGHTING (CITY STREET)
FIBER OPTIC SYSTEM (CITY)
MODIFY SIGNAL AND LIGHTING (LOCATION 2)

NO SCALE

E-30

APPROVED FOR ELECTRICAL WORK ONLY

STATE OF CALIFORNIA - DEPARTMENT OF TRANSPORTATION
Caltrans 06-ELECTRICAL DESIGN

FUNCTIONAL SUPERVISOR: ALI BAKHDOUD
CALCULATED-DESIGNED BY: HASHIM KHALID
CHECKED BY: OMAR MENDOZA
REVISED BY / DATE REVISED

LAST REVISION 12-08-11
DATE PLOTTED => 30-MAR-2012
TIME PLOTTED => 11:49

Dist	COUNTY	ROUTE	POST MILES TOTAL PROJECT	SHEET No.	TOTAL SHEETS
10	SJ	4,99	R19.5/R20.1, 15.0/18.6	855	1414

REGISTERED ELECTRICAL ENGINEER 12-07-11 DATE

3-26-12
PLANS APPROVAL DATE

REGISTERED PROFESSIONAL ENGINEER HASHIM KHALID No. 18054 Exp. 6/30/13 ELECTRICAL STATE OF CALIFORNIA

THE STATE OF CALIFORNIA OR ITS OFFICERS OR AGENTS SHALL NOT BE RESPONSIBLE FOR THE ACCURACY OR COMPLETENESS OF SCANNED COPIES OF THIS PLAN SHEET.

NOTES:

1. FOR NOTES AND SCHEDULES, SEE SHEET E-32.
2. FOR ACCURATE RIGHT OF WAY DATA, CONTACT RIGHT OF WAY ENGINEERING AT THE DISTRICT OFFICE.

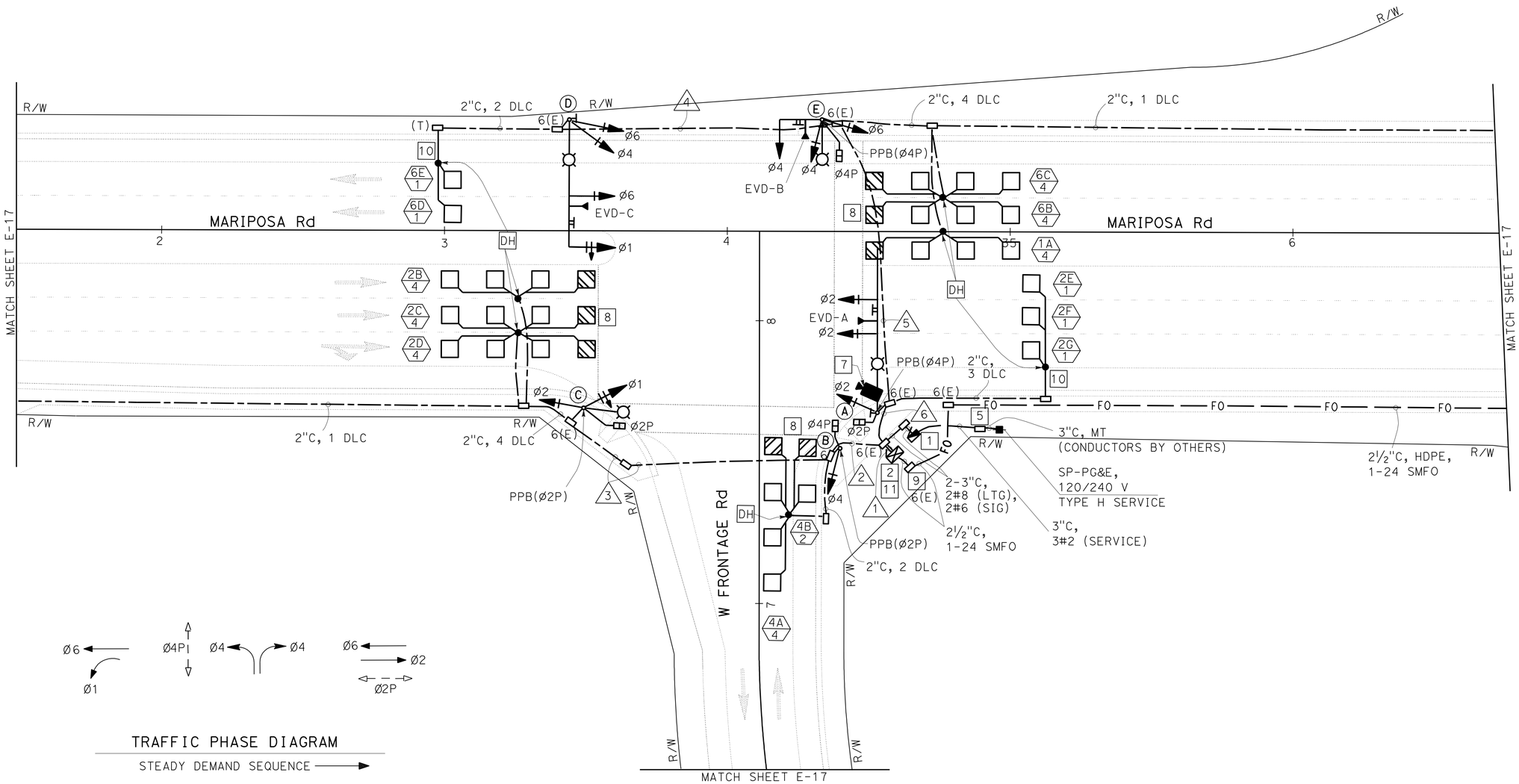

TRAFFIC PHASE DIAGRAM

STEADY DEMAND SEQUENCE →

FIBER OPTIC SYSTEM (CITY)
CLOSED CIRCUIT TELEVISION SYSTEM (CITY)
EMERGENCY VEHICLE DETECTOR SYSTEM (CITY)
SIGNAL AND LIGHTING (CITY STREET LOCATION 3)

APPROVED FOR ELECTRICAL WORK ONLY

SCALE: 1" = 20'

E-31

STATE OF CALIFORNIA - DEPARTMENT OF TRANSPORTATION
Caltrans 06-ELECTRICAL DESIGN

FUNCTIONAL SUPERVISOR: ALI BAKHDOUD
CALCULATED-DESIGNED BY: OMAR MENDOZA
CHECKED BY: HASHIM KHALID
REVISED BY
DATE REVISED

LAST REVISION DATE PLOTTED => 28-MAR-2012
12-08-11 TIME PLOTTED => 13:31

BORDER LAST REVISED 7/2/2010 | USERNAME => s121614 | DGN FILE => a3a100ua031.dgn | RELATIVE BORDER SCALE IS IN INCHES 0 1 2 3 | UNIT 1515 | PROJECT NUMBER & PHASE 10000004091

Dist	COUNTY	ROUTE	POST MILES TOTAL PROJECT	SHEET No.	TOTAL SHEETS
10	SJ	4,99	R19.5/R20.1, 15.0/18.6	856	1414

REGISTERED ELECTRICAL ENGINEER 12-07-11 DATE

3-26-12
PLANS APPROVAL DATE

REGISTERED PROFESSIONAL ENGINEER HASHIM KHALID No. 18054 Exp. 6/30/13 ELECTRICAL STATE OF CALIFORNIA

THE STATE OF CALIFORNIA OR ITS OFFICERS OR AGENTS SHALL NOT BE RESPONSIBLE FOR THE ACCURACY OR COMPLETENESS OF SCANNED COPIES OF THIS PLAN SHEET.

NOTES: (FOR SHEETS E-31 AND E-32)

1 120/240 V, 1Ø, 3-WIRE, TYPE III-AF SERVICE EQUIPMENT ENCLOSURE WITH THE FOLLOWING CIRCUIT BREAKERS:

CITY SERVICE

AMPERES	VOLTS	POLES	NAMEPLATE	METER	PHOTOELECTRIC CONTROL TYPE
100	240	2	MAIN BREAKER	YES	—
50	120	1	TRAFFIC SIGNAL	YES	—
30	240	2	INTERSECTION LIGHTING	NO	V
15	120	1	LIGHTING CONTROL	NO	—
20	120	1	SPARE	YES	—
—	—	6	SPACE	—	—

2 STATE-FURNISHED MODEL 2070N CONTROLLER ASSEMBLY. INSTALL STATE-FURNISHED 4-CHANNEL MULTIMODE PHASE SELECTOR AND HARNESS. REFER TO DETAILS A AND B ON SHEET E-48.

3 REFER TO SIGN PLANS FOR SIGN DETAILS. INSTALL CITY STREET NAME SIGN PER DETAIL B ON SHEET E-61.

4 NOT USED

5 PULL BOX PER UTILITY REQUIREMENTS.

6 STATE-FURNISHED EVD PER DETAIL C ON SHEET E-48 AND POLE DETAILS SES-3 AND SES-4.

7 STATE-FURNISHED CAMERA PER DETAIL A ON SHEET E-61 AND POLE DETAIL SES-3. INSTALLATION SHALL INCLUDE ALL MOUNTING HARDWARE, VIDEO, DATA, AND POWER CABLES, FIELD AND CENTRAL COMMUNICATION MODEMS (VIDEO/DATA) AND ASSOCIATED EQUIPMENT. CONTACT THE CITY OF STOCKTON TRAFFIC ENGINEERING AT (209-937-8411) PRIOR TO CAMERA INSTALLATION.

8 INSTALL INDUCTIVE LOOP PER DETECTORS DETAIL E1 AND E2 ON SHEET E-48.

9 PULL BOX PER DETAIL F ON SHEET E-48.

10 INSTALL A CONCRETE CAP AROUND THE HANDHOLE PER DETAIL D ON SHEET E-48.

11 TERMINATE FIBER DROP IN LIU PER DETAIL G ON SHEET E-48. CONTACT THE CITY OF STOCKTON TRAFFIC ENGINEERING AT (209) 937-8411 PRIOR TO FIBER SPLICING.

SENSOR TABLE

CH	DET	LOOP DETECTORS
1	1	1A (4)
2		2A (3)
3		
4		4A (4)
1	2	
2		6A (2)
3		4B (DELAY) (2)
4		2B (4)
1	3	2C (4)
2		2D (4)
3		6B (4)
4		6C (4)
1	4	2E (SAMPLER) (2)
2		2F (SAMPLER) (1)
3		2G (SAMPLER) (1)
4		6D (SAMPLER) (1)
1	5	6E (SAMPLER) (1)
2		
3		
4		

CONDUCTOR AND CONDUIT SCHEDULE

AWG	CIRCUIT	1	2	3	4	5	6
#14	Ø1 SIGNALS	6	3	3	3	3	3
	Ø2 SIGNALS	6	3	3			3
	Ø6 SIGNALS	6			3	6	6
	Ø4 SIGNALS	9	3		3	6	6
	Ø2 PED	4	2	2			2
	Ø4 PED	4	2			2	2
	Ø2 PPB	2	2	1			
	Ø4 PPB	2				1	2
	PPB COMMON	2	1	1		1	1
	SPARES	6	3	3	3	3	3
	TOTAL	47	19	13	12	22	28
#10	SIGNAL COMMON	2	1	1	1	1	1
#8	INTERSECTION LTG		2	2	2	2	2
#6	CONTROLLER	2					
EVC		3			1	2	3
	CAMERA	1					1
DLC	Ø1 DETECTORS	1				1	1
	Ø2 DETECTORS	7	4	4			3
	Ø6 DETECTORS	5			2	5	5
	Ø4 DETECTORS	2	2				
	TOTAL	15	6	4	2	6	9
CONDUIT SIZE (INCH)		2-4"	3"	3"	3"	3"	3"

POLE AND EQUIPMENT SCHEDULE

No.	STANDARD TYPE	STANDARD SMA	STANDARD LMA	VEH SIG MTG MAST ARM	VEH SIG MTG POLE Ø	VEH SIG MTG POLE	PED SIG MTG	PPB Ø	PPB ARROW	HPS LUM	SPECIAL REQUIREMENTS
A	61-5-100	60	15	MAS MAS	2	SV-1-T	SP-1-T	4	LEFT	200 W	F=20, INSTALL EVD-A, R3-4 AND D3-1 SIGN ON SMA. 3 6
B	1-B	-	-	-	4	TV-1-T	SP-1-T	2	RIGHT		
C	15TS	-	-	-	1,2	SV-2-T	SP-1-T	2	LEFT	200 W	
D	26-4-100	45	12	MAS MAS	6,4	SV-2-T	-	-	-	200 W	F=18, INSTALL EVD-C, R73-3(CA) AND D3-1 SIGN ON SMA. 3 6
E	17-3-100 (MODIFY)	15	12	MAS	6,4	SV-2-T	SP-1-T	4	RIGHT	200 W	INSTALL EVD-B, R3-4 AND D3-1 SIGN ON SMA. MOUNT LMA AT 90 DEGREE ANGLE FROM SMA. 3 6

FIBER OPTIC SYSTEM (CITY)
CLOSED CIRCUIT TELEVISION SYSTEM (CITY)
EMERGENCY VEHICLE DETECTOR SYSTEM (CITY)
SIGNAL AND LIGHTING (CITY STREET LOCATION 3)

APPROVED FOR ELECTRICAL WORK ONLY

NO SCALE

E-32

STATE OF CALIFORNIA - DEPARTMENT OF TRANSPORTATION
Caltrans 06-ELECTRICAL DESIGN

FUNCTIONAL SUPERVISOR: ALI BAKHDOUD
CALCULATED-DESIGNED BY: HASHIM KHALID
CHECKED BY: OMAR MENDOZA
REVISED BY / DATE REVISED

LAST REVISION 12-08-11
DATE PLOTTED => 28-MAR-2012
TIME PLOTTED => 13:31

Dist	COUNTY	ROUTE	POST MILES TOTAL PROJECT	SHEET No.	TOTAL SHEETS
10	SJ	4,99	R19.5/R20.1, 15.0/18.6	857	1414

REGISTERED ELECTRICAL ENGINEER 12-07-11 DATE

3-26-12
PLANS APPROVAL DATE

REGISTERED PROFESSIONAL ENGINEER HASHIM KHALID No. 18054 Exp. 6/30/13 ELECTRICAL STATE OF CALIFORNIA

THE STATE OF CALIFORNIA OR ITS OFFICERS OR AGENTS SHALL NOT BE RESPONSIBLE FOR THE ACCURACY OR COMPLETENESS OF SCANNED COPIES OF THIS PLAN SHEET.

NOTES:

1. FOR NOTES AND SCHEDULES, SEE SHEET E-34.
2. FOR ACCURATE RIGHT OF WAY DATA, CONTACT RIGHT OF WAY ENGINEERING AT THE DISTRICT OFFICE.

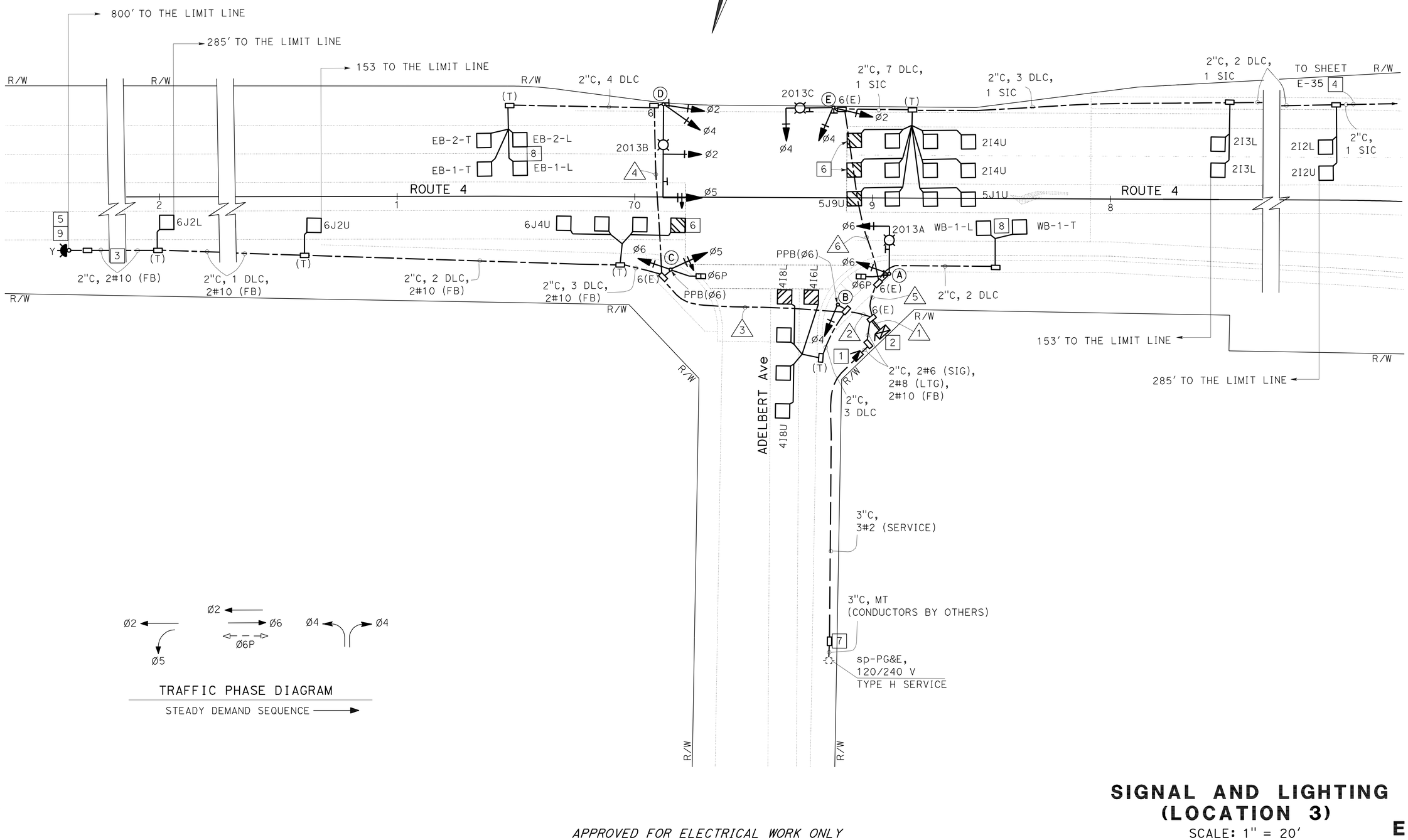

TRAFFIC PHASE DIAGRAM

STEADY DEMAND SEQUENCE

APPROVED FOR ELECTRICAL WORK ONLY

SIGNAL AND LIGHTING (LOCATION 3)

SCALE: 1" = 20'

E-33

STATE OF CALIFORNIA - DEPARTMENT OF TRANSPORTATION
Caltrans 06-ELECTRICAL DESIGN

FUNCTIONAL SUPERVISOR: ALI BAKHDOUD
CALCULATED-DESIGNED BY: HASHIM KHALID
CHECKED BY: OMAR MENDOZA
REVISED BY
DATE REVISED

LAST REVISION 12-08-11
DATE PLOTTED => 28-MAR-2012
TIME PLOTTED => 13:31

Dist	COUNTY	ROUTE	POST MILES TOTAL PROJECT	SHEET No.	TOTAL SHEETS
10	SJ	4,99	R19.5/R20.1, 15.0/18.6	858	1414

REGISTERED ELECTRICAL ENGINEER 12-07-11 DATE

3-26-12
PLANS APPROVAL DATE

REGISTERED PROFESSIONAL ENGINEER HASHIM KHALID No. 18054 Exp. 6/30/13 ELECTRICAL STATE OF CALIFORNIA

THE STATE OF CALIFORNIA OR ITS OFFICERS OR AGENTS SHALL NOT BE RESPONSIBLE FOR THE ACCURACY OR COMPLETENESS OF SCANNED COPIES OF THIS PLAN SHEET.

NOTES: (FOR SHEET E-33 AND SHEET E-34)

1. 120/240 V, 1Ø, 3-WIRE, TYPE III-CF SERVICE EQUIPMENT ENCLOSURE WITH THE FOLLOWING CIRCUIT BREAKERS:

CTID No. 10290040020130S

AMPERES	VOLTS	POLES	NAMEPLATE	METER	PHOTOELECTRIC CONTROL TYPE
100	240	2	MAIN BREAKER	YES	—
50	120	1	TRAFFIC SIGNAL	YES	—
15	120	1	FLASHING BEACON	YES	—
20	240	2	SPARE	YES	—
—	—	6	SPACE	—	—

CTID No. 10290040020130L

AMPERES	VOLTS	POLES	NAMEPLATE	METER	PHOTOELECTRIC CONTROL TYPE
100	240	2	MAIN BREAKER	YES	—
30	240	2	LIGHTING	YES	V
15	120	1	LIGHTING CONTROL	YES	—
20	240	2	SPARE	YES	—
—	—	6	SPACE	—	—

2. STATE-FURNISHED MODEL 2070 CONTROLLER ASSEMBLY AND BBS.
3. INSTALL No. 5(T) PULL BOXES AS NECESSARY TO MAINTAIN 200′ MAXIMUM SPACING.
4. 260′ TO PB LOCATED @ STATION 63+75. INSTALL No. 5 PULL BOXES AS NECESSARY TO MAINTAIN 200′ MAXIMUM SPACING.
5. REFER TO SIGN PLANS FOR SIGN DETAILS.
6. INDUCTIVE LOOP DETECTORS SHALL BE CONNECTED IN A PULL BOX AS SHOWN IN DETAIL A, WITH 10′ LOOP SPACING AND 1′ SET BACK FROM STOP BAR.
7. PULL BOX PER UTILITY REQUIREMENTS.
8. INDUCTIVE LOOP DETECTORS SHALL BE SPACED 20′ LEADING EDGE TO LEADING EDGE, COIL 6′ OF DLC IN CABINET.
9. TYPE 15-FBS AND FLASHING BEACON CONTROL ASSEMBLY.

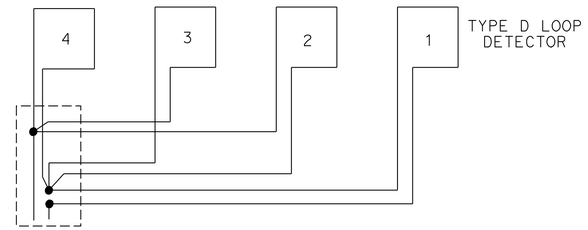

TYPICAL LOOP CONNECTIONS
(DASHED LINES REPROSENT THE PULL BOX)

DETAIL A

POLE AND EQUIPMENT SCHEDULE

No.	STANDARD TYPE	STANDARD SMA	STANDARD LMA	VEH SIG MTG MAST ARM	VEH SIG MTG POLE	PED SIG MTG	PPB Ø	PPB ARROW	HPS LUM	SPECIAL REQUIREMENTS
A	17-3-100	20	12	MAS	SV-1-T	SP-1-T			200 W	INSTALL R3-4 AND D3-1 SIGN ON SMA. [5]
B	1-A				TV-1-T		6	→		
C	1-A				TV-2-T	SP-1-T	6	←		
D	26-4-100	40	15	MAS MAS	SV-2-T				200 W	F=18, INSTALL R73-3(CA) AND D3-1 SIGN ON SMA. [5]
E	17-3-100	20	12	MAS	SV-2-T				200 W	INSTALL R3-4 AND D3-1 SIGN ON SMA. [5]

CONDUCTOR AND CONDUIT SCHEDULE

CONDUCTOR DESIGNATION			CONDUIT RUN NUMBER AND SIZE					
CABLE TYPE	POLE	PHASE	1	2	3	4	5	6
			2-3"	3"	3"	3"	3"	3"
VEH-PED 12CSC	A	6,6P	1				1	
	B	4 / 6	1 / 1	1 / 1				
	C	5,6,6P / 6	1 / 1	1 / 1	1 / 1			
PPB 3CSC	D	2,4,5	2	2	2	2		
	E	2,4	1				1	1
		TOTAL	6 / 2	4 / 2	3 / 1	2	2	1
AWG		CIRCUIT						
#8		LIGHTING		2	2	2	2	2
6 PAIR		SIC	1				1	1
#10		FLASHING BEACON		2	2			
DETECTORS-TYPE B DLC								
PHASE								
Ø2			2				2	2
Ø2 MID			1				1	1
Ø2 ADV			2				2	2
Ø4			3	3				
Ø5			2				2	2
Ø6			1	1	1			
Ø6 MID			1	1	1			
Ø6 ADV			1	1	1			
WB			2				2	
EB			4	4	4	4		
TOTAL			9	10	7	4	9	7

APPROVED FOR ELECTRICAL WORK ONLY

SIGNAL AND LIGHTING (LOCATION 3)

NO SCALE

E-34

STATE OF CALIFORNIA - DEPARTMENT OF TRANSPORTATION
Caltrans 06-ELECTRICAL DESIGN

FUNCTIONAL SUPERVISOR: ALI BAKHDOUD
CALCULATED-DESIGNED BY: HASHIM KHALID
CHECKED BY: OMAR MENDOZA
REVISED BY
DATE REVISED

LAST REVISION 12-08-11
DATE PLOTTED => 30-MAR-2012
TIME PLOTTED => 11:27

Dist	COUNTY	ROUTE	POST MILES TOTAL PROJECT	SHEET No.	TOTAL SHEETS
10	SJ	4,99	R19.5/R20.1, 15.0/18.6	859	1414

REGISTERED ELECTRICAL ENGINEER 12-07-11 DATE

3-26-12
PLANS APPROVAL DATE

REGISTERED PROFESSIONAL ENGINEER HASHIM KHALID No. 18054 Exp. 6/30/13 ELECTRICAL STATE OF CALIFORNIA

THE STATE OF CALIFORNIA OR ITS OFFICERS OR AGENTS SHALL NOT BE RESPONSIBLE FOR THE ACCURACY OR COMPLETENESS OF SCANNED COPIES OF THIS PLAN SHEET.

NOTES:

1. FOR NOTES AND SCHEDULES, SEE SHEET E-36.
2. FOR ACCURATE RIGHT OF WAY DATA, CONTACT RIGHT OF WAY ENGINEERING AT THE DISTRICT OFFICE.

RAILROAD PREEMPTION PHASE DIAGRAM
PHASE 8 TRACK CLEARANCE GREEN/LIMITED SERVICE PHASE 2 AND 6

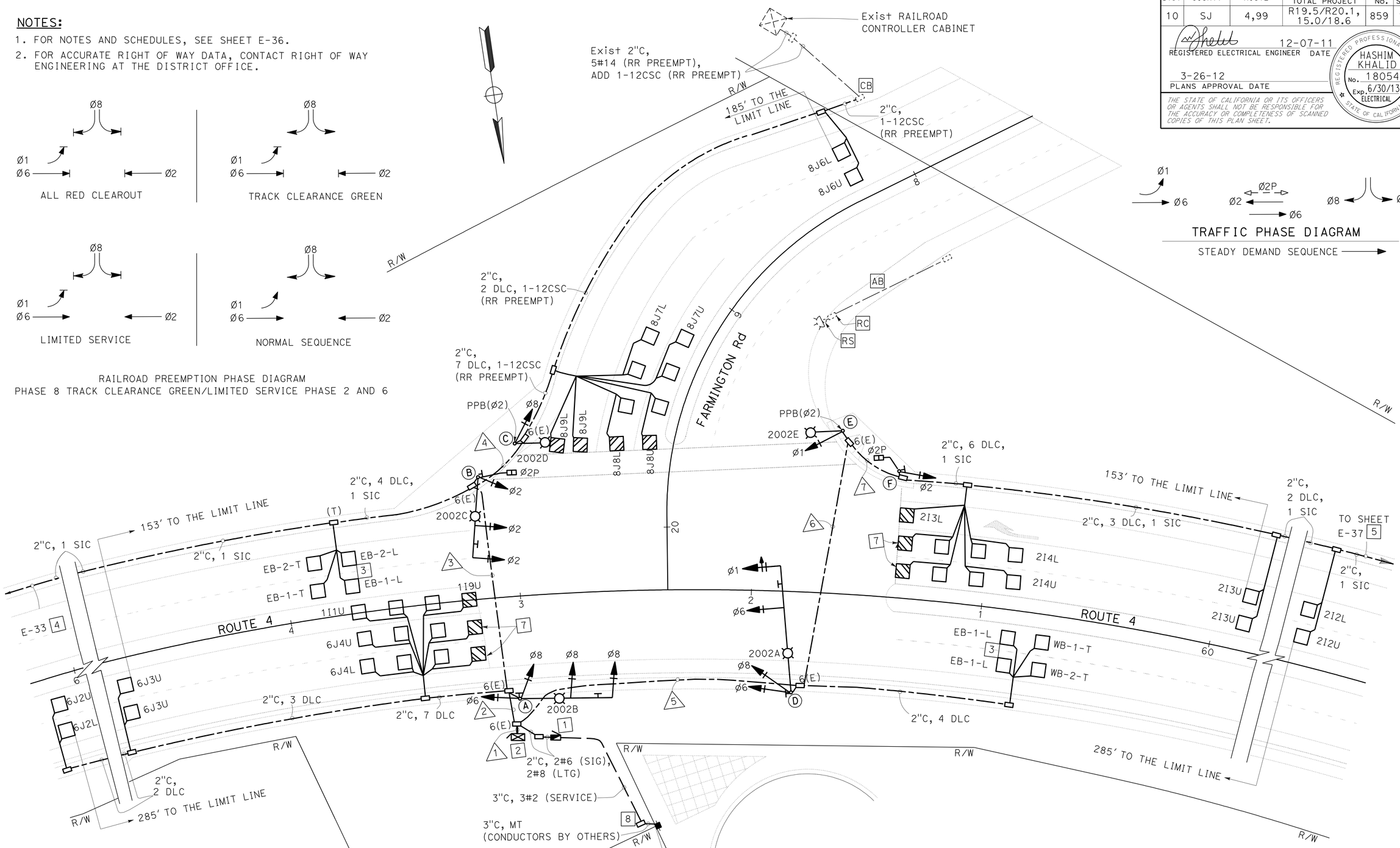

TRAFFIC PHASE DIAGRAM
STEADY DEMAND SEQUENCE

APPROVED FOR ELECTRICAL WORK ONLY

SIGNAL AND LIGHTING (LOCATION 4)

SCALE: 1" = 20'

E-35

STATE OF CALIFORNIA - DEPARTMENT OF TRANSPORTATION
Caltrans 06-ELECTRICAL DESIGN

FUNCTIONAL SUPERVISOR: ALI BAKHDOUD
CALCULATED-DESIGNED BY: HASHIM KHALID
CHECKED BY: OMAR MENDOZA
REVISED BY
DATE REVISED

LAST REVISION DATE PLOTTED => 28-MAR-2012
12-08-11 TIME PLOTTED => 13:31

BORDER LAST REVISED 7/2/2010 | USERNAME => s121614 | DGN FILE => a3a100ua035.dgn | RELATIVE BORDER SCALE IS IN INCHES 0 1 2 3 | UNIT 1515 | PROJECT NUMBER & PHASE 10000004091

Dist	COUNTY	ROUTE	POST MILES TOTAL PROJECT	SHEET No.	TOTAL SHEETS
10	SJ	4,99	R19.5/R20.1, 15.0/18.6	860	1414

REGISTERED ELECTRICAL ENGINEER 12-07-11 DATE

3-26-12
PLANS APPROVAL DATE

REGISTERED PROFESSIONAL ENGINEER HASHIM KHALID No. 18054 Exp. 6/30/13 ELECTRICAL STATE OF CALIFORNIA

THE STATE OF CALIFORNIA OR ITS OFFICERS OR AGENTS SHALL NOT BE RESPONSIBLE FOR THE ACCURACY OR COMPLETENESS OF SCANNED COPIES OF THIS PLAN SHEET.

NOTES: (FOR SHEET E-35 AND E-36)

1. 120/240 V, 1Ø, 3-WIRE, TYPE III-CF SERVICE EQUIPMENT ENCLOSURE WITH THE FOLLOWING CIRCUIT BREAKERS:

CTID No. 10290040020020S

AMPERES	VOLTS	POLES	NAMEPLATE	METER	PHOTOELECTRIC CONTROL TYPE
100	240	2	MAIN BREAKER	YES	——
50	120	1	TRAFFIC SIGNAL	YES	——
20	240	2	SPARE	YES	——
——	——	6	SPACE	——	——

CTID No. 10290040020020L

AMPERES	VOLTS	POLES	NAMEPLATE	METER	PHOTOELECTRIC CONTROL TYPE
100	240	2	MAIN BREAKER	YES	——
30	240	2	LIGHTING	YES	V
15	120	1	LIGHTING CONTROL	YES	——
30	240	2	SPARE	YES	——
——	——	6	SPACE	——	——

2. STATE-FURNISHED MODEL 2070 CONTROLLER ASSEMBLY AND BBS.
3. INDUCTIVE LOOP DETECTORS SHALL BE SPACED 20′ LEADING EDGE TO LEADING EDGE, COIL 6′ OF DLC IN CABINET.
4. 100′ TO PB LOCATED @ STATION 67+00. INSTALL No. 5 PULL BOXES AS NECESSARY TO MAINTAIN 200′ MAXIMUM SPACING.
5. 700′ TO PB LOCATED @ STATION 51+85. INSTALL No. 5 PULL BOXES AS NECESSARY TO MAINTAIN 200′ MAXIMUM SPACING.
6. REFER TO SIGN PLANS FOR SIGN DETAILS.
7. INDUCTIVE LOOP DETECTORS SHALL BE CONNECTED IN A PULL BOX AS SHOWN IN DETAIL A, WITH 10′ LOOP SPACING AND 1′ SET BACK FROM STOP BAR.
8. PULL BOX PER UTILITY REQUIREMENTS.

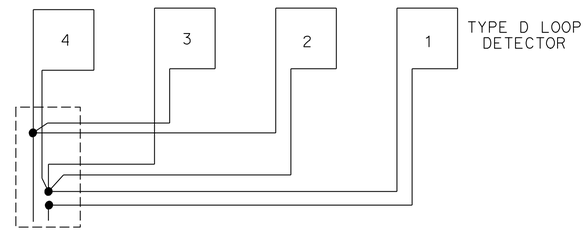

TYPICAL LOOP CONNECTIONS
(DASHED LINES REPRESENT THE PULL BOX)

DETAIL A

POLE AND EQUIPMENT SCHEDULE

No.	STANDARD TYPE	STANDARD SMA	STANDARD LMA	VEH SIG MTG MAST ARM	VEH SIG MTG POLE	PED SIG MTG	PPB Ø	PPB ARROW	HPS LUM	SPECIAL REQUIREMENTS
A	26-4-100	40	15	MAS MAS	SV-2-T				200 W	F=18, INSTALL R61-26(CA) AND D3-2 SIGN ON SMA. [6]
B	24-4-100	35	15	MAS MAS	SV-1-T	SP-1-T			200 W	F=14, INSTALL R3-4 AND D3-1 SIGN ON SMA. [6]
C	15TS		15		SV-1-T		2	→	200 W	
D	29-5-100	55	15	MAS MAS	SV-2-DT				200 W	F=18, INSTALL R73-3(CA) AND D3-1 SIGN ON SMA. [6]
E	15TS		15		SV-1-T		2	←	200 W	
F	1-A				TV-1-T	SP-1-T				INSTALL R10-11 SIGN ON SIGNAL POLE.

CONDUCTOR AND CONDUIT SCHEDULE

CABLE TYPE	POLE	PHASE	1 (2-3")	2 (3")	3 (3")	4 (3")	5 (3")	6 (3")	7 (3")
VEH-PED 12CSC	A	6,8	1	1					
	B	2,2P	1	1	1				
	C	8 / 2	1 / 1	1 / 1	1 / 1	1 / 1			
	D	1,6,8	1				1		
	E	1 / 2	1 / 1				1 / 1	1 / 1	
PPB 3CSC	F	2,2P	1				1	1	1
		TOTAL	6 / 2	3 / 1	2 / 1	1 / 1	3 / 1	2 / 1	1 /
AWG		CIRCUIT							
#8		LIGHTING		2	2	2	2	2	
#6		SIGNAL	2						
6 PAIR		SIC	2	1	1		1	1	1
1-12CSC		RR PREEMPTION	1	1	1	1			
DETECTORS-TYPE B DLC									
PHASE									
Ø1			2	2					
Ø2			3				3	3	3
Ø2 MID			1				1	1	1
Ø2 ADV			2				2	2	2
Ø6			2	2					
Ø6 MID			1	1					
Ø6 ADV			2	2					
Ø8			5	5	5	5			
Ø8 ADV			2	2	2	2			
WB			4				4		
EB			4	4	4				
TOTAL			28	18	11	7	10	6	6

APPROVED FOR ELECTRICAL WORK ONLY

SIGNAL AND LIGHTING (LOCATION 4)

NO SCALE

E-36

REVISED BY | DATE REVISED
HASHIM KHALID | OMAR MENDOZA
CALCULATED-DESIGNED BY | CHECKED BY
FUNCTIONAL SUPERVISOR: ALI BAKHDOUD
STATE OF CALIFORNIA - DEPARTMENT OF TRANSPORTATION
Caltrans 06-ELECTRICAL DESIGN

LAST REVISION 12-08-11 | DATE PLOTTED => 28-MAR-2012 | TIME PLOTTED => 13:32

Dist	COUNTY	ROUTE	POST MILES TOTAL PROJECT	SHEET No.	TOTAL SHEETS
10	SJ	4,99	R19.5/R20.1, 15.0/18.6	861	1414

REGISTERED ELECTRICAL ENGINEER 12-07-11 DATE

3-26-12
PLANS APPROVAL DATE

REGISTERED PROFESSIONAL ENGINEER HASHIM KHALID No. 18054 Exp. 6/30/13 ELECTRICAL STATE OF CALIFORNIA

THE STATE OF CALIFORNIA OR ITS OFFICERS OR AGENTS SHALL NOT BE RESPONSIBLE FOR THE ACCURACY OR COMPLETENESS OF SCANNED COPIES OF THIS PLAN SHEET.

NOTES:

1. FOR NOTES AND SCHEDULES, SEE SHEET E-38.
2. FOR ACCURATE RIGHT OF WAY DATA, CONTACT RIGHT OF WAY ENGINEERING AT THE DISTRICT OFFICE.

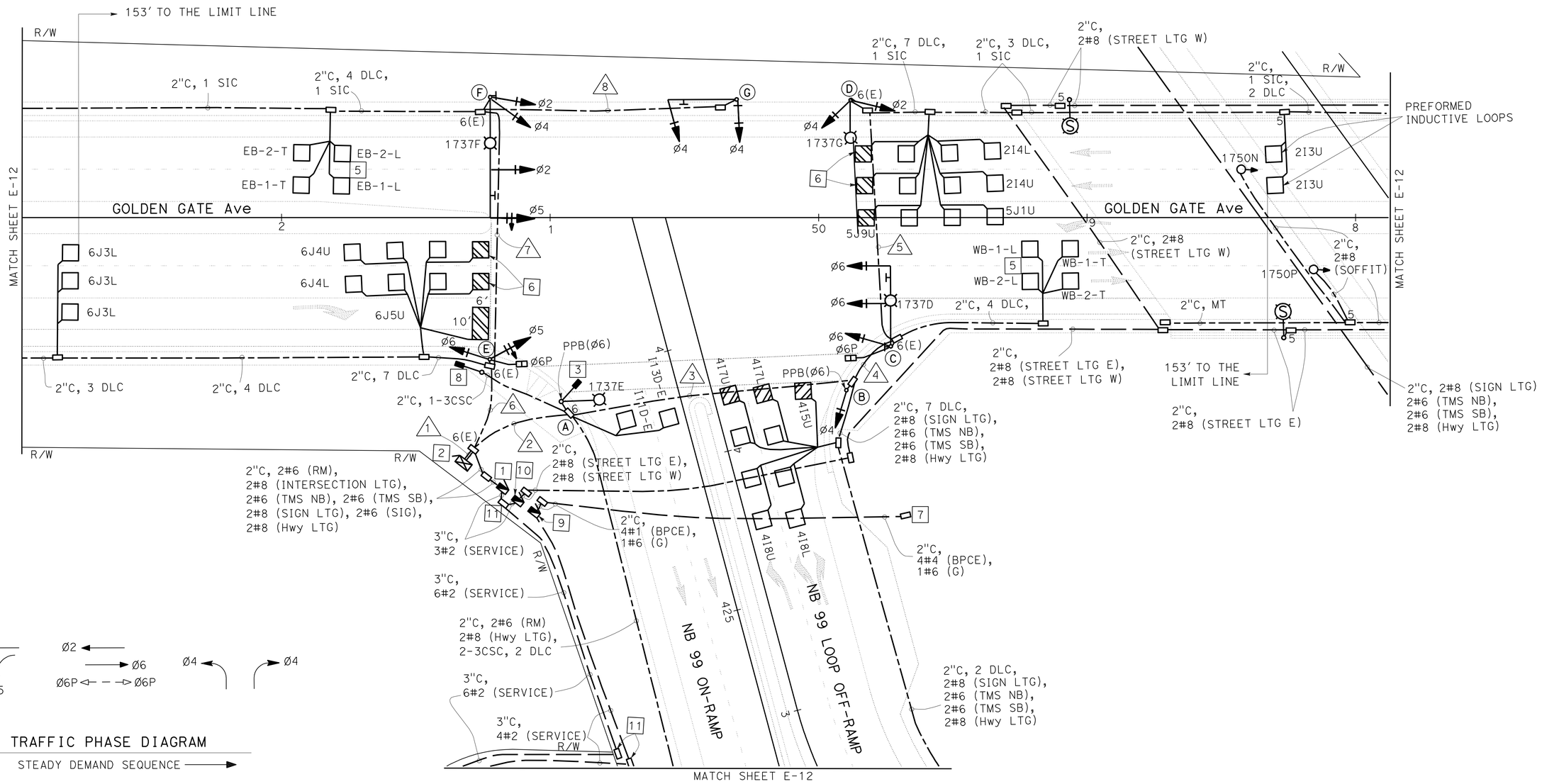

SIGNAL AND LIGHTING (LOCATION 5)

SCALE: 1" = 20'

E-37

APPROVED FOR ELECTRICAL WORK ONLY

STATE OF CALIFORNIA - DEPARTMENT OF TRANSPORTATION
Caltrans 06-ELECTRICAL DESIGN

FUNCTIONAL SUPERVISOR: ALI BAKHDOUD
CALCULATED-DESIGNED BY: HASHIM KHALID
CHECKED BY: OMAR MENDOZA
REVISED BY
DATE REVISED

LAST REVISION DATE PLOTTED => 28-MAR-2012
12-08-11 TIME PLOTTED => 13:32

BORDER LAST REVISED 7/2/2010
USERNAME => s121614
DGN FILE => a3a100ua037.dgn
RELATIVE BORDER SCALE IS IN INCHES 0 1 2 3
UNIT 1515
PROJECT NUMBER & PHASE 10000004091

Dist	COUNTY	ROUTE	POST MILES TOTAL PROJECT	SHEET No.	TOTAL SHEETS
10	SJ	4,99	R19.5/R20.1, 15.0/18.6	862	1414

REGISTERED ELECTRICAL ENGINEER 12-07-11 DATE

3-26-12
PLANS APPROVAL DATE

REGISTERED PROFESSIONAL ENGINEER HASHIM KHALID No. 18054 Exp. 6/30/13 ELECTRICAL STATE OF CALIFORNIA

THE STATE OF CALIFORNIA OR ITS OFFICERS OR AGENTS SHALL NOT BE RESPONSIBLE FOR THE ACCURACY OR COMPLETENESS OF SCANNED COPIES OF THIS PLAN SHEET.

NOTES: (FOR SHEET E-37 AND E-38)

1 120/240 V, 1Ø, 3-WIRE, TYPE III-CF SERVICE EQUIPMENT ENCLOSURE WITH THE FOLLOWING CIRCUIT BREAKERS:

CTID No. 10290990017370S

AMPERES	VOLTS	POLES	NAMEPLATE	METER	PHOTOELECTRIC CONTROL TYPE
100	240	2	MAIN BREAKER	YES	——
50	120	1	TRAFFIC SIGNAL	YES	——
30	120	1	RAMP METERING	YES	——
30	120	1	TMS NB	YES	——
30	120	1	TMS SB	YES	——
20	240	2	SPARE	YES	——
——	——	6	SPACE	——	——

CTID No. 10290990017370L

AMPERES	VOLTS	POLES	NAMEPLATE	METER	PHOTOELECTRIC CONTROL TYPE
100	240	2	MAIN BREAKER	YES	——
30	240	2	INTERSECTION LIGHTING	YES	V
30	240	2	HIGHWAY LIGHTING	YES	V
30	240	2	SIGN LIGHTING	YES	LC3
15	120	1	LIGHTING CONTROL	YES	——
20	240	2	SPARE	YES	——
——	——	6	SPACE	——	——

2 STATE-FURNISHED MODEL 2070 CONTROLLER ASSEMBLY AND BBS.

3 INSTALL "METER ON" HEAD ON TYPE 15TS AT 7′ HEIGHT PER DETAIL F ON SHEET E-47.

4 REFER TO SIGN PLANS FOR SIGN DETAILS.

5 INDUCTIVE LOOP DETECTORS SHALL BE SPACED 20′ LEADING EDGE TO LEADING EDGE, COIL 6′ OF DLC IN CABINET.

6 INDUCTIVE LOOP DETECTORS SHALL BE CONNECTED IN A PULL BOX AS SHOWN IN DETAIL A, WITH 10′ LOOP SPACING AND 1′ SET BACK FROM STOP BAR.

7 COIL 50′ OF ALL CONDUCTORS IN PB FOR FUTURE CONNECTION.

8 TYPE 1-A SIGNAL STANDARD PER DETAIL E ON SHEET E-47.

9 120/240 V, 3Ø , 4-WIRE TYPE III-DF SERVICE EQUIPMENT ENCLOSURE WITH THE FOLLOWING CIRCUIT BREAKERS.

CTID No. 10290990017371

AMPERES	VOLTS	POLES	NAMEPLATE	METER	PHOTOELECTRIC CONTROL TYPE
100	240	3	MAIN BREAKER	YES	——
80	240	3	BOOSTER PUMP	YES	——
30	240	2	SPARE	YES	——
——	——	6	SPACE	——	——

10 120/240 V, 1Ø, 3-WIRE, TYPE III-AF SERVICE EQUIPMENT ENCLOSURE FOR CITY LIGHTING WITH THE FOLLOWING CIRCUIT BREAKERS:

CITY SERVICE

AMPERES	VOLTS	POLES	NAMEPLATE	METER	PHOTOELECTRIC CONTROL TYPE
100	240	3	MAIN BREAKER	NO	——
30	240	2	STREET LIGHTING E	NO	V
30	240	2	STREET LIGHTING W	NO	V
15	120	1	LIGHTING CONTROL	NO	——
20	120	1	SPARE	NO	——
——	——	6	SPACE	——	——

11 PULL BOX PER UTILITY REQUIREMENTS.

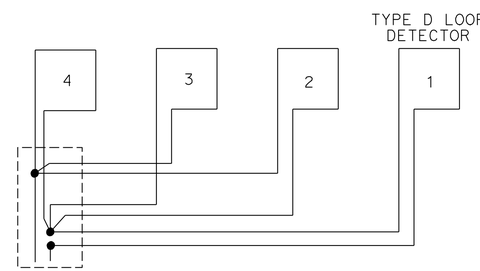

TYPICAL LOOP CONNECTIONS
(DASHED LINES REPRESENT THE PULL BOX)

DETAIL A

POLE AND EQUIPMENT SCHEDULE

No.	STANDARD TYPE	STANDARD SMA	STANDARD LMA	VEH SIG MTG MAST ARM	VEH SIG MTG POLE	PED SIG MTG	PPB Ø	PPB ARROW	HPS LUM	SPECIAL REQUIREMENTS
A	15TS						6	←	200 W	
B	1-A				TV-1-T		6	→		
C	19-4-100	30	15	MAS MAS	SV-1-T	SP-1-T			200 W	F=14, INSTALL R4-3 SIGN ON SMA. 4
D	15TS				SV-2-T				200 W	
E	1-A				TV-2-T	SP-1-T				
F	26-4-100	45	15	MAS MAS	SV-2-TB				200 W	F=18, INSTALL R73-3(CA) SIGN ON SMA. 4
G	18-4-100	25		MAS	SV-1-T					INSTALL R61-9(CA) AND D3-1 SIGN ON SMA. INSTALL R9-3a SIGN ON SIGNAL POLE. 4

CONDUCTOR AND CONDUIT SCHEDULE

CONDUCTOR DESIGNATION: CABLE TYPE	POLE	PHASE	CONDUIT RUN NUMBER AND SIZE: 1 (2-3")	2 (3")	3 (3")	4 (3")	5 (3")	6 (3")	7 (3")	8 (3")
VEH-PED 12CSC	A	6	1	1						
	B	4 / 6	1 / 1	1 / 1	1 / 1					
	C	6,6P	1	1	1	1				
	D	2,4	1	1	1	1	1			
	E	5,6,6P	1					1		
PPB 3CSC	F	2,4,5	2					2	2	
	G	4	1					1	1	1
		TOTAL	7 / 2	3 / 2	3 / 1	2	1	4	3	1

AWG	CIRCUIT	1	2	3	4	5	6	7	8
#8	INTERSECTION LIGHTING		2	2	2	2	2	2	
#8	HIGHWAY LIGHTING		2	2					
#8	SIGN LIGHTING		2	2					
#6	TMS NB		2	2					
#6	TMS SB		2	2					
#6	RMS		2						
#6	SIGNAL	2							
6 PAIR	SIC	2	1	1	1	1	1	1	
DETECTORS-TYPE B DLC									
PHASE									
Ø2		2	2	2	2	2			
Ø2 MID		1	1	1	1	1			
Ø2 ADV		2	2	2	2	2			
Ø4		5	5	5					
Ø4 ADV		2	2	2					
Ø5		2	2	2	2	2			
Ø6		3					3		
Ø6 MID		1					1		
Ø6 ADV		3					3		
WB		4	4	4	4				
EB		4					4	4	
TOTAL		29	18	18	11	7	11	4	

APPROVED FOR ELECTRICAL WORK ONLY

SIGNAL AND LIGHTING (LOCATION 5)

NO SCALE

E-38

STATE OF CALIFORNIA - DEPARTMENT OF TRANSPORTATION
Caltrans 06-ELECTRICAL DESIGN

FUNCTIONAL SUPERVISOR: ALI BAKHDOUD
CALCULATED-DESIGNED BY: OMAR MENDOZA
CHECKED BY: HASHIM KHALID
REVISED BY / DATE REVISED

LAST REVISION 12-08-11
DATE PLOTTED => 30-MAR-2012
TIME PLOTTED => 11:27

Dist	COUNTY	ROUTE	POST MILES TOTAL PROJECT	SHEET No.	TOTAL SHEETS
10	SJ	4,99	R19.5/R20.1, 15.0/18.6	863	1414

REGISTERED ELECTRICAL ENGINEER 12-07-11 DATE

3-26-12
PLANS APPROVAL DATE

REGISTERED PROFESSIONAL ENGINEER HASHIM KHALID No. 18054 Exp. 6/30/13 ELECTRICAL STATE OF CALIFORNIA

THE STATE OF CALIFORNIA OR ITS OFFICERS OR AGENTS SHALL NOT BE RESPONSIBLE FOR THE ACCURACY OR COMPLETENESS OF SCANNED COPIES OF THIS PLAN SHEET.

NOTES:

1. FOR NOTES AND SCHEDULES, SEE SHEET E-40.
2. FOR ACCURATE RIGHT OF WAY DATA, CONTACT RIGHT OF WAY ENGINEERING AT THE DISTRICT OFFICE.

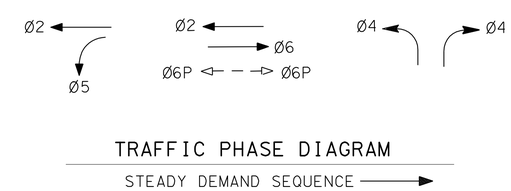

TRAFFIC PHASE DIAGRAM

STEADY DEMAND SEQUENCE

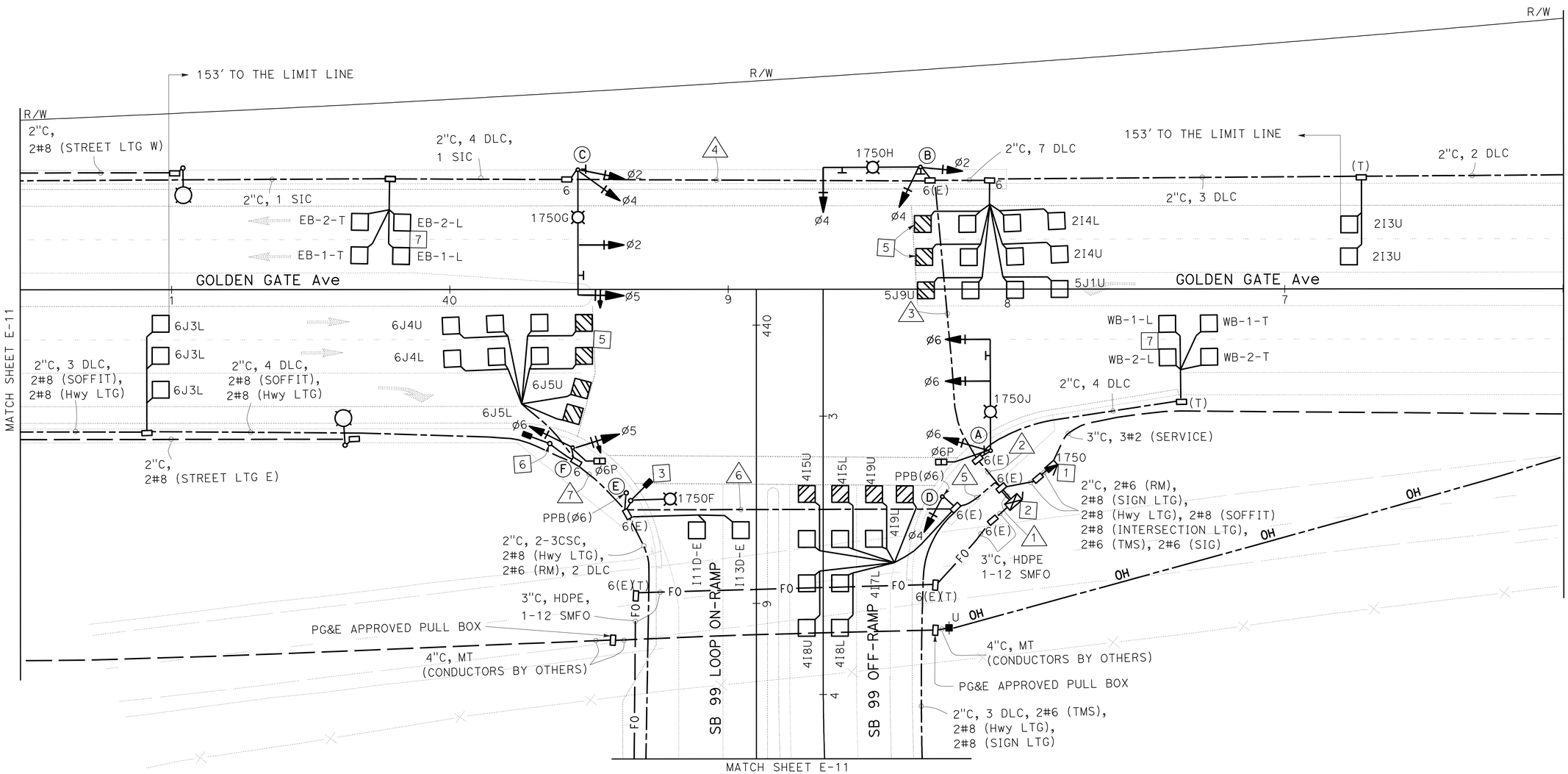

SIGNAL AND LIGHTING (LOCATION 6)

SCALE: 1" = 20'

E-39

APPROVED FOR ELECTRICAL WORK ONLY

STATE OF CALIFORNIA - DEPARTMENT OF TRANSPORTATION
Caltrans 06-ELECTRICAL DESIGN

FUNCTIONAL SUPERVISOR: ALI BAKHDOUD
CALCULATED-DESIGNED BY: OMAR MENDOZA
CHECKED BY: HASHIM KHALID
REVISED BY
DATE REVISED

LAST REVISION 12-08-11 | DATE PLOTTED => 28-MAR-2012 | TIME PLOTTED => 13:32

Dist	COUNTY	ROUTE	POST MILES TOTAL PROJECT	SHEET No.	TOTAL SHEETS
10	SJ	4,99	R19.5/R20.1, 15.0/18.6	864	1414

REGISTERED ELECTRICAL ENGINEER 12-07-11 DATE

3-26-12
PLANS APPROVAL DATE

REGISTERED PROFESSIONAL ENGINEER HASHIM KHALID No. 18054 Exp. 6/30/13 ELECTRICAL STATE OF CALIFORNIA

THE STATE OF CALIFORNIA OR ITS OFFICERS OR AGENTS SHALL NOT BE RESPONSIBLE FOR THE ACCURACY OR COMPLETENESS OF SCANNED COPIES OF THIS PLAN SHEET.

NOTES: (FOR SHEET E-39 AND E-40)

1 120/240 V, 1Ø, 3-WIRE, TYPE III-CF SERVICE EQUIPMENT ENCLOSURE WITH THE FOLLOWING CIRCUIT BREAKERS:

CTID No. 10290990017500S

AMPERES	VOLTS	POLES	NAMEPLATE	METER	PHOTOELECTRIC CONTROL TYPE
100	240	2	MAIN BREAKER	YES	——
50	120	1	TRAFFIC SIGNAL	YES	——
30	120	1	RAMP METERING	YES	——
30	120	1	TMS	YES	——
20	240	2	SPARE	YES	——
——	——	6	SPACE	——	——

CTID No. 10290990017500L

AMPERES	VOLTS	POLES	NAMEPLATE	METER	PHOTOELECTRIC CONTROL TYPE
100	240	2	MAIN BREAKER	YES	——
30	240	2	INTERSECTION LIGHTING	YES	V
30	240	2	HIGHWAY LIGHTING	YES	V
30	240	2	SIGN LIGHTING	YES	LC3
15	120	1	LIGHTING CONTROL	YES	——
30	120	1	SOFFIT LIGHTING	YES	V
20	240	2	SPARE	YES	——
——	——	6	SPACE	——	——

2 STATE-FURNISHED MODEL 2070 CONTROLLER ASSEMBLY AND BBS.

3 "METER ON" HEAD ON TYPE 15TS AT 7′ HEIGHT PER DETAIL F ON SHEET E-47.

4 REFER TO SIGN PLANS FOR SIGN DETAILS.

5 INDUCTIVE LOOP DETECTORS SHALL BE CONNECTED IN A PULL BOX AS SHOWN IN DETAIL A, WITH 10′ LOOP SPACING AND 1′ SET BACK FROM STOP BAR.

6 TYPE 1-A SIGNAL STANDARD PER DETAIL E ON SHEET E-47.

7 INDUCTIVE LOOP DETECTORS SHALL BE SPACED 20′ LEADING EDGE TO LEADING EDGE. COIL 6′ OF DLC IN CABINET.

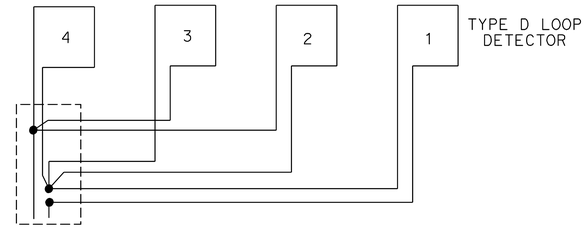

TYPICAL LOOP CONNECTIONS
(DASHED LINES REPRESENT THE PULL BOX)

DETAIL A

POLE AND EQUIPMENT SCHEDULE

No.	STANDARD TYPE	STANDARD SMA	STANDARD LMA	VEH SIG MTG MAST ARM	VEH SIG MTG POLE	PED SIG MTG	PPB Ø	PPB ARROW	HPS LUM	SPECIAL REQUIREMENTS
A	26-4-100	40	12	MAS MAS	SV-1-T	SP-1-T			200 W	F=15, INSTALL R3-4 SIGN ON SMA. [4]
B	24-4-100	35	12	MAS	SV-2-T				200 W	INSTALL R61-13(CA) AND D3-1 SIGN ON SMA. [4]
C	26-4-100	45	15	MAS MAS	SV-2-T				200 W	F=18, INSTALL R73-3(CA) SIGN ON SMA. INSTALL R9-3a SIGN ON SIGNAL POLE. [4]
D	1-A				TV-1-T		6	→		
E	PPB POLE						6	←		
F	1-A				TV-2-T	SP-1-T				

CONDUCTOR AND CONDUIT SCHEDULE

CONDUCTOR DESIGNATION			CONDUIT RUN NUMBER AND SIZE						
CABLE TYPE	POLE	PHASE	1 (2-3")	2 (3")	3 (3")	4 (3")	5 (3")	6 (3")	7 (3")
VEH-PED 12CSC	A	6,6P	1	1					
	B	2,4	1	1	1				
	C	2,4,5	2	2	2	2			
	D	4 / 6	1 / 1				1 / 1		
	E	6	1				1	1	
PPB 3CSC	F	5,6,6P	1				1	1	1
		TOTAL	6 / 2	4	3	2	2 / 2	1 / 1	1
AWG		CIRCUIT							
#8		INTERSECTION LIGHTING		2	2	2	2	2	
#8		HIGHWAY LIGHTING					2	2	2
#8		SIGN LIGHTING					2		
#6		RMS					2	2	
#6		TMS					2		
#6		SIGNAL	1						
#8		SOFFIT					2	2	2
6 PAIR		SIC	1	1	1	1			
DETECTORS-TYPE B DLC									
PHASE									
Ø2			2	2	2				
Ø2 MID			1	1	1				
Ø2 ADV			2	2	2				
Ø4			7				7		
Ø4 ADV			3				3		
Ø5			2	2	2				
Ø6			4				4	4	4
Ø6 MID			1				1	1	1
Ø6 ADV			3				3	3	3
WB			4	4					
EB			4	4	4	4			
TOTAL			33	15	11	4	18	8	8

SIGNAL AND LIGHTING (LOCATION 6)

NO SCALE

E-40

APPROVED FOR ELECTRICAL WORK ONLY

STATE OF CALIFORNIA - DEPARTMENT OF TRANSPORTATION
Caltrans 06-ELECTRICAL DESIGN

FUNCTIONAL SUPERVISOR: ALI BAKHDOUD
CALCULATED-DESIGNED BY: HASHIM KHALID
CHECKED BY: OMAR MENDOZA
REVISED BY
DATE REVISED

LAST REVISION 12-08-11 | DATE PLOTTED => 29-MAR-2012 | TIME PLOTTED => 17:44

Dist	COUNTY	ROUTE	POST MILES TOTAL PROJECT	SHEET No.	TOTAL SHEETS
10	SJ	4,99	R19.5/R20.1, 15.0/18.6	865	1414

REGISTERED ELECTRICAL ENGINEER 12-07-11 DATE

3-26-12
PLANS APPROVAL DATE

REGISTERED PROFESSIONAL ENGINEER HASHIM KHALID No. 18054 Exp. 6/30/13 ELECTRICAL STATE OF CALIFORNIA

THE STATE OF CALIFORNIA OR ITS OFFICERS OR AGENTS SHALL NOT BE RESPONSIBLE FOR THE ACCURACY OR COMPLETENESS OF SCANNED COPIES OF THIS PLAN SHEET.

NOTES: (FOR THIS SHEET)

FOR ACCURATE RIGHT OF WAY DATA, CONTACT RIGHT OF WAY ENGINEERING AT THE DISTRICT OFFICE.

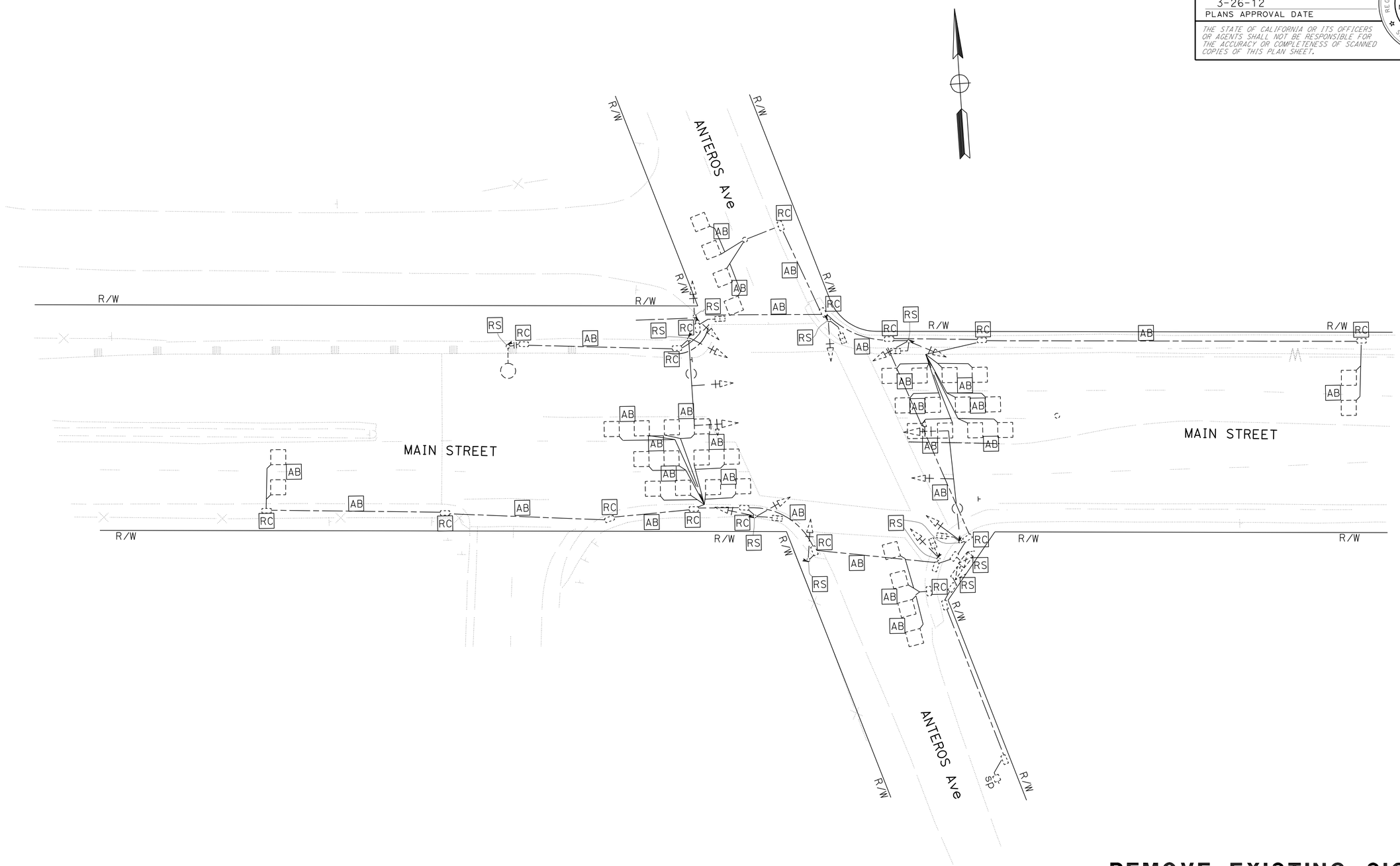

REMOVE EXISTING SIGNAL AND LIGHTING EQUIPMENT

SCALE: 1" = 20'

E-41

APPROVED FOR ELECTRICAL WORK ONLY

STATE OF CALIFORNIA - DEPARTMENT OF TRANSPORTATION
Caltrans 06-ELECTRICAL DESIGN

FUNCTIONAL SUPERVISOR: ALI BAKHDOUD
CALCULATED-DESIGNED BY: OMAR MENDOZA
CHECKED BY: HASHIM KHALID
REVISED BY
DATE REVISED

LAST REVISION 12-08-11
DATE PLOTTED => 28-MAR-2012
TIME PLOTTED => 13:32

Dist	COUNTY	ROUTE	POST MILES TOTAL PROJECT	SHEET No.	TOTAL SHEETS
10	SJ	4,99	R19.5/R20.1, 15.0/18.6	866	1414

REGISTERED ELECTRICAL ENGINEER 12-07-11 DATE

3-26-12
PLANS APPROVAL DATE

REGISTERED PROFESSIONAL ENGINEER HASHIM KHALID No. 18054 Exp. 6/30/13 ELECTRICAL STATE OF CALIFORNIA

THE STATE OF CALIFORNIA OR ITS OFFICERS OR AGENTS SHALL NOT BE RESPONSIBLE FOR THE ACCURACY OR COMPLETENESS OF SCANNED COPIES OF THIS PLAN SHEET.

NOTES:

1. FOR NOTES AND SCHEDULES, SEE SHEET E-43.
2. FOR ACCURATE RIGHT OF WAY DATA, CONTACT RIGHT OF WAY ENGINEERING AT THE DISTRICT OFFICE.

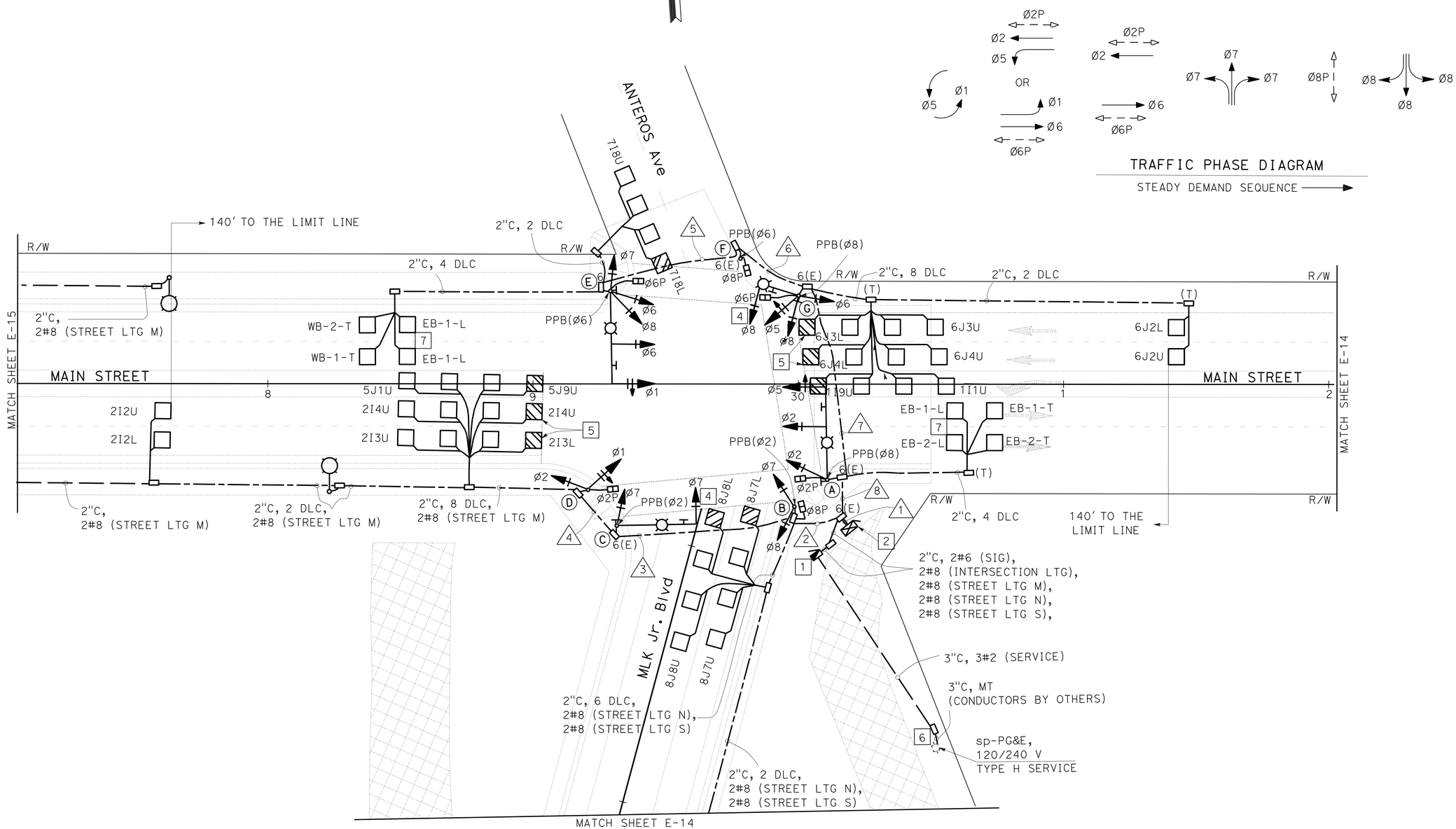

MODIFY SIGNAL AND LIGHTING (COUNTY STREET LOCATION 1)

SCALE: 1" = 20'

E-42

APPROVED FOR ELECTRICAL WORK ONLY

STATE OF CALIFORNIA - DEPARTMENT OF TRANSPORTATION
Caltrans® 06-ELECTRICAL DESIGN

FUNCTIONAL SUPERVISOR: ALI BAKHDOUD
CALCULATED-DESIGNED BY: HASHIM KHALID
CHECKED BY: OMAR MENDOZA
REVISED BY
DATE REVISED

LAST REVISION 12-08-11
DATE PLOTTED => 28-MAR-2012
TIME PLOTTED => 13:32

BORDER LAST REVISED 7/2/2010
USERNAME => s121614
DGN FILE => a3a100ua042.dgn
RELATIVE BORDER SCALE IS IN INCHES 0 1 2 3
UNIT 1515
PROJECT NUMBER & PHASE 10000004091

Dist	COUNTY	ROUTE	POST MILES TOTAL PROJECT	SHEET No.	TOTAL SHEETS
10	SJ	4,99	R19.5/R20.1, 15.0/18.6	867	1414

REGISTERED ELECTRICAL ENGINEER 12-07-11 DATE

3-26-12
PLANS APPROVAL DATE

REGISTERED PROFESSIONAL ENGINEER HASHIM KHALID No. 18054 Exp. 6/30/13 ELECTRICAL STATE OF CALIFORNIA

THE STATE OF CALIFORNIA OR ITS OFFICERS OR AGENTS SHALL NOT BE RESPONSIBLE FOR THE ACCURACY OR COMPLETENESS OF SCANNED COPIES OF THIS PLAN SHEET.

NOTES: (FOR SHEET E-42 AND E-43)

1. 120/240 V, 1Ø, 3-WIRE, TYPE III-AF SERVICE EQUIPMENT ENCLOSURE WITH THE FOLLOWING CIRCUIT BREAKERS:

COUNTY SERVICE No. 1029SJC00MAINST

AMPERES	VOLTS	POLES	NAMEPLATE	METER	PHOTOELECTRIC CONTROL TYPE
100	240	2	MAIN BREAKER	NO	—
50	120	1	TRAFFIC SIGNAL	NO	—
30	240	2	INTERSECTION LIGHTING	NO	V
30	240	2	STREET LIGHTING N	NO	V
30	240	2	STREET LIGHTING S	NO	V
30	240	2	STREET LIGHTING M	NO	V
15	120	1	LIGHTING CONTROL	NO	—
20	240	2	SPARE	NO	—
—	—	6	SPACE	—	—

2. STATE-FURNISHED MODEL 170 CONTROLLER ASSEMBLY AND BBS.
3. REFER TO SIGN PLANS FOR SIGN DETAILS.
4. INSTALL 4-SECTION SIGNAL HEAD ON SIGNAL MAST ARM AS PER DETAIL B ON THIS SHEET.
5. INDUCTIVE LOOP DETECTORS SHALL BE CONNECTED IN A PULL BOX AS SHOWN IN DETAIL A, WITH 10′ LOOP SPACING AND 1′ SET BACK FROM STOP BAR.
6. PULL BOX PER UTILITY REQUIREMENTS.
7. INDUCTIVE LOOP DETECTORS SHALL BE SPACED 20′ LEADING EDGE TO LEADING EDGE, COIL 6′ OF DLC IN CABINET.

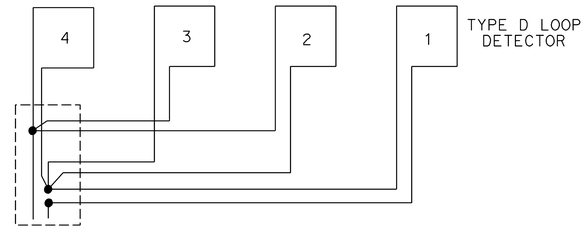

TYPICAL LOOP CONNECTIONS
(DASHED LINED REPRESENT THE PULL BOX)

DETAIL A

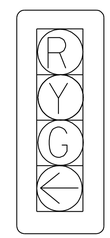

DETAIL B

CONDUCTOR AND CONDUIT SCHEDULE

CONDUCTOR DESIGNATION				CONDUIT RUN NUMBER AND SIZE							
CABLE TYPE	POLE	PHASE		1	2	3	4	5	6	7	8
				2-3"	3"	3"	3"	3"	3"	3"	3"
VEH-PED 12CSC	A	2,5,2P	8	1/1							1/1
	B	7,8,8P	2	1/1	1/1						
	C	7	2	1/1	1/1	1/1					
	D	1,2,2P		1	1	1	1				
	E	1,6,7,8,6P	6	2/1				2/1	2/1	2/1	2/1
PPB 3CSC	F	8P	6	1/1					1/1	1/1	1/1
	G	5,6,8,6P	8	1/1						1/1	1/1
		TOTAL		8/6	3/2	2/1	1	2/1	3/2	4/3	5/4

AWG	CIRCUIT	1	2	3	4	5	6	7	8
#6	SIGNAL	2							
#8	INTERSECTION LIGHTING		2	2		2	2	2	2
#8	STREET LIGHTING M		2	2	2				
#8	STREET LTG N		2						
#8	STREET LTG S		2						
DETECTORS-TYPE B DLC									
PHASE									
Ø1		2						2	2
Ø2		4	4	4	4				
Ø2 ADV		2	2	2	2				
Ø5		2	2	2	2				
Ø6		4						4	4
Ø6 ADV		2						2	2
Ø7		2				2	2	2	2
Ø8		4	4						
Ø8 ADV		2	2						
WB		4				4	4	4	4
EB		4							4
TOTAL		32	14	8	8	6	6	14	18

POLE AND EQUIPMENT SCHEDULE

	STANDARD			VEH SIG MTG		PED SIG MTG	PPB		HPS LUM	SPECIAL REQUIREMENTS
No.	TYPE	SMA	LMA	MAST ARM	POLE		Ø	ARROW		
A	24-4-100	35	12	MAS MAS	SV-1-T	SP-1-T	8	←	200 W	F=15, INSTALL R73-3(CA) AND D3-1 SIGN ON SMA. [3]
B	1-A				TV-2-T	SP-1-T	2	→		
C	19-4-100	30	15	MAS	SV-1-T		2	←	200 W	INSTALL D3-1 SIGN ON SMA. INSTALL R9-3a SIGN ON SIGNAL POLE. [3]
D	1-A				TV-2-T	SP-1-T				
E	24-4-100	35	12	MAS MAS	SV-3-T	SP-1-T	6	←	200 W	F=15, INSTALL R73-3(CA) AND D3-1 SIGN ON SMA. INSTALL R9-3a SIGN ON SIGNAL POLE. [3]
F	1-A					TP-1-T	6	←		
G	17-3-100	15	12	MAS	SV-3-T	SP-1-T	8	→	200 W	INSTALL R61-7(CA) AND D3-1 SIGN ON SIGNAL POLE.

APPROVED FOR ELECTRICAL WORK ONLY

MODIFY SIGNAL AND LIGHTING (COUNTY STREET LOCATION 1)

NO SCALE

E-43

STATE OF CALIFORNIA - DEPARTMENT OF TRANSPORTATION
Caltrans 06-ELECTRICAL DESIGN
FUNCTIONAL SUPERVISOR: ALI BAKHDOUD
CALCULATED-DESIGNED BY: HASHIM KHALID
CHECKED BY: OMAR MENDOZA
REVISED BY
DATE REVISED

LAST REVISION 12-08-11
DATE PLOTTED => 30-MAR-2012
TIME PLOTTED => 11:27

Dist	COUNTY	ROUTE	POST MILES TOTAL PROJECT	SHEET No.	TOTAL SHEETS
10	SJ	4,99	R19.5/R20.1, 15.0/18.6	868	1414

REGISTERED ELECTRICAL ENGINEER 12-07-11 DATE

3-26-12
PLANS APPROVAL DATE

REGISTERED PROFESSIONAL ENGINEER HASHIM KHALID No. 18054 Exp. 6/30/13 ELECTRICAL STATE OF CALIFORNIA

THE STATE OF CALIFORNIA OR ITS OFFICERS OR AGENTS SHALL NOT BE RESPONSIBLE FOR THE ACCURACY OR COMPLETENESS OF SCANNED COPIES OF THIS PLAN SHEET.

NOTES:

1. FOR NOTE AND SCHEDULES, SEE SHEET E-46.
2. FOR ACCURATE RIGHT OF WAY DATA, CONTACT RIGHT OF WAY ENGINEERING AT THE DISTRICT OFFICE.

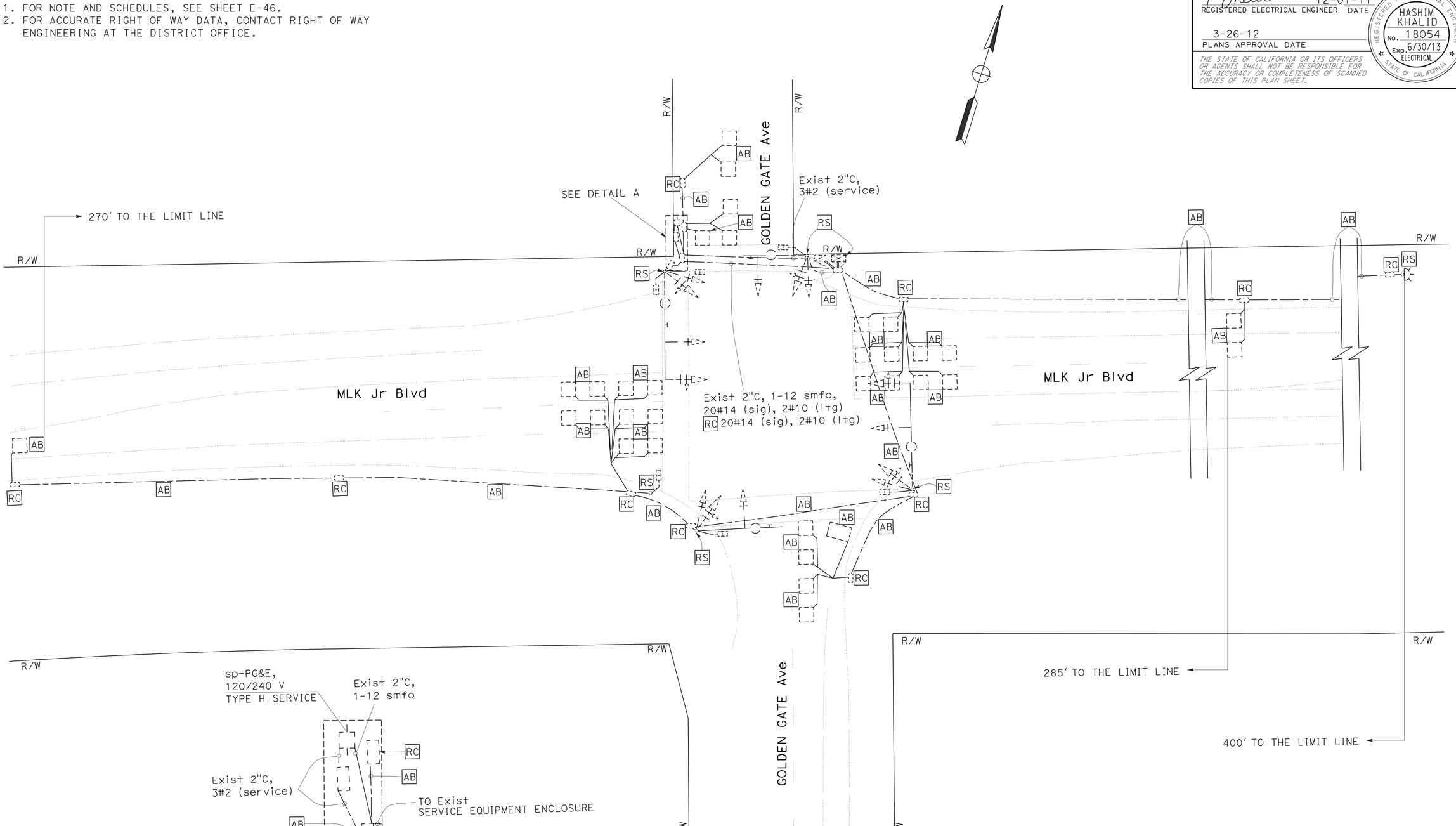

DETAIL A

NO SCALE

REMOVE EXISTING SIGNAL AND LIGHTING EQUIPMENT

SCALE: 1" = 20"

E-44

APPROVED FOR ELECTRICAL WORK ONLY

STATE OF CALIFORNIA - DEPARTMENT OF TRANSPORTATION
Caltrans 06-ELECTRICAL DESIGN

FUNCTIONAL SUPERVISOR: ALI BAKHDOUD
CALCULATED-DESIGNED BY: HASHIM KHALID
CHECKED BY: OMAR MENDOZA
REVISED BY
DATE REVISED

LAST REVISION 12-08-11
DATE PLOTTED => 29-MAR-2012
TIME PLOTTED => 15:30

Dist	COUNTY	ROUTE	POST MILES TOTAL PROJECT	SHEET No.	TOTAL SHEETS
10	SJ	4,99	R19.5/R20.1, 15.0/18.6	869	1414

REGISTERED ELECTRICAL ENGINEER 12-07-11 DATE

3-26-12
PLANS APPROVAL DATE

REGISTERED PROFESSIONAL ENGINEER HASHIM KHALID No. 18054 Exp. 6/30/13 ELECTRICAL STATE OF CALIFORNIA

THE STATE OF CALIFORNIA OR ITS OFFICERS OR AGENTS SHALL NOT BE RESPONSIBLE FOR THE ACCURACY OR COMPLETENESS OF SCANNED COPIES OF THIS PLAN SHEET.

NOTES:

1. FOR NOTES AND SCHEDULES, SEE SHEET E-46.
2. FOR ACCURATE RIGHT OF WAY DATA, CONTACT RIGHT OF WAY ENGINEERING AT THE DISTRICT OFFICE.

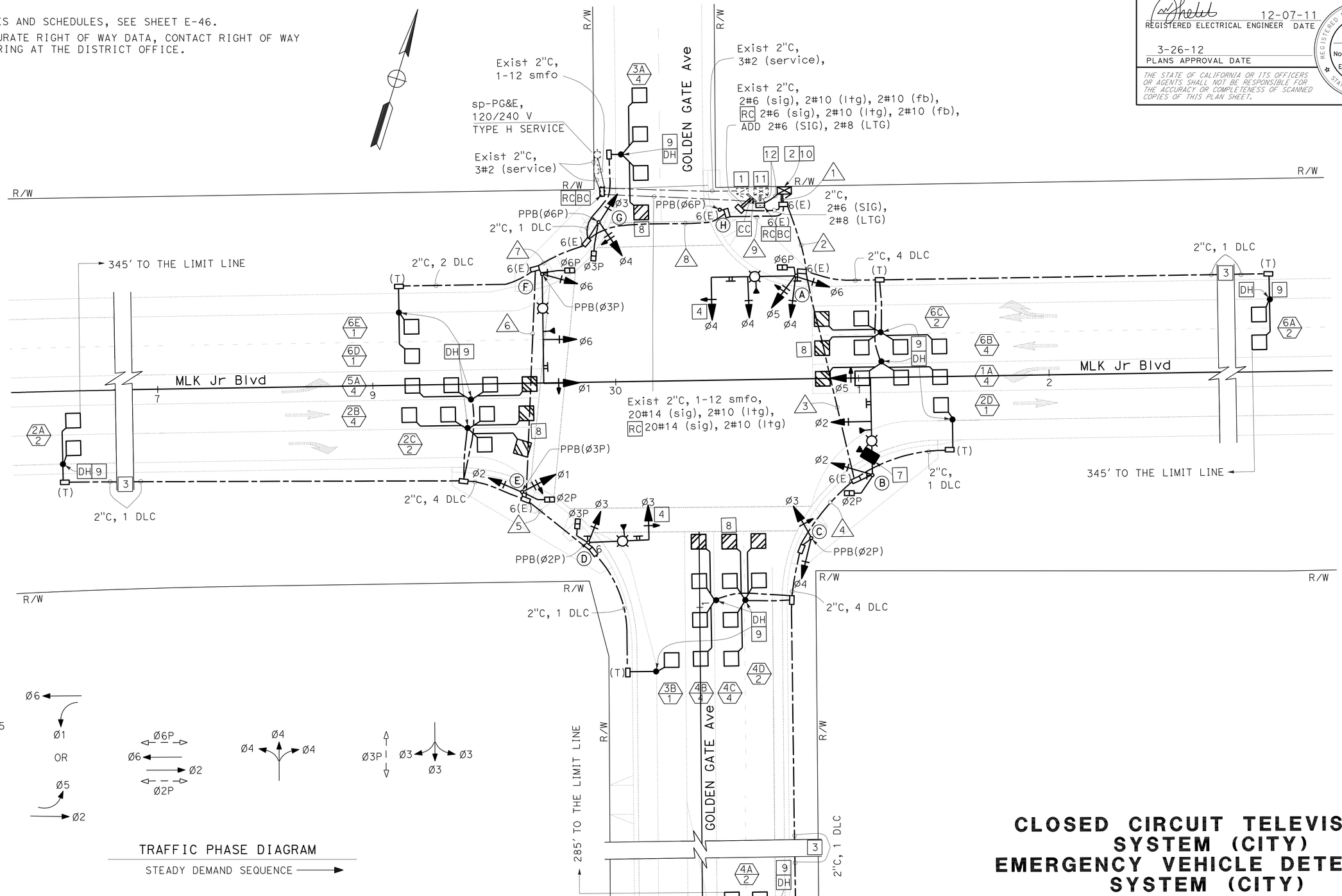

TRAFFIC PHASE DIAGRAM

STEADY DEMAND SEQUENCE

APPROVED FOR ELECTRICAL WORK ONLY

CLOSED CIRCUIT TELEVISION SYSTEM (CITY) EMERGENCY VEHICLE DETECTOR SYSTEM (CITY) MODIFY SIGNAL AND LIGHTING (CITY STREET LOCATION 4)

SCALE: 1" = 20'

E-45

STATE OF CALIFORNIA - DEPARTMENT OF TRANSPORTATION
Caltrans 06-ELECTRICAL DESIGN

FUNCTIONAL SUPERVISOR: ALI BAKHDOUD
CALCULATED-DESIGNED BY: HASHIM KHALID
CHECKED BY: OMAR MENDOZA
REVISED BY
DATE REVISED

LAST REVISION 12-08-11
DATE PLOTTED => 29-MAR-2012
TIME PLOTTED => 15:31

Dist	COUNTY	ROUTE	POST MILES TOTAL PROJECT	SHEET No.	TOTAL SHEETS
10	SJ	4,99	R19.5/R20.1, 15.0/18.6	870	1414

REGISTERED ELECTRICAL ENGINEER 12-07-11 DATE

3-26-12
PLANS APPROVAL DATE

REGISTERED PROFESSIONAL ENGINEER HASHIM KHALID No. 18054 Exp. 6/30/13 ELECTRICAL STATE OF CALIFORNIA

THE STATE OF CALIFORNIA OR ITS OFFICERS OR AGENTS SHALL NOT BE RESPONSIBLE FOR THE ACCURACY OR COMPLETENESS OF SCANNED COPIES OF THIS PLAN SHEET.

NOTES: (FOR SHEET E-45 AND E-46)

1 Exist 120/240 V, 1Ø, 3-WIRE, TYPE III-A SERVICE EQUIPMENT ENCLOSURE WITH THE FOLLOWING CIRCUIT BREAKERS:

CITY SERVICE

AMPERES	VOLTS	POLES	NAMEPLATE	METER	PHOTOELECTRIC CONTROL TYPE
100	240	3	MAIN BREAKER	YES/NO	——
40	120	1	SIGNAL	YES	——
30	240	2	INTERSECTION LIGHTING	NO	V
15	120	1	CONTROLS	NO	——
15	120	1	* FLASHING BEACON	YES	——

* REPLACE Exist NAMEPLATE WITH "BLANK"

2 STATE-FURNISHED MODEL 2070N CONTROLLER ASSEMBLY. INSTALL STATE-FURNISHED 4-CHANNEL MULTIMODE PHASE SELECTOR AND HARNESS. REFER TO DETAILS A AND B ON SHEET E-48.

3 INSTALL No. 5 PULL BOXES AS NECESSARY TO MAINTAIN 200' MAXIMUM SPACING.

4 INSTALL 4-SECTION SIGNAL HEAD ON SIGNAL MAST ARM PER DETAILS ON THIS SHEET.

5 REFER TO SIGN PLANS FOR SIGN DETAILS. INSTALL CITY STREET NAME SIGN PER DETAIL B ON SHEET E-61.

6 STATE-FURNISHED EVD PER DETAIL C ON SHEET E-48 AND POLE DETAIL SES-3.

7 STATE-FURNISHED CAMERA PER DETAIL A ON SHEET E-61 AND POLE DETAIL SES-3. INSTALLATION SHALL INCLUDE ALL MOUNTING HARDWARE, VIDEO, DATA, AND POWER CABLES, FIELD AND CENTRAL COMMUNICATION MODEMS (VIDEO/DATA) AND ASSOCIATED EQUIPMENT. CONTACT THE CITY OF STOCKTON TRAFFIC ENGINEERING (209-937-8411) PRIOR TO CAMERA INSTALLATION.

8 INSTALL INDUCTIVE LOOP DETECTORS PER DETAIL E1 AND E2 ON SHEET E-48.

9 INSTALL A CONCRETE CAP AROUND THE HANDHOLE PER DETAIL D ON SHEET E-48.

10 TERMINATE FIBER DROP IN LIU PER DETAIL G ON SHEET E-48.

11 RS Exist TRAFFIC SIGNAL CONTROLLER ASSEMBLY TO THE CITY OF STOCKTON.

12 RR Exist 1-12 smfo, REINSTALL THROUGH THE NEW 2½"C IN THE NEW SIGNAL CABINET. TERMINATE FIBER OPTIC CABLE IN CABINET WITH LIU WALL MOUNT BOX. IF THE FIBER OPTIC CABLE AND ITS AUXILARY EQUIPMENT ARE DAMAGED, THE CONTRACTOR SHALL BE RESPONSIBLE FOR ALL ASSOCIATED COSTS, AND SHALL COORDINATE THE REPAIR OR REPLACEMENT OF THE CABLE AND EQUIPMENT WITH AT&T.

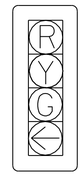

4-SECTION SIGNAL HEAD

SENSOR TABLE

CH	DET	LOOP DETECTORS
1	1	1A (4)
2		2A (2)
3		3A (4)
4		4A (2)
1	2	5A (4)
2		6A (2)
3		4B (4)
4		4C (4)
1	3	2B (4)
2		6B (4)
3		2C (DELAY) (2)
4		4D (DELAY) (2)
1	4	6C (DELAY) (2)
2		2D (SAMPLER) (1)
3		6D (SAMPLER) (1)
4		6E (SAMPLER) (1)
1	5	3B (SAMPLER) (1)

CONDUCTOR AND CONDUIT SCHEDULE

AWG	CIRCUIT	1	2	3	4	5	6	7	8	9
#14	Ø1 SIGNALS	6					3	6	6	6
	Ø2 SIGNALS	6	3	3			3	3	3	3
	Ø3 SIGNALS	9	3	3	3	3	3	3	6	6
	Ø4 SIGNALS	9	6	3	3				3	3
	Ø5 SIGNALS	6	6	3						
	Ø6 SIGNALS	6	3					3	3	3
	Ø2 PED	4	2	2			2	2	2	2
	Ø3 PED	4				2	2	2	4	4
	Ø6 PED	4	2					2	2	2
	Ø2 PPB	2	1	1	1	1	1	1	1	1
	Ø3 PPB	2					1	2	2	2
	Ø6 PPB	2							1	2
	PPB COMMON	2	1	1	1	1	1	1	1	1
	SPARES	6	3	3	3	3	3	3	3	3
	TOTAL	68	30	19	11	10	19	28	37	38
#10	SIGNAL COMMON	2	1	1	1	1	1	1	1	1
#8	INTERSECTION LTG		2	2		2	2	2	2	2
#6	CONTROLLER	2								
EVC		4	2	1		1	1	2	2	2
	CAMERA	1	1	1						
DLC	Ø1 DETECTORS	1	1							
	Ø2 DETECTORS	4	1	1			3	3	3	3
	Ø3 DETECTORS	2				1	1	1	2	2
	Ø4 DETECTORS	4	4	4	4					
	Ø5 DETECTORS	1					1	1	1	1
	Ø6 DETECTORS	5	3					2	2	2
TOTAL		17	9	5	4	1	5	7	8	8
CONDUIT SIZE (INCH)		2-4"	3"	3"	3"	3"	3"	3"	3"	3"

POLE AND EQUIPMENT SCHEDULE

No.	STANDARD TYPE	STANDARD SMA	STANDARD LMA	VEH SIG MTG MAST ARM	VEH SIG MTG POLE Ø	VEH SIG MTG POLE	PED SIG MTG	PPB Ø	PPB ARROW	HPS LUM	SPECIAL REQUIREMENTS
A	24-4-100	35	15	MAS MAS	4,5 6	SV-3-TD	SP-1-T	-	-	200 W	F=15, INSTALL EVD-B, R73-8(CA) AND D3-1 SIGN ON SMA. 5 6
B	26-4-100	40	12	MAS MAS	2	SV-1-T	SP-1-T	-	-	200 W	F=18, INSTALL EVD-A, R73-3(CA) AND D3-1 SIGN ON SMA. 5 6
C	1-B	-	-	-	4,3	TV-2-T	-	2	RIGHT	-	
D	19-4-100	25	12	MAS	3	SV-1-T	SP-1-T	2	LEFT	200 W	INSTALL EVD-D, R3-4 AND D3-1 SIGN ON SMA. 5 6
E	1-B	-	-	-	1,2	TV-2-T	SP-1-T	3	RIGHT	-	
F	26-4-100	45	12	MAT MAS	6	SV-1-T	SP-1-T	3	LEFT	200 W	F=18, INSTALL EVD-C, R73-3(CA) AND D3-1 SIGN ON SMA. 5 6
G	1-B	-	-	-	4,3	TV-2-T	SP-1-T	6	RIGHT	-	
H	PPB POLE	-	-	-	-	-	-	6	LEFT	-	

APPROVED FOR ELECTRICAL WORK ONLY

CLOSED CIRCUIT TELEVISION SYSTEM (CITY)
EMERGENCY VEHICLE DETECTOR SYSTEM (CITY)
MODIFY SIGNAL AND LIGHTING (CITY STREET LOCATION 4)

NO SCALE

E-46

STATE OF CALIFORNIA - DEPARTMENT OF TRANSPORTATION
Caltrans 06-ELECTRICAL DESIGN

FUNCTIONAL SUPERVISOR: ALI BAKHDOUD
CALCULATED-DESIGNED BY: HASHIM KHALID
CHECKED BY: OMAR MENDOZA
REVISED BY
DATE REVISED

LAST REVISION 12-08-11
DATE PLOTTED => 30-MAR-2012
TIME PLOTTED => 11:27

Dist	COUNTY	ROUTE	POST MILES TOTAL PROJECT	SHEET No.	TOTAL SHEETS
10	SJ	4,99	R19.5/R20.1, 15.0/18.6	871	1414

REGISTERED ELECTRICAL ENGINEER 12-07-11 DATE

3-26-12
PLANS APPROVAL DATE

REGISTERED PROFESSIONAL ENGINEER HASHIM KHALID No. 18054 Exp. 6/30/13 ELECTRICAL STATE OF CALIFORNIA

THE STATE OF CALIFORNIA OR ITS OFFICERS OR AGENTS SHALL NOT BE RESPONSIBLE FOR THE ACCURACY OR COMPLETENESS OF SCANNED COPIES OF THIS PLAN SHEET.

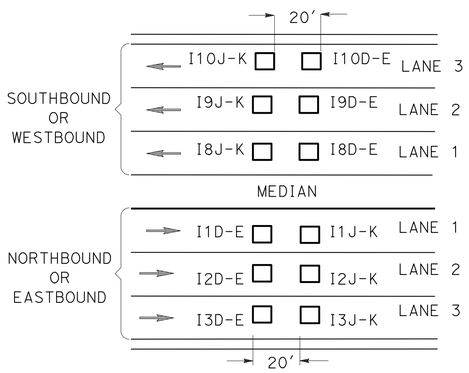

DLC TERMINATION (TB2)

I - INPUT PANEL (TB2)
DETECTOR ASSIGNMENT
1 - NORTHBOUND/EASTBOUND LANE 1
2 - NORTHBOUND/EASTBOUND LANE 2
3 - NORTHBOUND/EASTBOUND LANE 3
4 - NORTHBOUND/EASTBOUND LANE 4
5 - NORTHBOUND/EASTBOUND LANE 5
6 - NORTHBOUND/EASTBOUND LANE 6
7 - NORTHBOUND/EASTBOUND LANE 7
8 - SOUTHBOUND/WESTBOUND LANE 1
9 - SOUTHBOUND/WESTBOUND LANE 2
10 - SOUTHBOUND/WESTBOUND LANE 3
11 - SOUTHBOUND/WESTBOUND LANE 4
12 - SOUTHBOUND/WESTBOUND LANE 5
13 - SOUTHBOUND/WESTBOUND LANE 6
14 - SOUTHBOUND/WESTBOUND LANE 7
I1D-E
D-E - ENTERING
J-K - LEAVING

DLC IDENTIFICATION

D-L-N
DIRECTION OF TRAFFIC
N - NORTHBOUND
S - SOUTHBOUND
E - EASTBOUND
W - WESTBOUND
1 - ENTERING
2 - LEAVING
LANE NUMBER

TMS DLC IDENTIFICATION AND TERMINATION
DETAIL A

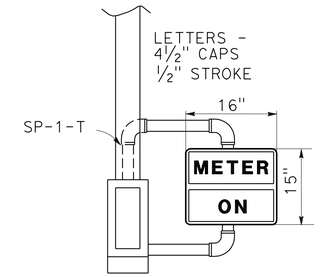

DETAIL F

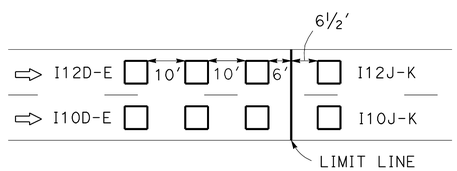

DETAIL B

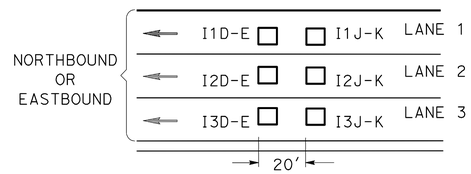

DETAIL C

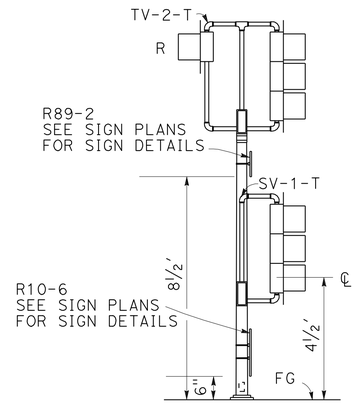

TYPE I-D STANDARD INSTALLATION
DETAIL D

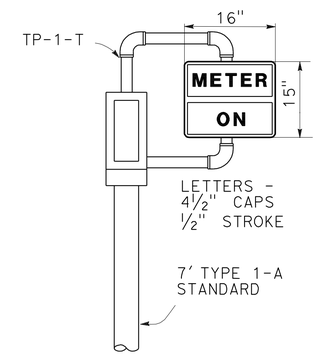

DETAIL E

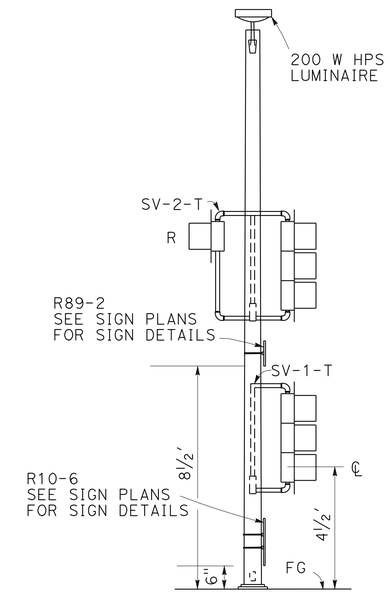

DETAIL G

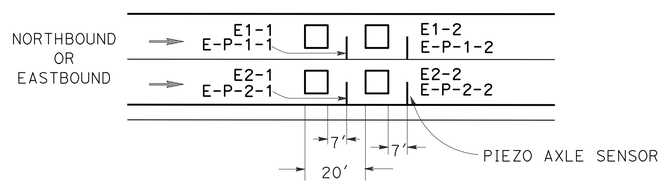

PIEZO AXLE SENSOR IDENTIFICATION

D-P-L-N
DIRECTION OF TRAFFIC
N - NORTHBOUND
S - SOUTHBOUND
E - EASTBOUND
W - WESTBOUND
1 - ENTERING
2 - LEAVING
LANE NUMBER
P - PIEZO AXLE SENSOR

DLC IDENTIFICATION

D-L-N
DIRECTION OF TRAFFIC
N - NORTHBOUND
S - SOUTHBOUND
E - EASTBOUND
W - WESTBOUND
1 - ENTERING
2 - LEAVING
LANE NUMBER

VCS DLC AND PIEZO AXLE SENSOR IDENTIFICATION
DETAIL H

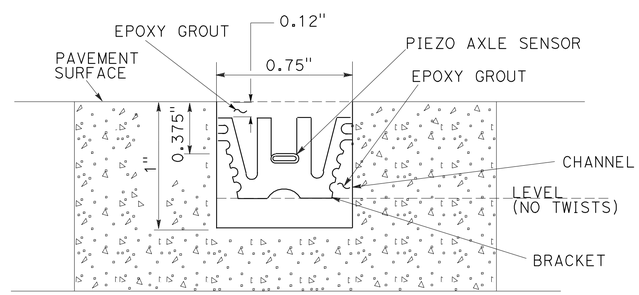

SECTION A-A

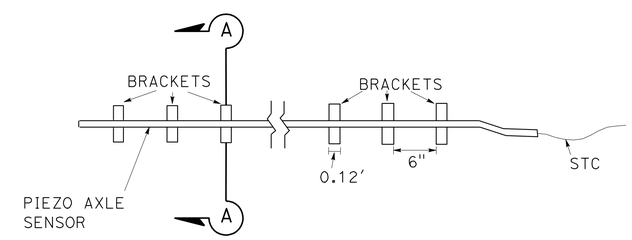

PIEZO AXLE SENSOR INSTALLATION
DETAIL I

VEHICLE CLASSIFICATION STATION
TRAFFIC MONITORING STATION
RAMP METERING SYSTEM
(ELECTRICAL DETAILS)

NO SCALE

E-47

APPROVED FOR ELECTRICAL WORK ONLY

STATE OF CALIFORNIA - DEPARTMENT OF TRANSPORTATION
Caltrans 06-ELECTRICAL DESIGN

FUNCTIONAL SUPERVISOR: ALI BAKHDOUD
CALCULATED-DESIGNED BY: HASHIM KHALID
CHECKED BY: OMAR MENDOZA
REVISED BY
DATE REVISED

LAST REVISION 12-08-11
DATE PLOTTED => 29-MAR-2012
TIME PLOTTED => 15:31

Dist	COUNTY	ROUTE	POST MILES TOTAL PROJECT	SHEET No.	TOTAL SHEETS
10	SJ	4,99	R19.5/R20.1, 15.0/18.6	872	1414

REGISTERED ELECTRICAL ENGINEER 12-07-11 DATE

3-26-12
PLANS APPROVAL DATE

REGISTERED PROFESSIONAL ENGINEER HASHIM KHALID No. 18054 Exp. 6/30/13 ELECTRICAL STATE OF CALIFORNIA

THE STATE OF CALIFORNIA OR ITS OFFICERS OR AGENTS SHALL NOT BE RESPONSIBLE FOR THE ACCURACY OR COMPLETENESS OF SCANNED COPIES OF THIS PLAN SHEET.

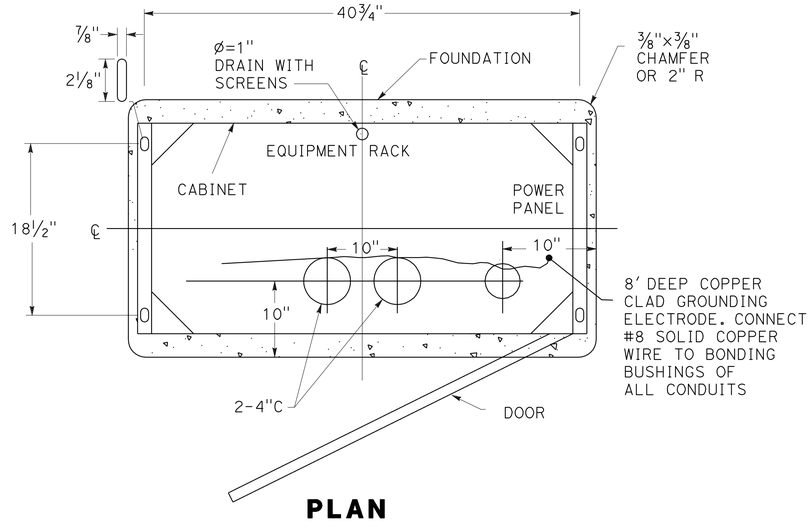

PLAN
CONTROLLER CABINET AND SERVICE EQUIPMENT ENCLOSURE
DETAIL A

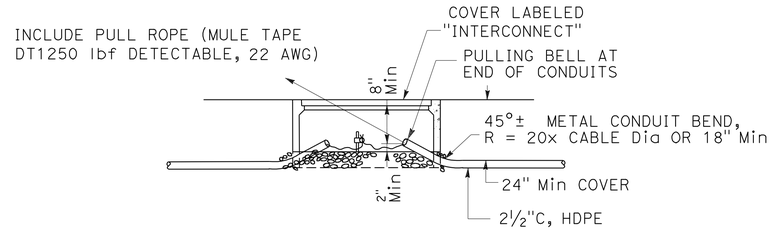

FRONT-VIEW
No. 6(E) INTERCONNECT PULL BOX
DETAIL F

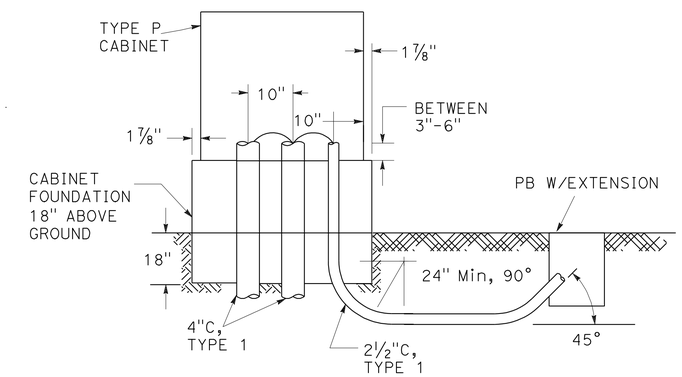

FRONT-VIEW
DETAIL A

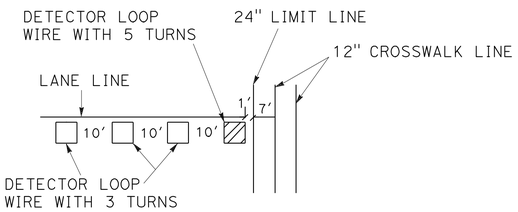

NOTE:
5'x5' LOOPS FOR 11' LANES AND NARROWER.
6'x6' LOOPS FOR LANES WIDER THAN 11'.
ALL SAMPLER AND ADVANCE LOOPS SHALL BE 6'x6'.

DETECTOR PLACEMENT
DETAIL E1

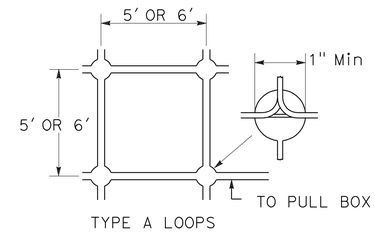

DETECTOR INSTALLATION DRILLED CORNERS
DETAIL E2

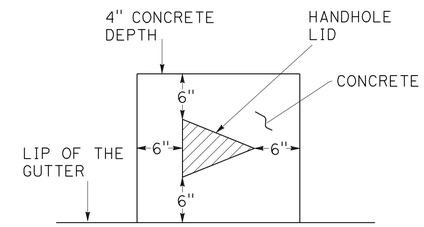

PLAN
DETECTOR HANDHOLE AT GUTTER LIP
DETAIL D

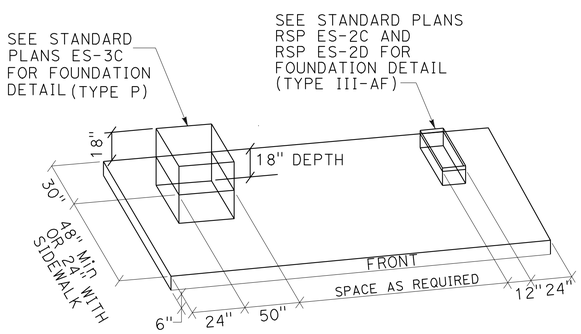

CONTROLLER AND SERVICE EQUIPMENT ENCLOSURE WALKWAY
DETAIL B

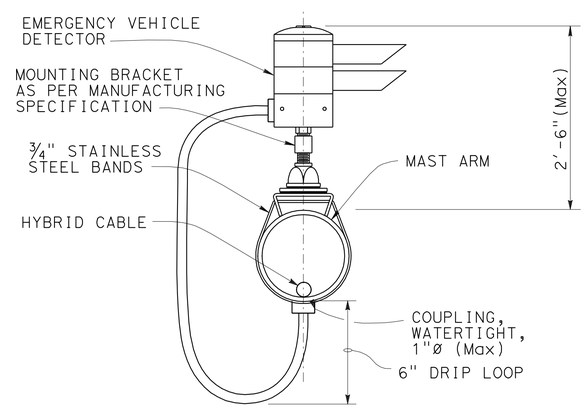

SIDE VIEW
EVD DETECTOR MAST ARM MOUNTING
DETAIL C

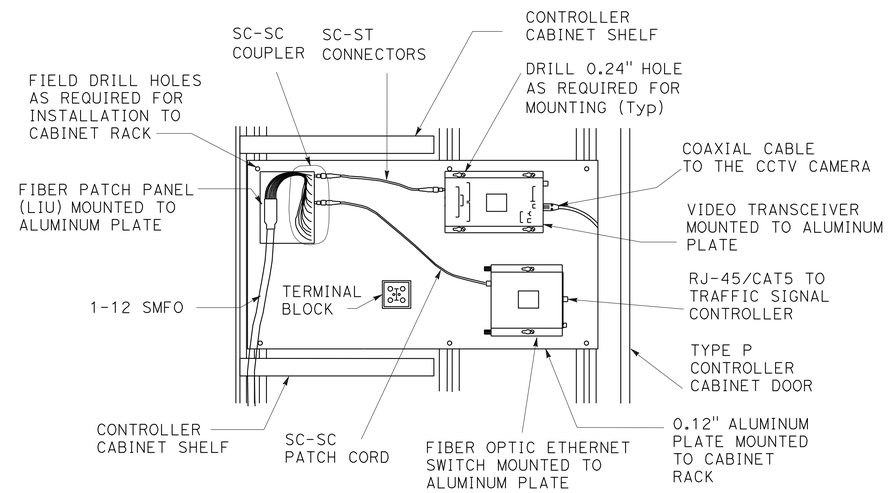

VIDEO/ETHERNET/MODEM MOUNTING PLATE FOR INSTALLATION IN P CABINET
DETAIL G

APPROVED FOR ELECTRICAL WORK ONLY

SIGNAL AND LIGHTING (CITY STREET)
(CITY ELECTRICAL DETAILS)

NO SCALE

E-48

REVISED BY	DATE REVISED	HASHIM KHALID	OMAR MENDOZA	CALCULATED-DESIGNED BY	CHECKED BY	FUNCTIONAL SUPERVISOR	ALI BAKHDOUD

STATE OF CALIFORNIA - DEPARTMENT OF TRANSPORTATION
Caltrans 06-ELECTRICAL DESIGN

LAST REVISION 12-08-11 | DATE PLOTTED => 30-MAR-2012 | TIME PLOTTED => 11:27

Dist	COUNTY	ROUTE	POST MILES TOTAL PROJECT	SHEET No.	TOTAL SHEETS
10	SJ	4,99	R19.5/R20.1, 15.0/18.6	873	1414

REGISTERED ELECTRICAL ENGINEER 12-07-11 DATE

3-26-12
PLANS APPROVAL DATE

REGISTERED PROFESSIONAL ENGINEER HASHIM KHALID No. 18054 Exp. 6/30/13 ELECTRICAL STATE OF CALIFORNIA

THE STATE OF CALIFORNIA OR ITS OFFICERS OR AGENTS SHALL NOT BE RESPONSIBLE FOR THE ACCURACY OR COMPLETENESS OF SCANNED COPIES OF THIS PLAN SHEET.

LEGEND:

- —— EXISTING ELEMENT
- ● SPLICE FIBER TO FIBER
- × CUT END OF FIBER
- ▫ SC CONNECTOR ON NEW FDU OR ITU

ABBREVIATIONS:

FDU	FIBER DISTRIBUTION UNIT
FO	FIBER OPTIC
FOM	FIBER OPTIC MODEM (SF)
ITU	INTERCONNECT TERMINATION UNIT
(SF)	STATE FURNISHED
SMFO	SINGLE MODE FIBER OPTIC CABLE
SV	SPLICE VAULT
TCVR	VIDEO TRANSCEIVER (SF)
MUX	MULTIPLEXER (SF)
TX	TRANSMIT
RX	RECEIVE

BL	BLUE
OR	ORANGE
GR	GREEN
BR	BROWN
SL	SLATE
WT	WHITE
RD	RED
BK	BLACK
YL	YELLOW
VL	VIOLET
RS	ROSE
AQ	AQUA

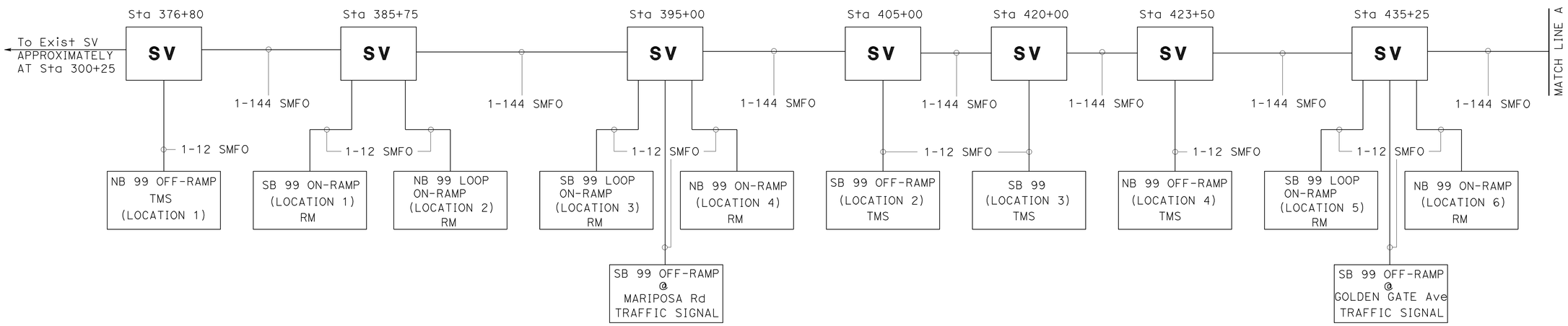

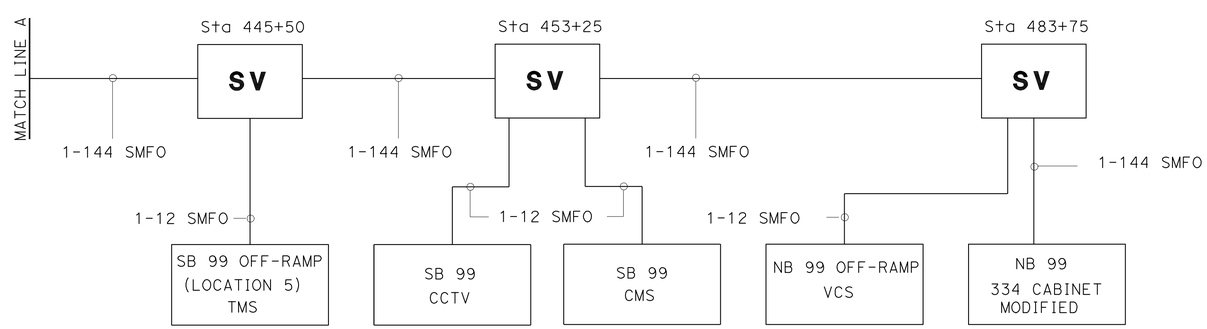

FIBER OPTIC SYSTEM

NO SCALE

E-49

APPROVED FOR ELECTRICAL WORK ONLY

STATE OF CALIFORNIA - DEPARTMENT OF TRANSPORTATION
Caltrans 06-ELECTRICAL DESIGN

FUNCTIONAL SUPERVISOR: ALI BAKHDOUD
CALCULATED-DESIGNED BY: OMAR MENDOZA
CHECKED BY: HASHIM KHALID
REVISED BY
DATE REVISED

LAST REVISION 12-08-11
DATE PLOTTED => 30-MAR-2012
TIME PLOTTED => 11:28

Dist	COUNTY	ROUTE	POST MILES TOTAL PROJECT	SHEET No.	TOTAL SHEETS
10	SJ	4,99	R19.5/R20.1, 15.0/18.6	874	1414

REGISTERED ELECTRICAL ENGINEER 12-07-11 DATE

3-26-12
PLANS APPROVAL DATE

REGISTERED PROFESSIONAL ENGINEER
HASHIM KHALID
No. 18054
Exp. 6/30/13
ELECTRICAL
STATE OF CALIFORNIA

THE STATE OF CALIFORNIA OR ITS OFFICERS OR AGENTS SHALL NOT BE RESPONSIBLE FOR THE ACCURACY OR COMPLETENESS OF SCANNED COPIES OF THIS PLAN SHEET.

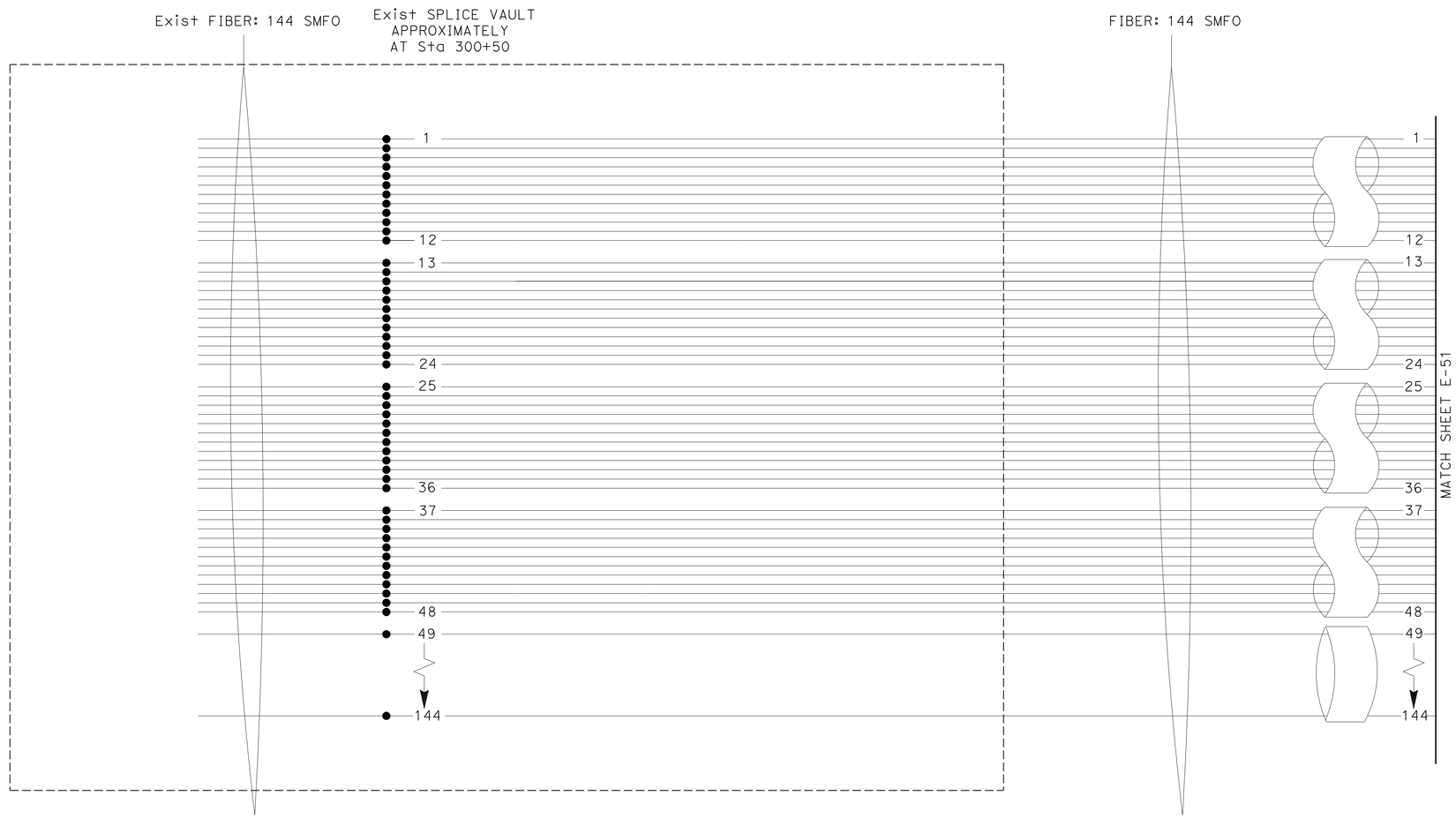

FIBER OPTIC SYSTEM
(FIBER OPTIC BLOCK BREAKOUT)

NO SCALE

E-50

APPROVED FOR ELECTRICAL WORK ONLY

REVISED BY | DATE REVISED
HASHIM KHALID | OMAR MENDOZA
CALCULATED-DESIGNED BY | CHECKED BY
FUNCTIONAL SUPERVISOR: ALI BAKHDOUD

STATE OF CALIFORNIA - DEPARTMENT OF TRANSPORTATION
Caltrans® 06-ELECTRICAL DESIGN

LAST REVISION 12-08-11 | DATE PLOTTED => 28-MAR-2012 | TIME PLOTTED => 13:33

Dist	COUNTY	ROUTE	POST MILES TOTAL PROJECT	SHEET No.	TOTAL SHEETS
10	SJ	4,99	R19.5/R20.1, 15.0/18.6	875	1414

REGISTERED ELECTRICAL ENGINEER 12-07-11 DATE

3-26-12
PLANS APPROVAL DATE

REGISTERED PROFESSIONAL ENGINEER HASHIM KHALID No. 18054 Exp. 6/30/13 ELECTRICAL STATE OF CALIFORNIA

THE STATE OF CALIFORNIA OR ITS OFFICERS OR AGENTS SHALL NOT BE RESPONSIBLE FOR THE ACCURACY OR COMPLETENESS OF SCANNED COPIES OF THIS PLAN SHEET.

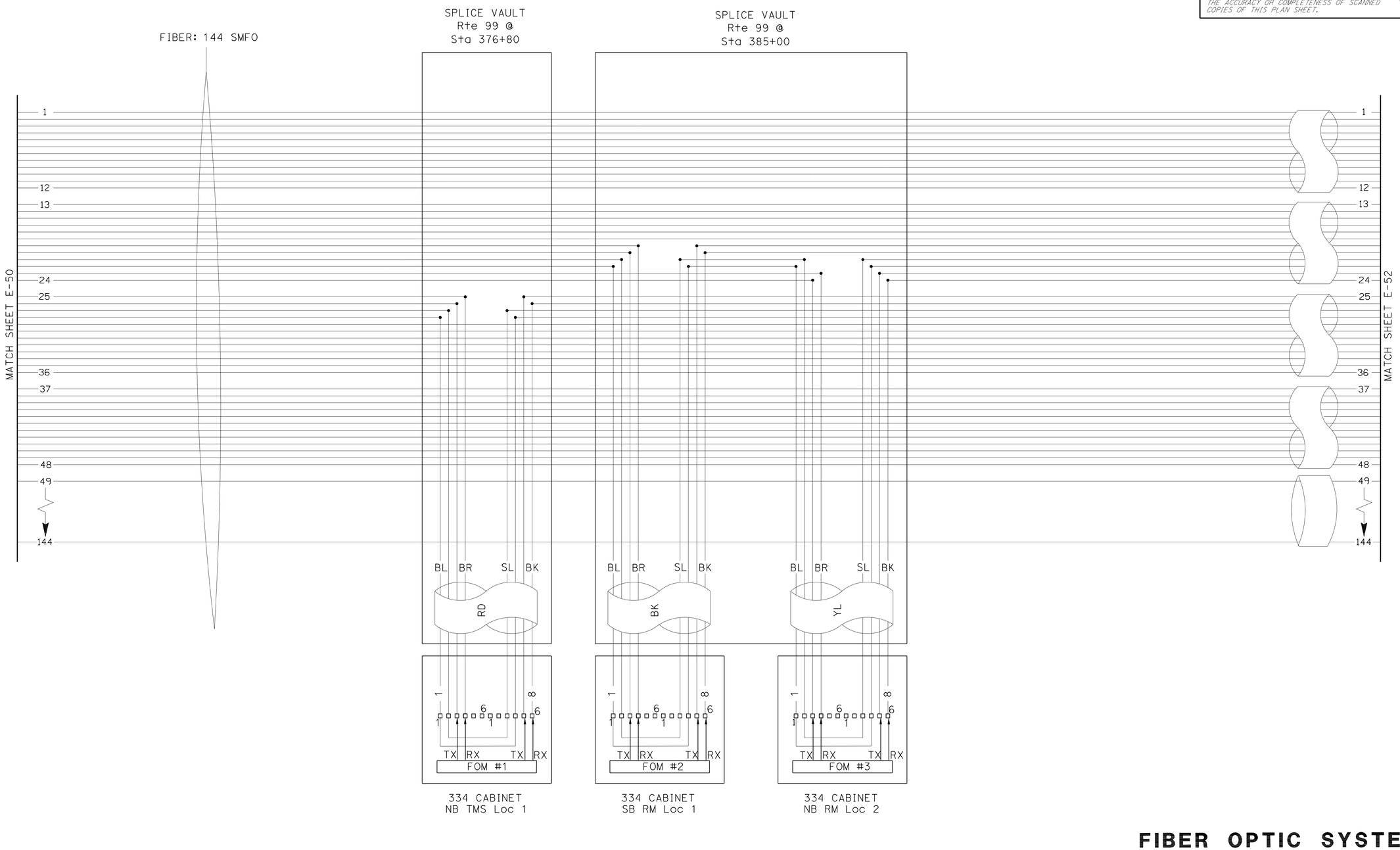

FIBER OPTIC SYSTEM
(FIBER OPTIC BLOCK BREAKOUT)

NO SCALE

E-51

APPROVED FOR ELECTRICAL WORK ONLY

STATE OF CALIFORNIA - DEPARTMENT OF TRANSPORTATION
Caltrans 06-ELECTRICAL DESIGN

FUNCTIONAL SUPERVISOR: ALI BAKHDOUD
CALCULATED-DESIGNED BY: HASHIM KHALID
CHECKED BY: OMAR MENDOZA
REVISED BY
DATE REVISED

LAST REVISION 12-08-11 | DATE PLOTTED => 30-MAR-2012 | TIME PLOTTED => 11:28

Dist	COUNTY	ROUTE	POST MILES TOTAL PROJECT	SHEET No.	TOTAL SHEETS
10	SJ	4,99	R19.5/R20.1, 15.0/18.6	876	1414

REGISTERED ELECTRICAL ENGINEER 12-07-11 DATE

3-26-12
PLANS APPROVAL DATE

REGISTERED PROFESSIONAL ENGINEER HASHIM KHALID No. 18054 Exp. 6/30/13 ELECTRICAL STATE OF CALIFORNIA

THE STATE OF CALIFORNIA OR ITS OFFICERS OR AGENTS SHALL NOT BE RESPONSIBLE FOR THE ACCURACY OR COMPLETENESS OF SCANNED COPIES OF THIS PLAN SHEET.

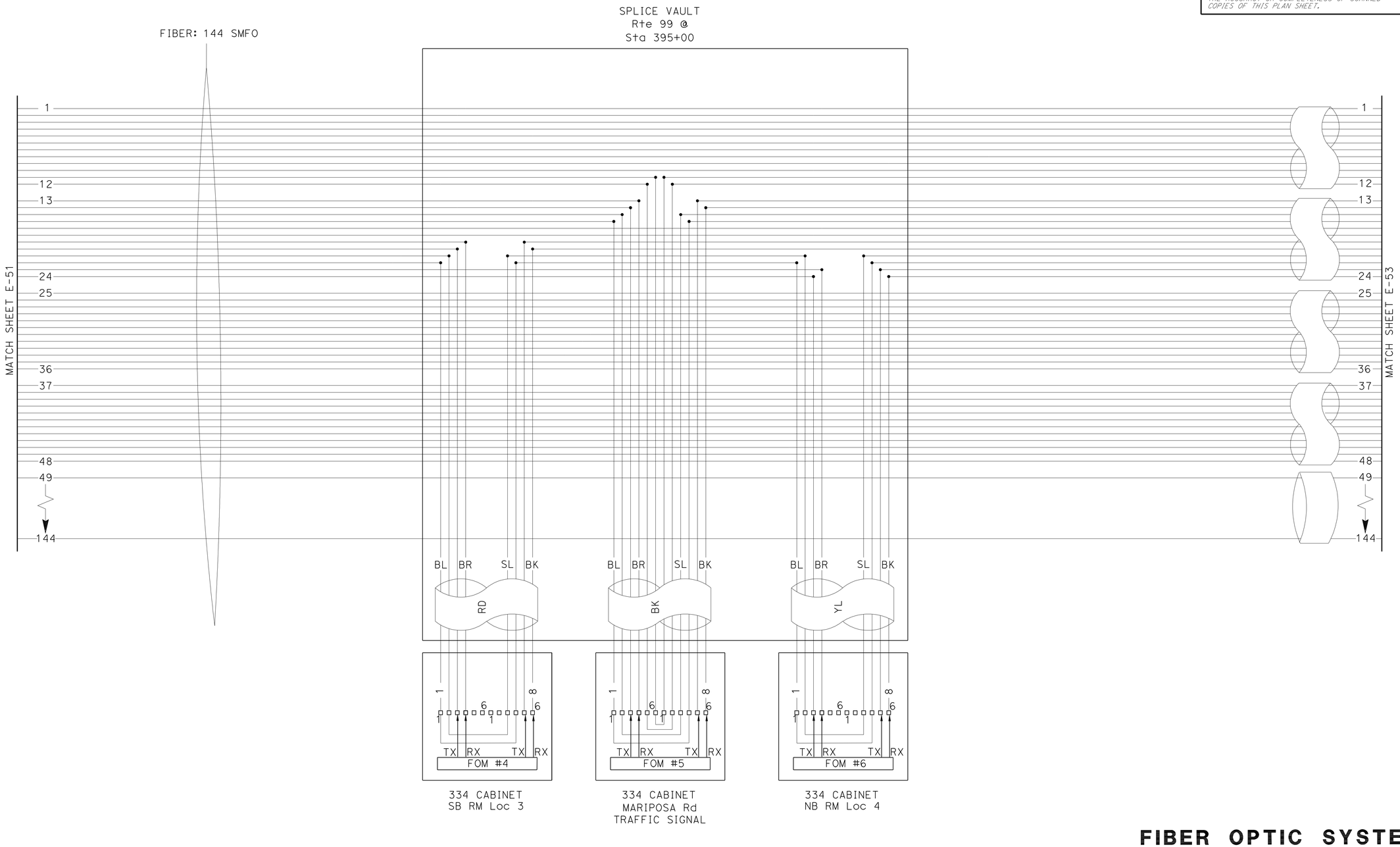

FIBER OPTIC SYSTEM
(FIBER OPTIC BLOCK BREAKOUT)

NO SCALE

E-52

APPROVED FOR ELECTRICAL WORK ONLY

REVISED BY	DATE REVISED
HASHIM KHALID	OMAR MENDOZA
CALCULATED-DESIGNED BY	CHECKED BY
FUNCTIONAL SUPERVISOR	ALI BAKHDOUD

STATE OF CALIFORNIA - DEPARTMENT OF TRANSPORTATION
Caltrans 06-ELECTRICAL DESIGN

LAST REVISION 12-08-11 | DATE PLOTTED => 30-MAR-2012 | TIME PLOTTED => 11:28

Dist	COUNTY	ROUTE	POST MILES TOTAL PROJECT	SHEET No.	TOTAL SHEETS
10	SJ	4,99	R19.5/R20.1, 15.0/18.6	877	1414

REGISTERED ELECTRICAL ENGINEER 12-07-11 DATE

3-26-12
PLANS APPROVAL DATE

REGISTERED PROFESSIONAL ENGINEER HASHIM KHALID No. 18054 Exp. 6/30/13 ELECTRICAL STATE OF CALIFORNIA

THE STATE OF CALIFORNIA OR ITS OFFICERS OR AGENTS SHALL NOT BE RESPONSIBLE FOR THE ACCURACY OR COMPLETENESS OF SCANNED COPIES OF THIS PLAN SHEET.

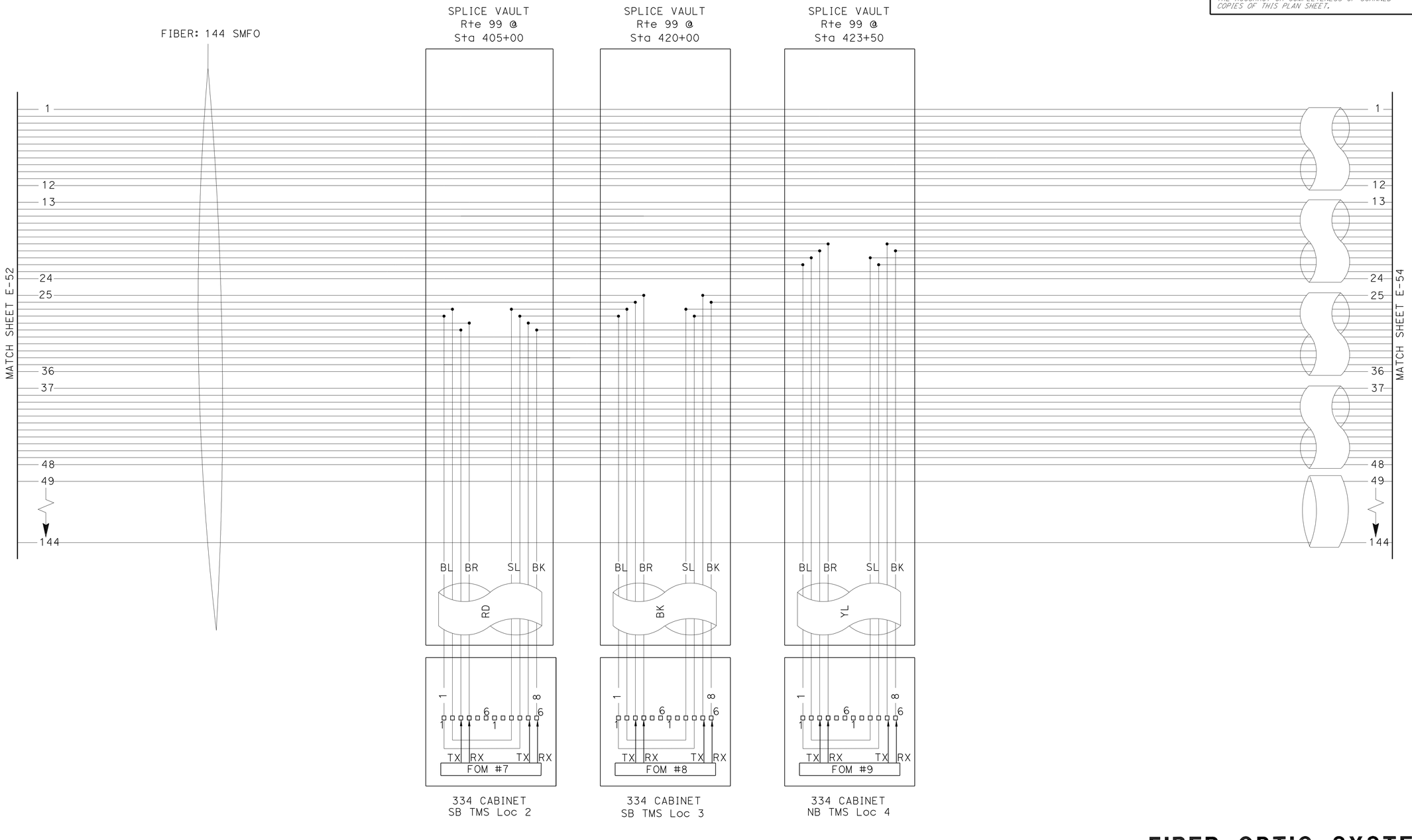

FIBER OPTIC SYSTEM
(FIBER OPTIC BLOCK BREAKOUT)

NO SCALE

E-53

APPROVED FOR ELECTRICAL WORK ONLY

STATE OF CALIFORNIA - DEPARTMENT OF TRANSPORTATION
Caltrans 06-ELECTRICAL DESIGN

FUNCTIONAL SUPERVISOR: ALI BAKHDOUD
CALCULATED-DESIGNED BY: HASHIM KHALID
CHECKED BY: OMAR MENDOZA
REVISED BY
DATE REVISED

LAST REVISION 12-08-11 | DATE PLOTTED => 28-MAR-2012 | TIME PLOTTED => 13:33

Dist	COUNTY	ROUTE	POST MILES TOTAL PROJECT	SHEET No.	TOTAL SHEETS
10	SJ	4,99	R19.5/R20.1, 15.0/18.6	878	1414

REGISTERED ELECTRICAL ENGINEER 12-07-11 DATE

3-26-12
PLANS APPROVAL DATE

REGISTERED PROFESSIONAL ENGINEER
HASHIM KHALID
No. 18054
Exp. 6/30/13
ELECTRICAL
STATE OF CALIFORNIA

THE STATE OF CALIFORNIA OR ITS OFFICERS OR AGENTS SHALL NOT BE RESPONSIBLE FOR THE ACCURACY OR COMPLETENESS OF SCANNED COPIES OF THIS PLAN SHEET.

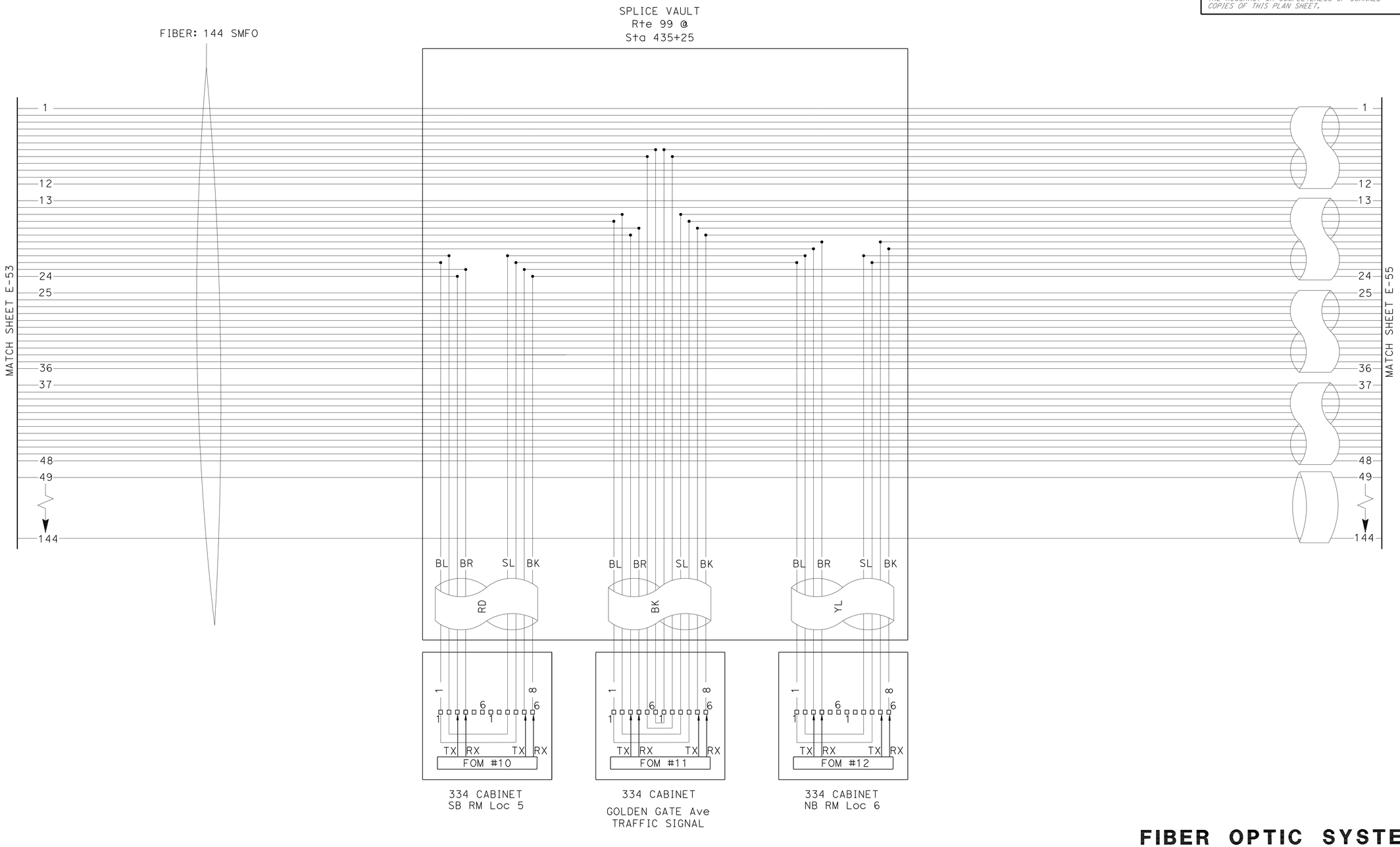

FIBER OPTIC SYSTEM
(FIBER OPTIC BLOCK BREAKOUT)

NO SCALE

E-54

APPROVED FOR ELECTRICAL WORK ONLY

STATE OF CALIFORNIA - DEPARTMENT OF TRANSPORTATION
Caltrans 06-ELECTRICAL DESIGN

FUNCTIONAL SUPERVISOR: ALI BAKHDOUD
CALCULATED-DESIGNED BY: HASHIM KHALID
CHECKED BY: OMAR MENDOZA
REVISED BY
DATE REVISED

LAST REVISION 12-08-11 | DATE PLOTTED => 28-MAR-2012 | TIME PLOTTED => 13:33

Dist	COUNTY	ROUTE	POST MILES TOTAL PROJECT	SHEET No.	TOTAL SHEETS
10	SJ	4,99	R19.5/R20.1, 15.0/18.6	879	1414

REGISTERED ELECTRICAL ENGINEER 12-07-11 DATE

3-26-12
PLANS APPROVAL DATE

REGISTERED PROFESSIONAL ENGINEER HASHIM KHALID No. 18054 Exp. 6/30/13 ELECTRICAL STATE OF CALIFORNIA

THE STATE OF CALIFORNIA OR ITS OFFICERS OR AGENTS SHALL NOT BE RESPONSIBLE FOR THE ACCURACY OR COMPLETENESS OF SCANNED COPIES OF THIS PLAN SHEET.

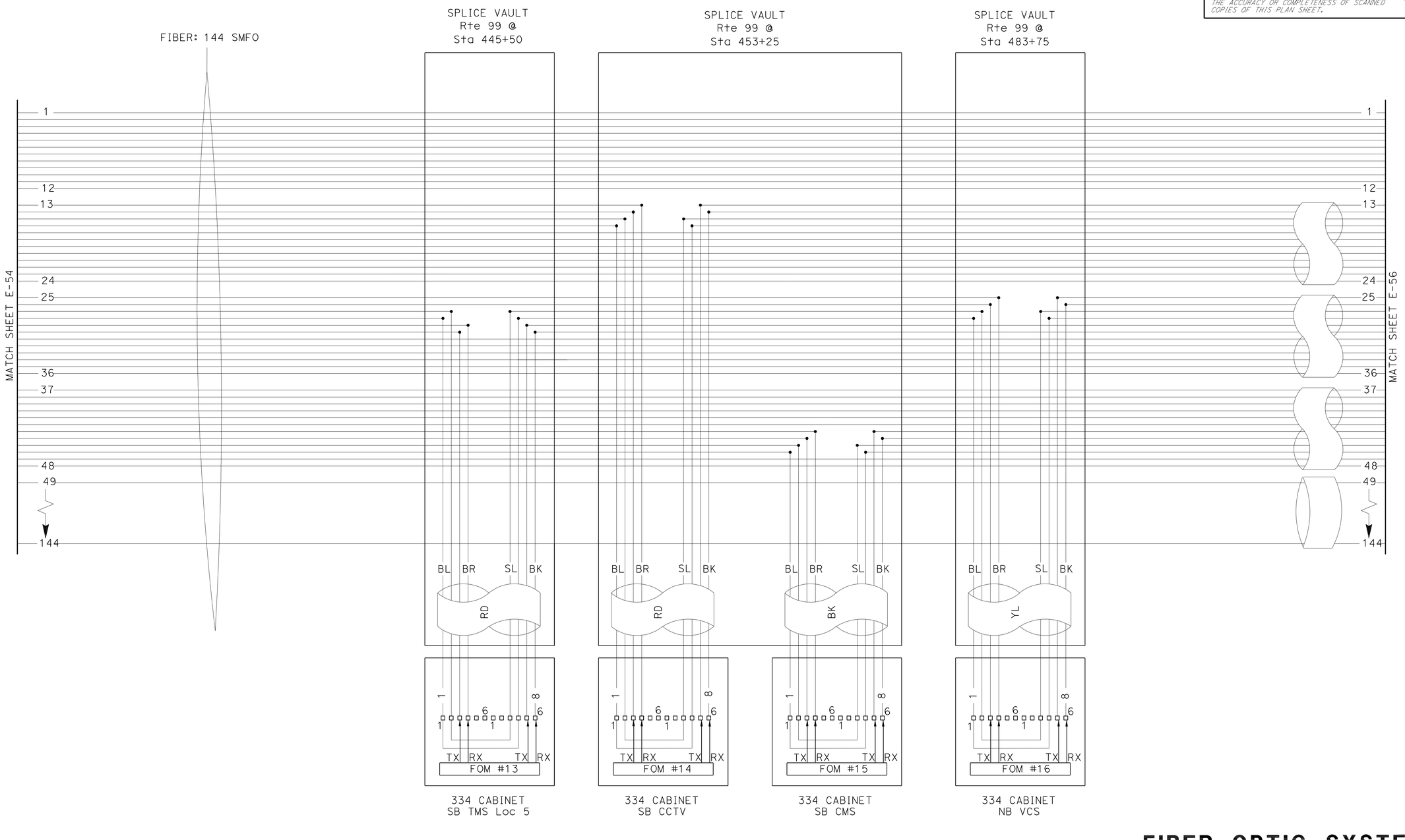

FIBER OPTIC SYSTEM
(FIBER OPTIC BLOCK BREAKOUT)
NO SCALE

E-55

APPROVED FOR ELECTRICAL WORK ONLY

STATE OF CALIFORNIA - DEPARTMENT OF TRANSPORTATION
Caltrans 06-ELECTRICAL DESIGN

FUNCTIONAL SUPERVISOR: ALI BAKHDOUD
CALCULATED-DESIGNED BY: HASHIM KHALID
CHECKED BY: OMAR MENDOZA
REVISED BY
DATE REVISED

LAST REVISION 12-08-11 | DATE PLOTTED => 28-MAR-2012 | TIME PLOTTED => 13:33

Dist	COUNTY	ROUTE	POST MILES TOTAL PROJECT	SHEET No.	TOTAL SHEETS
10	SJ	4,99	R19.5/R20.1, 15.0/18.6	880	1414

REGISTERED ELECTRICAL ENGINEER 12-07-11 DATE

3-26-12
PLANS APPROVAL DATE

REGISTERED PROFESSIONAL ENGINEER
HASHIM KHALID
No. 18054
Exp. 6/30/13
ELECTRICAL
STATE OF CALIFORNIA

THE STATE OF CALIFORNIA OR ITS OFFICERS OR AGENTS SHALL NOT BE RESPONSIBLE FOR THE ACCURACY OR COMPLETENESS OF SCANNED COPIES OF THIS PLAN SHEET.

MODIFIED 334 CABINET
Rte 99 @ Sta 483+75

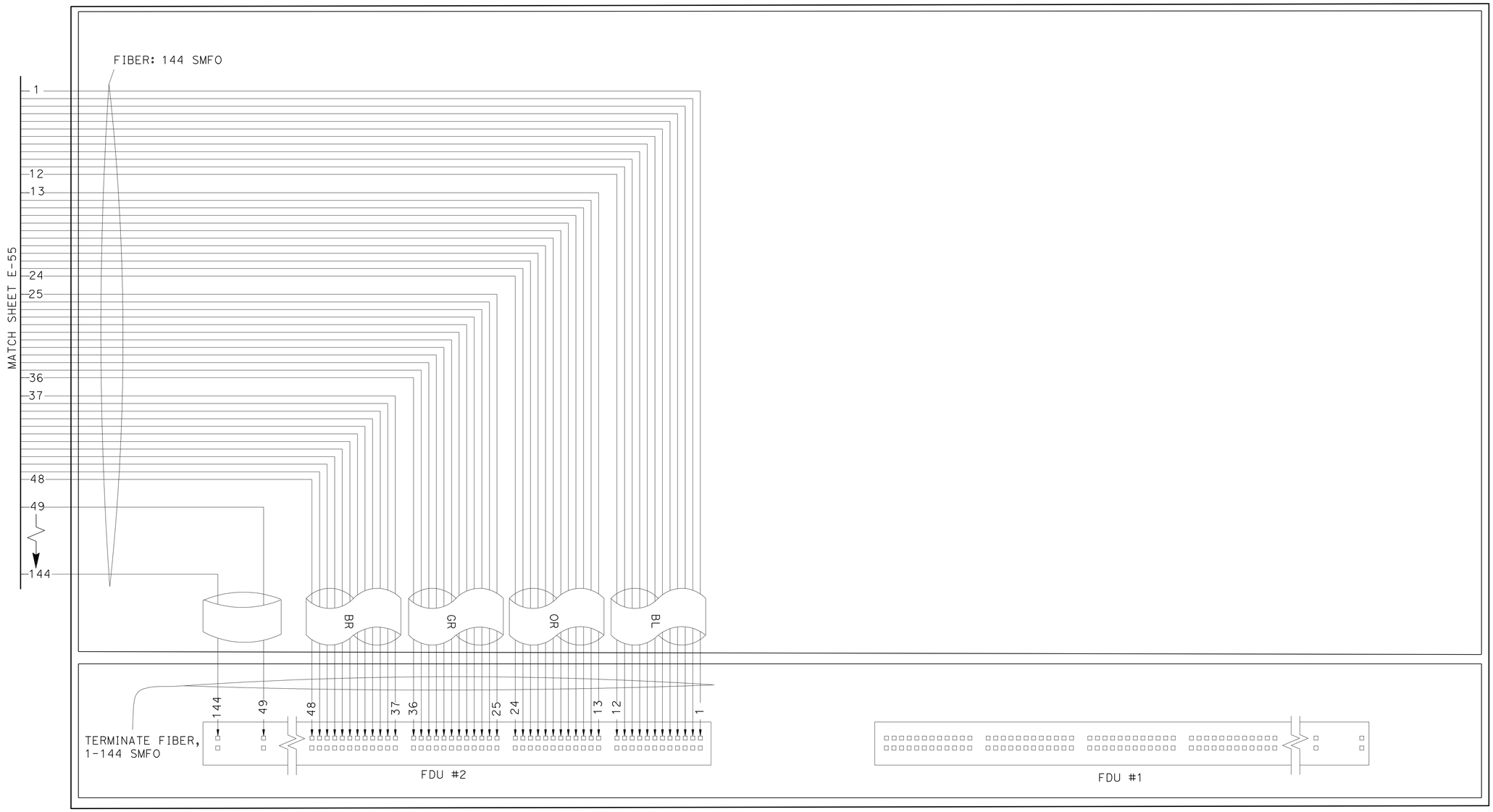

FIBER OPTIC SYSTEM
(FIBER OPTIC BLOCK BREAKOUT)

NO SCALE

E-56

APPROVED FOR ELECTRICAL WORK ONLY

STATE OF CALIFORNIA - DEPARTMENT OF TRANSPORTATION
Caltrans® 06-ELECTRICAL DESIGN

FUNCTIONAL SUPERVISOR: ALI BAKHDOUD
CALCULATED-DESIGNED BY: HASHIM KHALID
CHECKED BY: OMAR MENDOZA
REVISED BY
DATE REVISED

LAST REVISION 12-08-11
DATE PLOTTED => 28-MAR-2012
TIME PLOTTED => 13:33

Dist	COUNTY	ROUTE	POST MILES TOTAL PROJECT	SHEET No.	TOTAL SHEETS
10	SJ	4,99	R19.5/R20.1, 15.0/18.6	881	1414

REGISTERED ELECTRICAL ENGINEER 12-07-11 DATE

3-26-12
PLANS APPROVAL DATE

REGISTERED PROFESSIONAL ENGINEER HASHIM KHALID No. 18054 Exp. 6/30/13 ELECTRICAL STATE OF CALIFORNIA

THE STATE OF CALIFORNIA OR ITS OFFICERS OR AGENTS SHALL NOT BE RESPONSIBLE FOR THE ACCURACY OR COMPLETENESS OF SCANNED COPIES OF THIS PLAN SHEET.

NOTE:

ALL SMFO JUMPERS TO BE TERMINATED WITH SC COMPRESSION TYPE CONNECTORS.

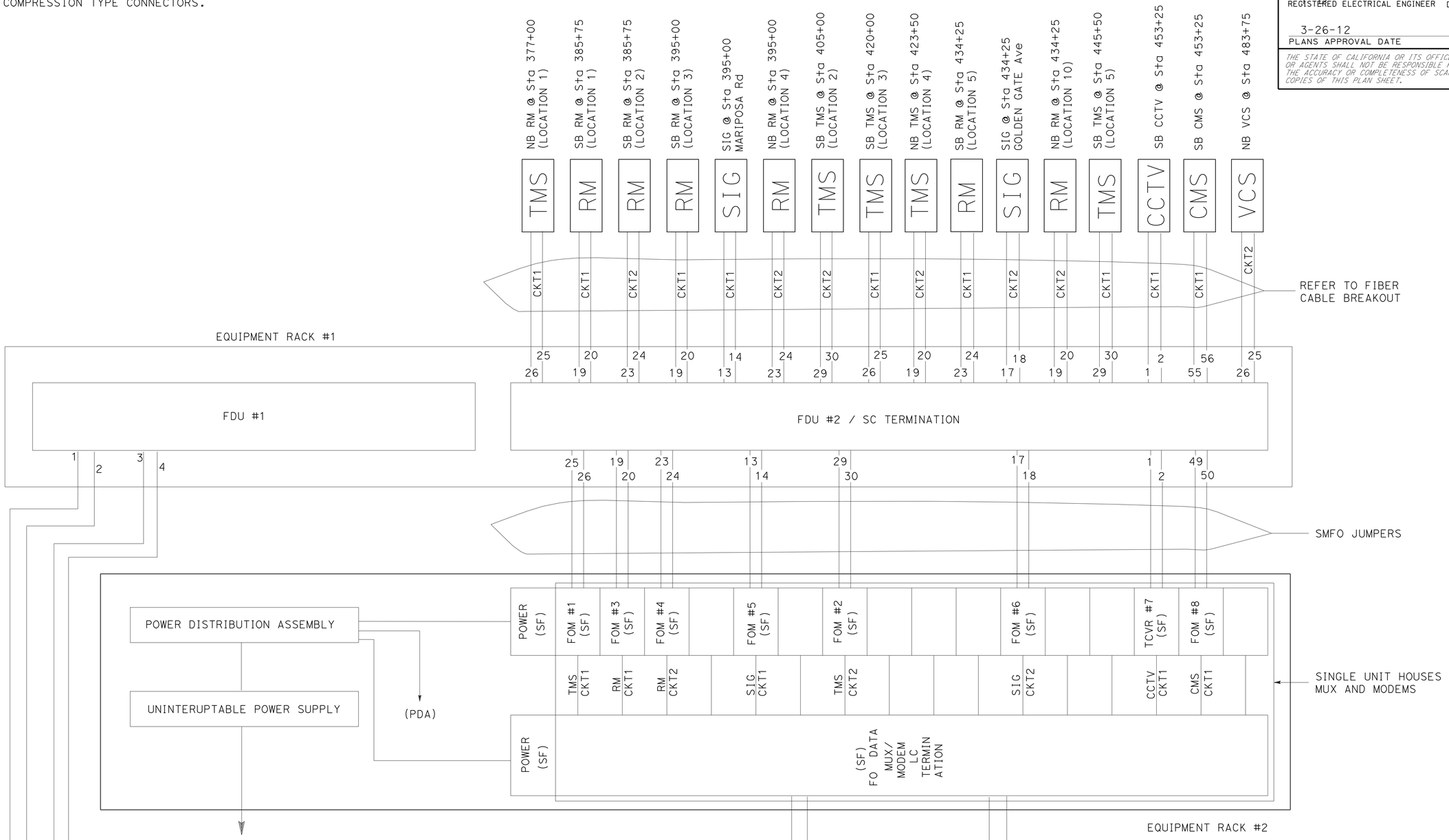

MODIFIED MODEL 334 CABINET

FIBER OPTIC SYSTEM
(FIBER EQUIPMENT RACK DETAILS)

NO SCALE

E-57

APPROVED FOR ELECTRICAL WORK ONLY

STATE OF CALIFORNIA - DEPARTMENT OF TRANSPORTATION
Caltrans 06-ELECTRICAL DESIGN

FUNCTIONAL SUPERVISOR: ALI BAKHDOUD
CALCULATED-DESIGNED BY: HASHIM KHALID
CHECKED BY: OMAR MENDOZA
REVISED BY
DATE REVISED

LAST REVISION 12-08-11 | DATE PLOTTED => 28-MAR-2012 | TIME PLOTTED => 13:33

Dist	COUNTY	ROUTE	POST MILES TOTAL PROJECT	SHEET No.	TOTAL SHEETS
10	SJ	4,99	R19.5/R20.1, 15.0/18.6	882	1414

REGISTERED ELECTRICAL ENGINEER 12-07-11 DATE

3-26-12
PLANS APPROVAL DATE

REGISTERED PROFESSIONAL ENGINEER HASHIM KHALID No. 18054 Exp. 6/30/13 ELECTRICAL STATE OF CALIFORNIA

THE STATE OF CALIFORNIA OR ITS OFFICERS OR AGENTS SHALL NOT BE RESPONSIBLE FOR THE ACCURACY OR COMPLETENESS OF SCANNED COPIES OF THIS PLAN SHEET.

NOTES: (FOR THIS SHEET ONLY)

1. 90 DEGREE SWEEPS/BENDS WILL NOT BE ALLOWED UNLESS NOTED ON THE PLAN SHEETS.
2. CONDUIT TAPERS INTO AND OUT OF VAULTS ARE TYPICAL.

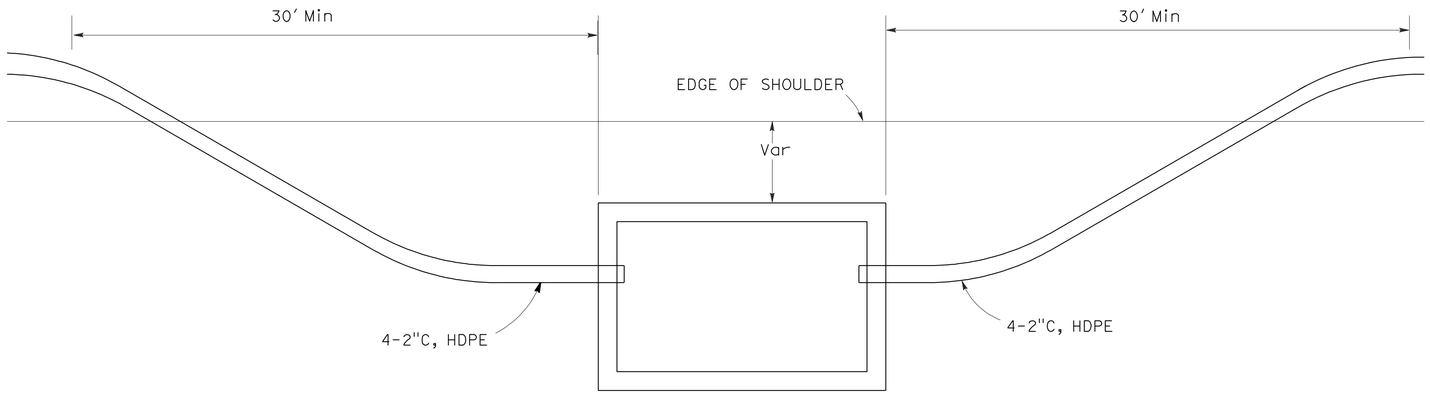

PLAN

FIBER OPTIC SYSTEM
(SPLICE VAULT AND PULL BOX INSTALLATION DETAILS)

NO SCALE

E-58

APPROVED FOR ELECTRICAL WORK ONLY

STATE OF CALIFORNIA - DEPARTMENT OF TRANSPORTATION
Caltrans 06-ELECTRICAL DESIGN

FUNCTIONAL SUPERVISOR: ALI BAKHDOUD
CALCULATED-DESIGNED BY: HASHIM KHALID
CHECKED BY: OMAR MENDOZA
REVISED BY
DATE REVISED

LAST REVISION 12-08-11
DATE PLOTTED => 28-MAR-2012
TIME PLOTTED => 13:34

Dist	COUNTY	ROUTE	POST MILES TOTAL PROJECT	SHEET No.	TOTAL SHEETS
10	SJ	4,99	R19.5/R20.1, 15.0/18.6	883	1414

REGISTERED ELECTRICAL ENGINEER 12-07-11 DATE

3-26-12
PLANS APPROVAL DATE

REGISTERED PROFESSIONAL ENGINEER HASHIM KHALID No. 18054 Exp. 6/30/13 ELECTRICAL STATE OF CALIFORNIA

THE STATE OF CALIFORNIA OR ITS OFFICERS OR AGENTS SHALL NOT BE RESPONSIBLE FOR THE ACCURACY OR COMPLETENESS OF SCANNED COPIES OF THIS PLAN SHEET.

COMMUNICATION VAULT NOTES:

1. GALVANIZED CAST-IN ANGLE FRAME.
2. TWO PIECE TRAFFIC RATED TORSION ASSISTED COVER, WITH PICK SLOTS AND BOLT DOWN HOLES. GALVANIZED AFTER FABRICATION.
3. 12" DIAMETER DRAIN HOLE. LOCATE AT CENTER.
4. 7/8" DIAMETER PULL IRONS (4 EA) Typ.
5. 16" x 4" KNOCKOUTS (8 EA) Typ.

GENERAL NOTES:

1. VAULT DESIGNED IN ACCORDANCE WITH AASHTO H-20-44 TRAFFIC BRIDGE LOADING USING 25.9 MPa COMPRESSIVE STRENGTH CONCRETE AND 413.7 MPa YIELD STRENGTH ASTM A-706 STEEL REINFORCEMENT PER CALCULATIONS.
2. VAULT TO BE PLACED ON A 12" BASE OF CRUSHED ROCK
3. EACH VAULT SHALL COME PROVIDED WITH TWO SETS BOLT/LID REMOVERS
4. ALL MOUNTING HARDWARE SHALL BE GALVANIZED OR STAINLESS STEEL.

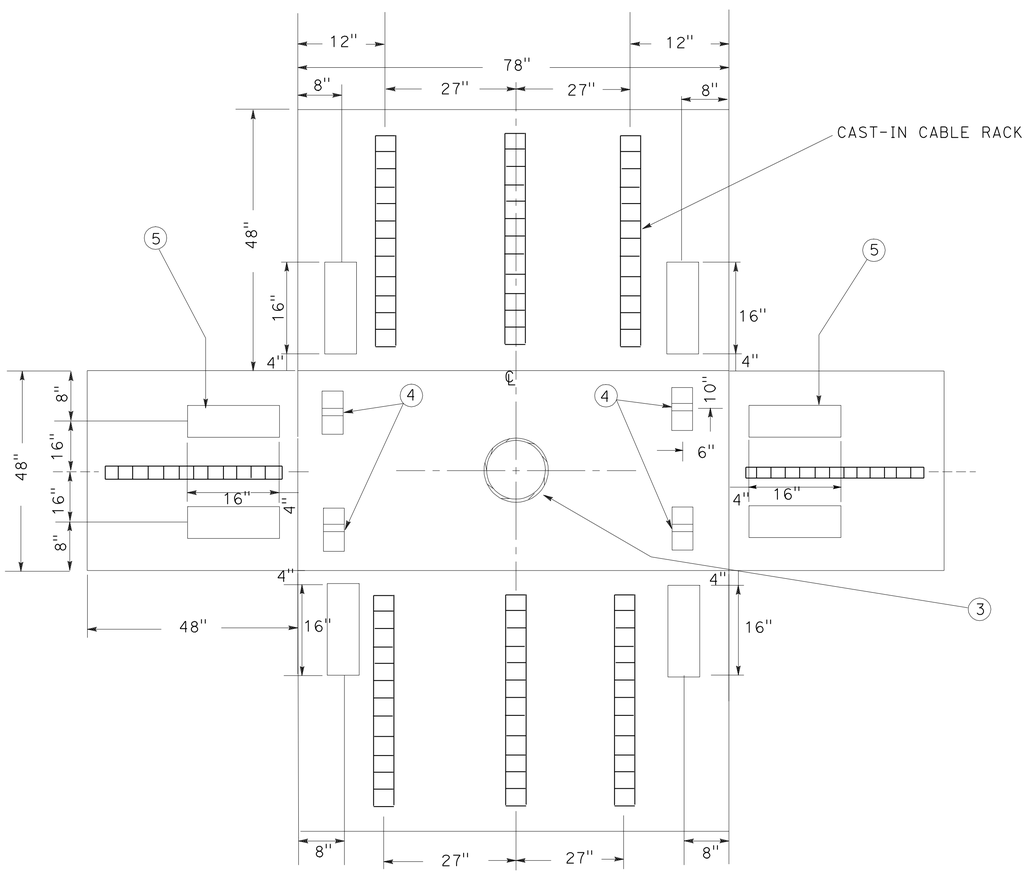

PLAN

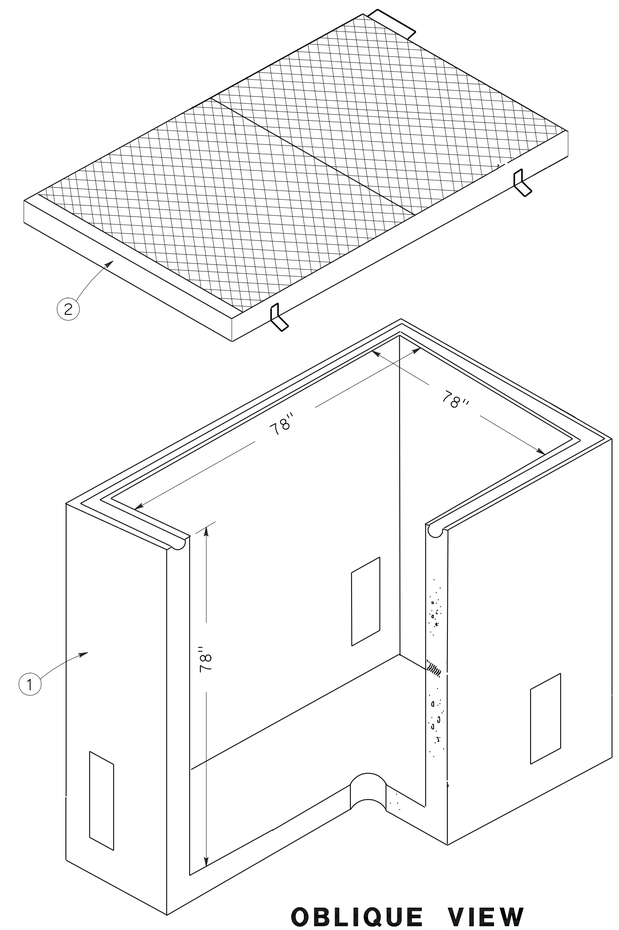

OBLIQUE VIEW

FIBER OPTIC SYSTEM
(SPLICE VAULT DETAILS)
NO SCALE

E-59

APPROVED FOR ELECTRICAL WORK ONLY

STATE OF CALIFORNIA - DEPARTMENT OF TRANSPORTATION
Caltrans® 06-ELECTRICAL DESIGN

FUNCTIONAL SUPERVISOR: ALI BAKHDOUD
CALCULATED-DESIGNED BY: HASHIM KHALID
CHECKED BY: OMAR MENDOZA
REVISED BY
DATE REVISED

LAST REVISION 12-08-11
DATE PLOTTED => 28-MAR-2012
TIME PLOTTED => 13:34

Dist	COUNTY	ROUTE	POST MILES TOTAL PROJECT	SHEET No.	TOTAL SHEETS
10	SJ	4,99	R19.5/R20.1, 15.0/18.6	884	1414

REGISTERED ELECTRICAL ENGINEER 12-07-11 DATE

3-26-12
PLANS APPROVAL DATE

REGISTERED PROFESSIONAL ENGINEER HASHIM KHALID No. 18054 Exp. 6/30/13 ELECTRICAL STATE OF CALIFORNIA

THE STATE OF CALIFORNIA OR ITS OFFICERS OR AGENTS SHALL NOT BE RESPONSIBLE FOR THE ACCURACY OR COMPLETENESS OF SCANNED COPIES OF THIS PLAN SHEET.

NOTES: (FOR THIS SHEET ONLY)

1. ANY FIBER OPTIC CONDUIT INSTALLED WITHIN 3′ OF GUARD RAILING SHALL BE 55" MINIMUM DEPTH TO TOP OF CONDUIT.
2. ALL FIBER OPTIC CONDUITS SHALL BE FITTED WITH UNDERGROUND RATED CONDUIT SPACERS AT INCREMENTS OF 10′.

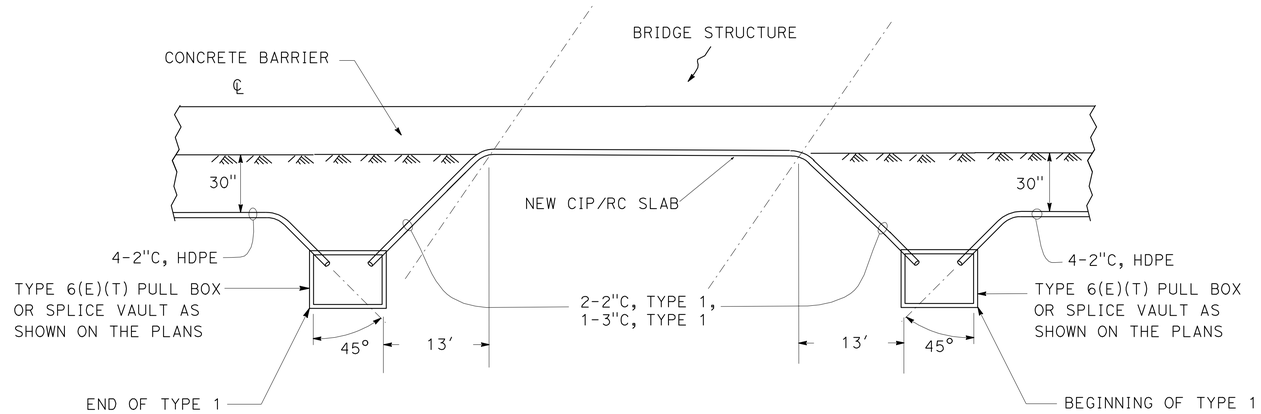

COMMUNICATION CONDUIT SWEEPS DETAIL IN CONCRETE BARRIER ON THE STRUCTURES

DETAIL C

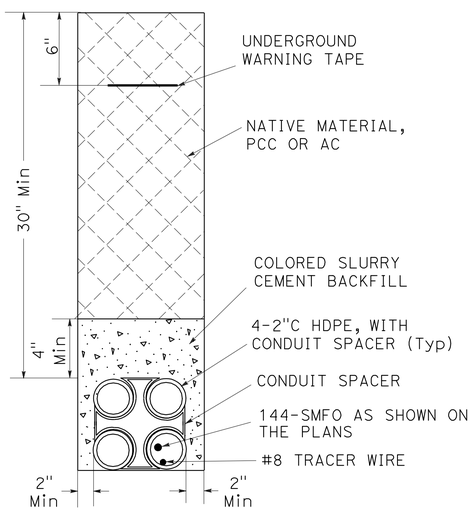

TRENCH IN DIRT/PAVEMENT DETAIL 4-2"C HDPE CONDUIT

DETAIL A

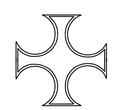

CONDUIT SPACER (Typ)

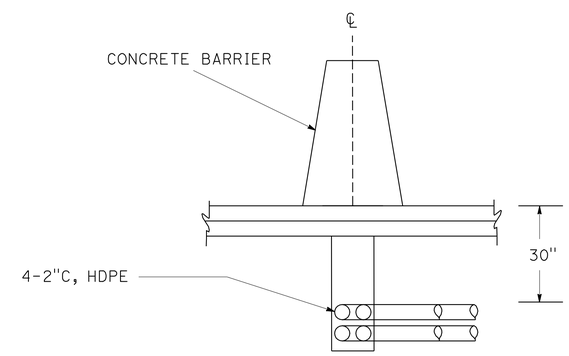

COMMUNICATION CONDUIT PLACEMENT DETAIL UNDER BARRIER

DETAIL B

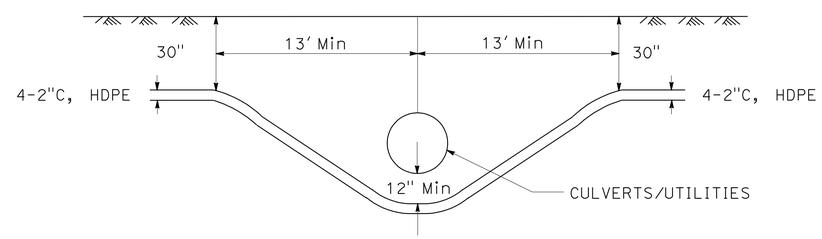

DETAIL D

APPROVED FOR ELECTRICAL WORK ONLY

FIBER OPTIC SYSTEM (PLACEMENT DETAILS)

NO SCALE

E-60

STATE OF CALIFORNIA - DEPARTMENT OF TRANSPORTATION
Caltrans® 06-ELECTRICAL DESIGN

FUNCTIONAL SUPERVISOR: ALI BAKHDOUD
CALCULATED-DESIGNED BY: HASHIM KHALID
CHECKED BY: OMAR MENDOZA
REVISED BY
DATE REVISED

LAST REVISION 12-08-11
DATE PLOTTED => 28-MAR-2012
TIME PLOTTED => 13:34

Dist	COUNTY	ROUTE	POST MILES TOTAL PROJECT	SHEET No.	TOTAL SHEETS
10	SJ	4,99	R19.5/R20.1, 15.0/18.6	885	1414

REGISTERED ELECTRICAL ENGINEER 12-07-11 DATE

3-26-12
PLANS APPROVAL DATE

REGISTERED PROFESSIONAL ENGINEER HASHIM KHALID No. 18054 Exp. 6/30/13 ELECTRICAL STATE OF CALIFORNIA

THE STATE OF CALIFORNIA OR ITS OFFICERS OR AGENTS SHALL NOT BE RESPONSIBLE FOR THE ACCURACY OR COMPLETENESS OF SCANNED COPIES OF THIS PLAN SHEET.

NOTE:

ALL SIGNS SHALL BE APPROVED FOR CONFORMANCE BY THE CITY TRAFFIC DEVICES STAFF PRIOR TO INSTALLATION.

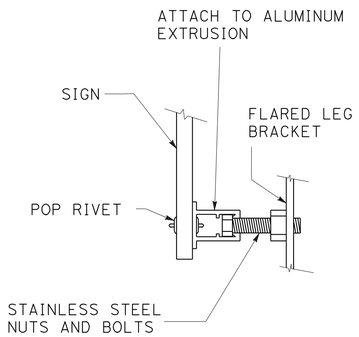

SECTION A-A

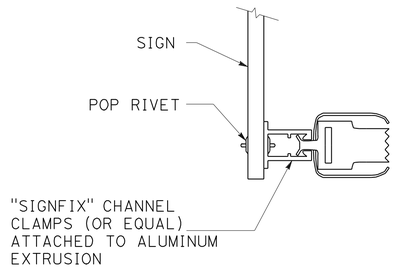

SECTION B-B

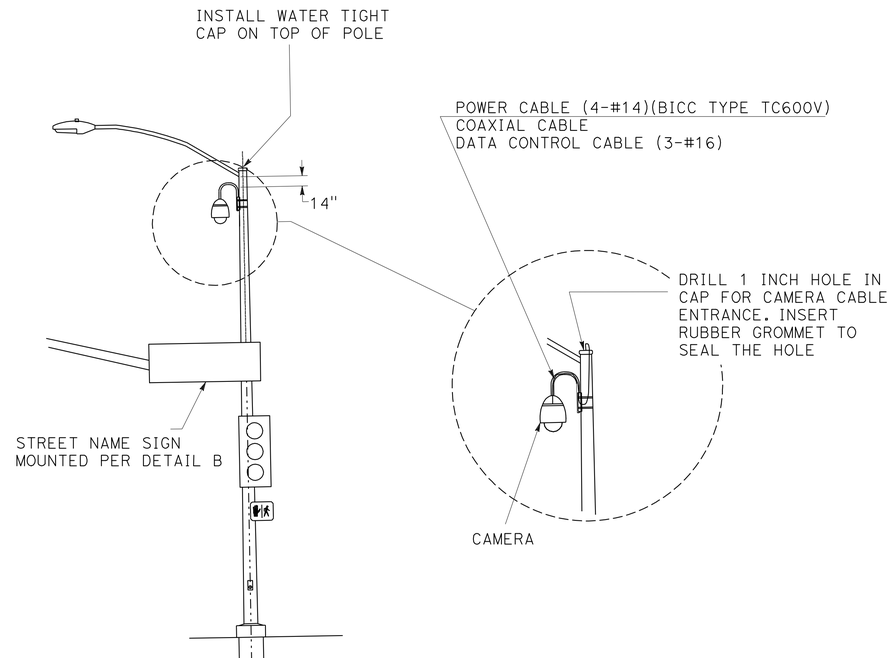

SIGNAL POLE
CAMERA MOUNT DETAIL
DETAIL A

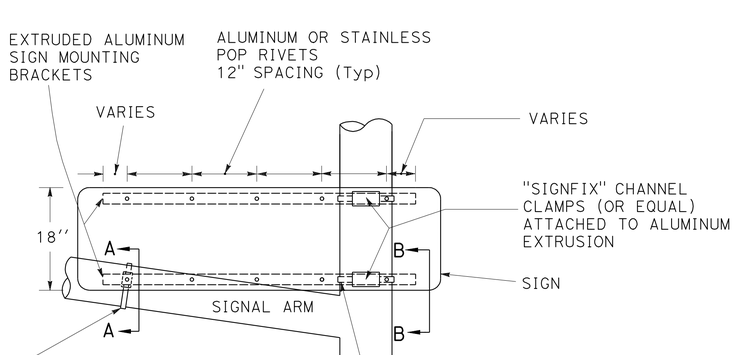

TRAFFIC SIGNAL ARM SIGN MOUNTING
DETAIL B

SIGNAL AND LIGHTING (CITY STREET)
(CITY ELECTRICAL DETAILS)

NO SCALE

E-61

APPROVED FOR ELECTRICAL WORK ONLY

STATE OF CALIFORNIA - DEPARTMENT OF TRANSPORTATION
Caltrans® 06-ELECTRICAL DESIGN

FUNCTIONAL SUPERVISOR: ALI BAKHDOUD
CALCULATED-DESIGNED BY: HASHIM KHALID
CHECKED BY: OMAR MENDOZA
REVISED BY
DATE REVISED

LAST REVISION 12-08-11 | DATE PLOTTED => 28-MAR-2012 | TIME PLOTTED => 13:34

DIST	COUNTY	ROUTE	POST MILES TOTAL PROJECT	SHEET No	TOTAL SHEETS
10	SJ	4,99	R19.5/R20.1, 15.0/18.6	886	1414

Mahfoud A. Licha 10/14/11
REGISTERED CIVIL ENGINEER DATE

3-26-12
PLANS APPROVAL DATE

REGISTERED PROFESSIONAL ENGINEER MAHFOUD A. LICHA No. C62816 Exp. 6/30/12 CIVIL STATE OF CALIFORNIA

The State of California or its officers or agents shall not be responsible for the accuracy or completeness of scanned copies of this plan sheet.

TABLE A

POLE TYPE	POLE DATA				BASE PLATE DATA - SEE 2006 RSP ES-7B			STRUCTURAL STEEL LBS PLUS 3.5% GALVANIZING
	HEIGHT	Min OD		THICKNESS	THICKNESS	ANCHOR BOLTS		
		BASE	TOP			SIZE	BC = BOLT CIRCLE	
1-D (Modified)	10'	5 1/4"	4 1/2"	0.1196"	3/4"	1" x 1'-6" x 3"	8 1/2"	104

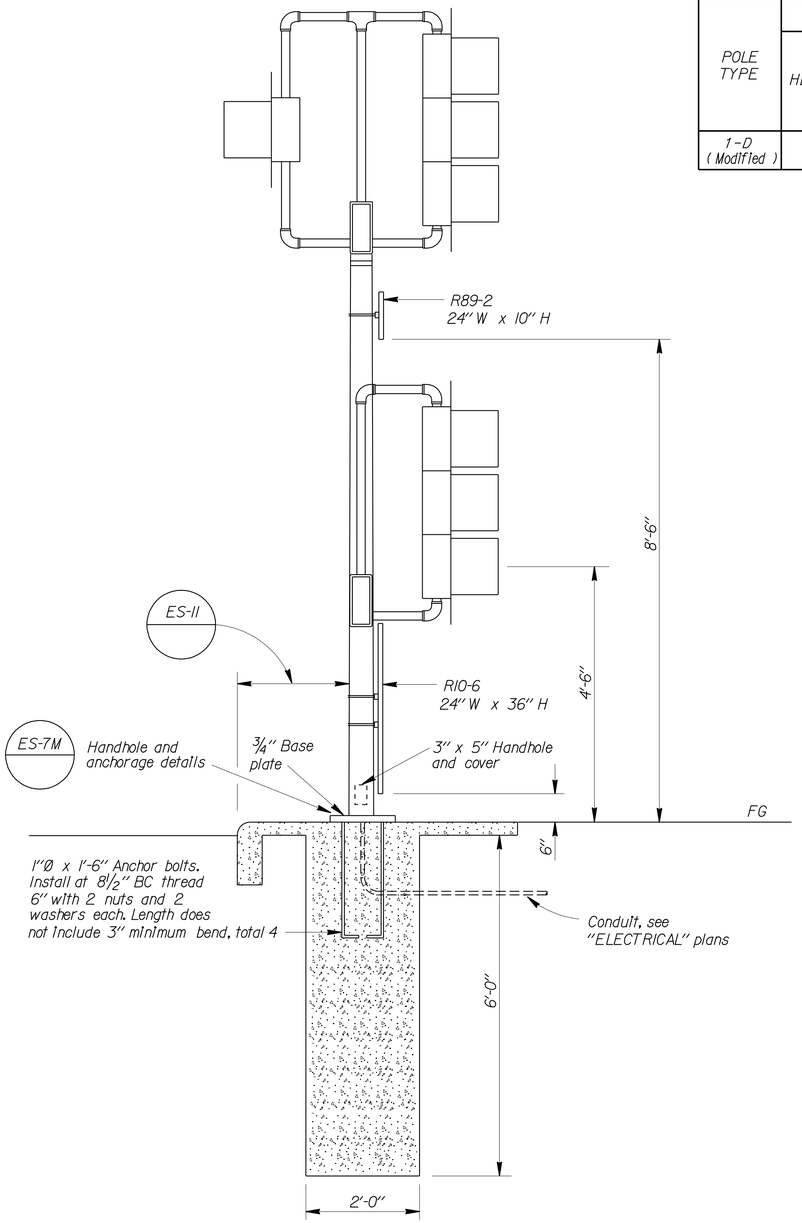

ELEVATION

Type 1-D Pole (Modified)

GENERAL NOTES:

SPECIFICATIONS

Design : AASHTO Standard Specifications for Structural Supports for Highway Signs, Luminaires and Traffic Signals dated 2001.

LOADING

Wind Loadings : 100 mph

UNIT STRESSES

Structural Steel : fy = 48,000 psi tapered steel tube
fy = 36,000 psi unless otherwise noted.

Anchor bolts = A307

Reinforced Concrete : f'c = 3,600 psi
fy = 60,000 psi

NOTES:

1. For pole locations, see "ELECTRICAL" plans.
2. All steel shall be galvanized after fabrication.
3. During pole erection, the post shall be raked as necessary with the use of leveling nuts to provide a plumb pole axis.
4. The foundation shall be treated as level ground condition if the slope inclination is flatter than 4H:1V.
5. Foundation design is based on AASHTO 2001 article 13.6 Broms' approximate procedure assuming a cohesionless material. The angle of internal friction used is 30 degrees and unit weight of soil used is 120 lbs/ft³.
6. For details not shown, see "2006 STANDARD PLANS" and "2006 REVISED STANDARD PLANS".

NOTE:
THE CONTRACTOR SHALL VERIFY ALL CONTROLLING FIELD DIMENSIONS BEFORE ORDERING OR FABRICATING ANY MATERIAL.

STANDARD PLAN SHEET No.
DETAIL No.

NO SCALE

BRANCH CHIEF *JEFF WOODY*

	BY	CHECKED
DESIGN	MAHFOUD LICHA	ELISEO LOPEZ
DETAILS	R. YEE	MAHFOUD LICHA
QUANTITIES	MAHFOUD LICHA	ELISEO LOPEZ

STATE OF CALIFORNIA
DEPARTMENT OF TRANSPORTATION

DIVISION OF ENGINEERING SERVICES
DESIGN AND TECHNICAL SERVICES
SPECIAL DESIGNS BRANCH A

BRIDGE NO.
POST MILE

TYPE 1-D MODIFIED POLE DETAILS

SES-1

(ENGLISH) SPECIAL DESIGNS BRANCH BORDER SHEET (REV. 7-1-09)

ORIGINAL SCALE IN INCHES FOR REDUCED PLANS 0 1 2 3

UNIT: 3619
PROJECT NUMBER & PHASE: 1000000409-1 CONTRACT NO.: 10-3A1001

DISREGARD PRINTS BEARING EARLIER REVISION DATES

REVISION DATES 9/8/11 10/14/11 12/15/13

SHEET OF

FILE => 2011sd/10-3A1001/ses1.dgn

USERNAME => s12614 DATE PLOTTED => 28-MAR-2012 TIME PLOTTED => 13:53

DIST	COUNTY	ROUTE	POST MILES TOTAL PROJECT	SHEET No	TOTAL SHEETS
10	SJ	4,99	R19.5/R20.1, 15.0/18.6	887	1414

Mahfoud A. Licha 12/12/11
REGISTERED CIVIL ENGINEER DATE

3-26-12
PLANS APPROVAL DATE

REGISTERED PROFESSIONAL ENGINEER MAHFOUD A. LICHA No. C62816 Exp. 6/30/12 CIVIL STATE OF CALIFORNIA

The State of California or its officers or agents shall not be responsible for the accuracy or completeness of scanned copies of this plan sheet.

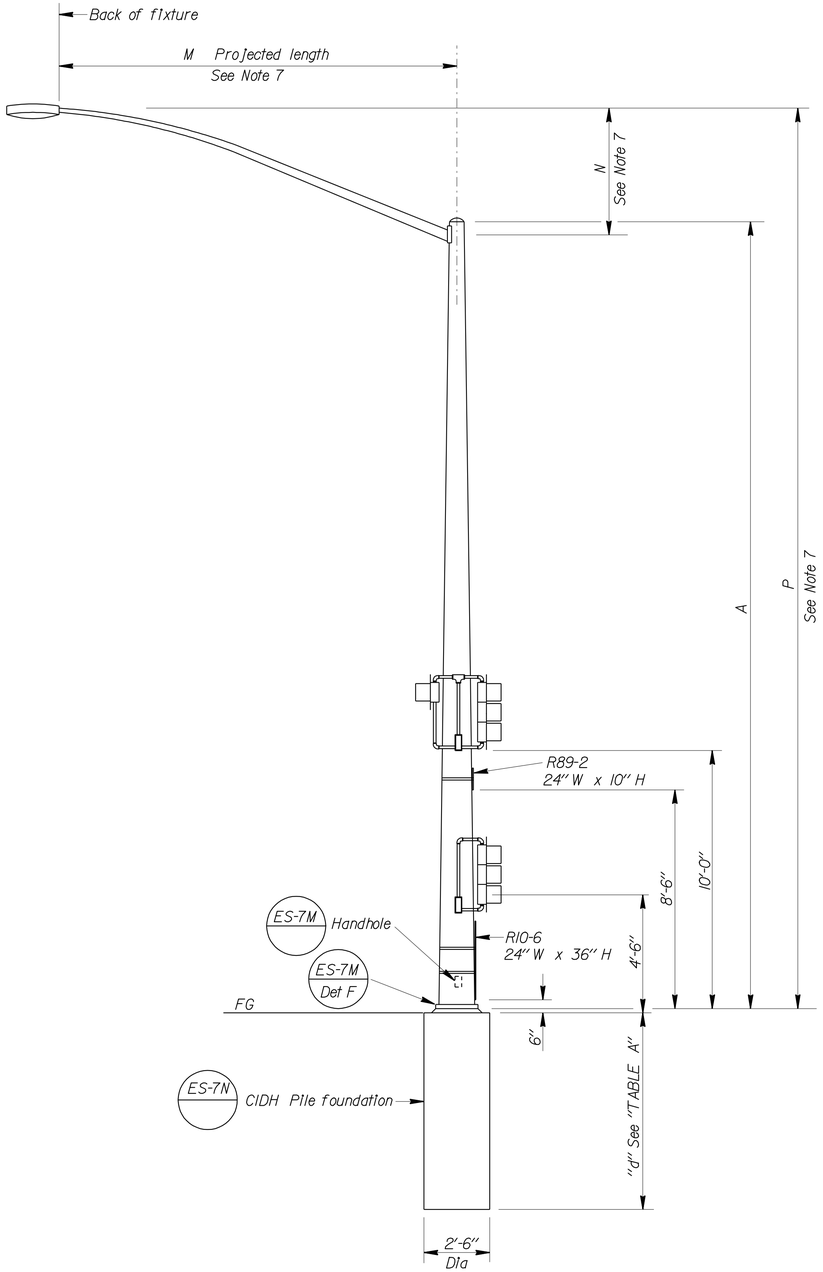

ELEVATION

Type 15TS (Modified)

NOTE:
THE CONTRACTOR SHALL VERIFY ALL CONTROLLING FIELD DIMENSIONS BEFORE ORDERING OR FABRICATING ANY MATERIAL.

TABLE A								"d" 2'-6" Ø CIDH Pile	
POLE DATA				BASE PLATE DATA					
A HEIGHT	Min OD BASE	Min OD TOP	WALL THICKNESS	C	BC = BOLT CIRCLE	THICKNESS	ANCHOR BOLT SIZE	LEVEL GROUND	SLOPING GROUND
30'	8"	3 7/8"	0.1793"	1'-0"	1'-0"	1"	1 1/4" Ø x 42" x 6"	8'-0"	10'-0"

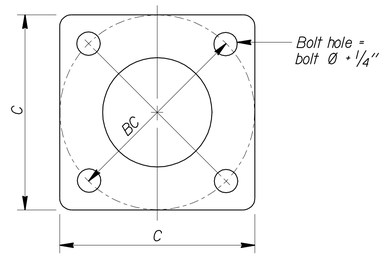

BASE PLATE

STANDARD PLAN SHEET No.
DETAIL No.

NO SCALE

GENERAL NOTES:

SPECIFICATIONS

Design : AASHTO Standard Specifications for Structural Supports for Highway Signs, Luminaires and Traffic Signals dated 2001.

LOADING

Wind Loadings : 100 MPH

UNIT STRESSES

Structural Steel : fy = 48,000 psi tapered steel tube
fy = 36,000 psi unless otherwise noted.

Anchor bolts = A307

Reinforced Concrete : f'c = 3,600 psi
fy = 60,000 psi

NOTES:

1. For pole locations, see "ELECTRICAL" plans.
2. All steel shall be galvanized after fabrication.
3. During pole erection, the post shall be raked as necessary with the use of leveling nuts to provide a plumb pole axis.
4. The foundation shall be treated as level ground condition if the slope inclination is flatter than 4H:1V.
5. Foundation design is based on AASHTO 2001 article 13.6 Broms' approximate procedure assuming a cohesionless material. The angle of internal friction used is 30 degrees and unit weight of soil used is 120 lbs/ft³.
6. For details not shown, see "2006 STANDARD PLANS" and "2006 REVISED STANDARD PLANS".
7. For additional details and data for Type 15TS Standard, see Standard Plan RSP ES-6A.

BRANCH CHIEF JEFF WOODY

	BY	CHECKED
DESIGN	MAHFOUD LICHA	ELISEO LOPEZ
DETAILS	R. YEE	MAHFOUD LICHA
QUANTITIES		

STATE OF CALIFORNIA
DEPARTMENT OF TRANSPORTATION

DIVISION OF ENGINEERING SERVICES
DESIGN AND TECHNICAL SERVICES
SPECIAL DESIGNS BRANCH A

BRIDGE NO. N/A
POST MILE 15.0/18.6

TYPE 15TS MODIFIED POLE DETAILS

SES-2

(ENGLISH) SPECIAL DESIGNS BRANCH BORDER SHEET (REV. 7-1-09)

ORIGINAL SCALE IN INCHES FOR REDUCED PLANS 0 1 2 3

UNIT: 3619
PROJECT NUMBER & PHASE: 1000000409-1 CONTRACT NO.: 10-3A1001

DISREGARD PRINTS BEARING EARLIER REVISION DATES 12/12/11 12/15/11

REVISION DATES | SHEET | OF

FILE => 2011sd/10-3A1001/ses2.dgn

USERNAME => s121614 DATE PLOTTED => 28-MAR-2012 TIME PLOTTED => 13:53

DIST	COUNTY	ROUTE	POST MILES TOTAL PROJECT	SHEET No	TOTAL SHEETS
10	SJ	4,99	R19.5/R20.1, 15.0/18.6	888	1414

Mahfoud A. Licha 12/8/11
REGISTERED CIVIL ENGINEER DATE

3-26-12
PLANS APPROVAL DATE

REGISTERED PROFESSIONAL ENGINEER MAHFOUD A. LICHA No. C62816 Exp. 6/30/12 CIVIL STATE OF CALIFORNIA

The State of California or its officers or agents shall not be responsible for the accuracy or completeness of electronic copies of this plan sheet.

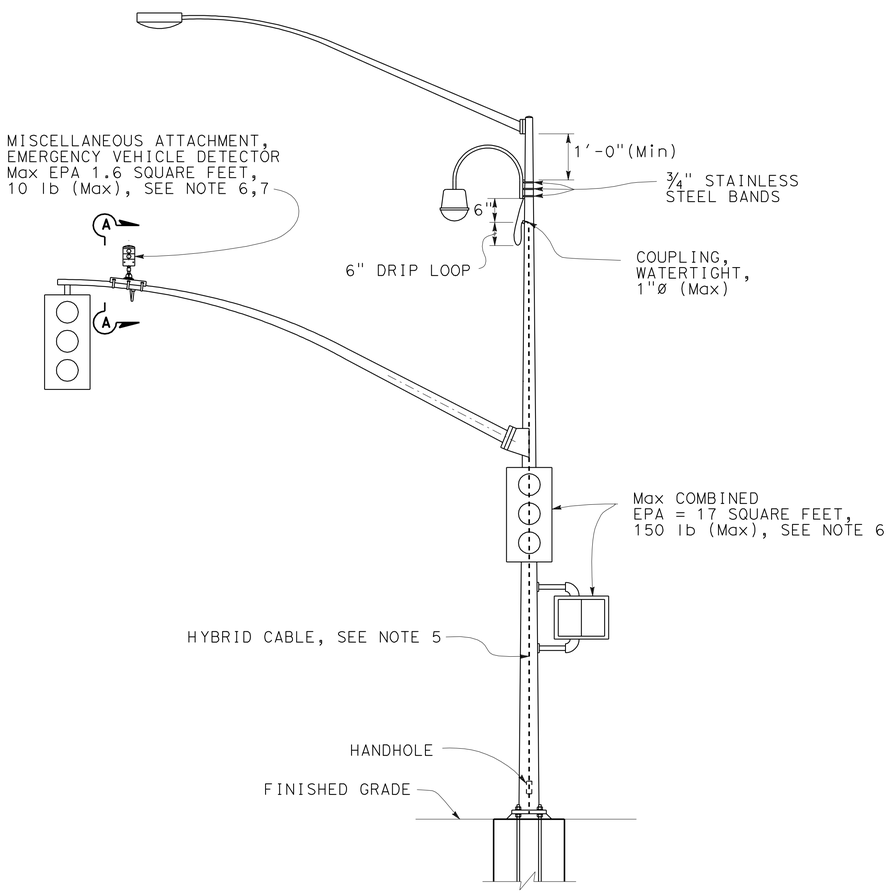

SIGNAL MOUNTING DETAILS

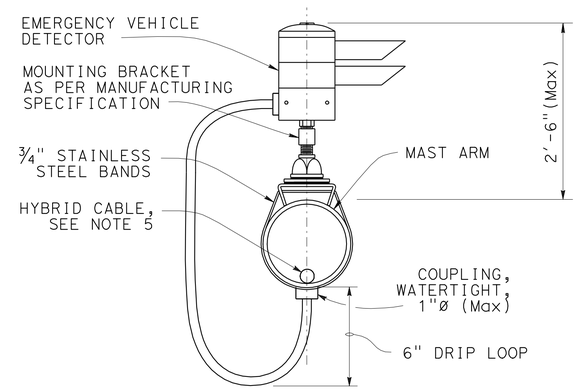

SECTION A-A

NOTES:

1. Exact mounting location of miscellaneous attachment and bracket shall be approved by the Engineer per manufacturer's recommendation.
2. Location of cable entrances on signal pole shall be a minimum of 1' from any flange or base plate.
3. Hybrid cable entrances on signal pole shall be drilled for watertight coupling as required.
4. Hybrid cable shall have a drip loop at the entrance into signal pole, luminaire mast arm and signal mast arm.
5. A single hybrid cable shall run continuous and shall not be twisted from the miscellaneous attachment to the controller cabinet. No splices shall be allowed.
6. Use the manufacturer's Effective Projected Area (EPA) for miscellaneous attachment. The maximum EPA for each miscellaneous attachment shall be 1.6 square feet.
7. Maximum of two miscellaneous attachments per traffic signal structure.
8. Maximum of one miscellaneous attachment per mast arm.
9. Miscellaneous attachment shall be mounted using clamping devices.
9. For details not shown, see 2006 "STANDARD PLANS" and 2006 "REVISED STANDARD PLANS".

THE CONTRACTOR SHALL VERIFY ALL CONTROLLING FIELD DIMENSIONS BEFORE ORDERING OR FABRICATING ANY MATERIAL.

NO SCALE

BRANCH CHIEF JEFFREY B WOODY

	BY	CHECKED
DESIGN	M LICHA	E LOPEZ
DETAILS	A R DUDSAK	M LICHA
QUANTITIES		

STATE OF CALIFORNIA
DEPARTMENT OF TRANSPORTATION

DIVISION OF ENGINEERING SERVICES
DESIGN AND TECHNICAL SERVICES
SPECIAL DESIGNS BRANCH A

BRIDGE NO. N/A
POST MILE 15.0/18.6

ELECTRICAL SYSTEMS
SIGNAL AND LIGHTING, MISCELLANEOUS ATTACHMENT

SES-3

(ENGLISH) SPECIAL DESIGNS BRANCH BORDER SHEET (REV. 7-1-09)

ORIGINAL SCALE IN INCHES FOR REDUCED PLANS 0 1 2 3

UNIT: 3619
PROJECT NUMBER & PHASE: 10000004091
CONTRACT NO.: 10-3A1001

DISREGARD PRINTS BEARING EARLIER REVISION DATES
REVISION DATES 11-10-11 11-30-11 12-5-11
SHEET X OF X

FILE => spec_des_br_prj/2011sd/10-3A1001/10-3a1001_ses-3.dgn

USERNAME => s126614 DATE PLOTTED => 30-MAR-2012 TIME PLOTTED => 11:29

DIST	COUNTY	ROUTE	POST MILES TOTAL PROJECT	SHEET No	TOTAL SHEETS
10	SJ	4,99	R19.5/R20.1, 15.0/18.6	889	1414

Mahfoud A. Licha 12/8/11
REGISTERED CIVIL ENGINEER DATE

3-26-12
PLANS APPROVAL DATE

REGISTERED PROFESSIONAL ENGINEER MAHFOUD A. LICHA No. C62816 Exp. 6/30/12 CIVIL STATE OF CALIFORNIA

The State of California or its officers or agents shall not be responsible for the accuracy or completeness of electronic copies of this plan sheet.

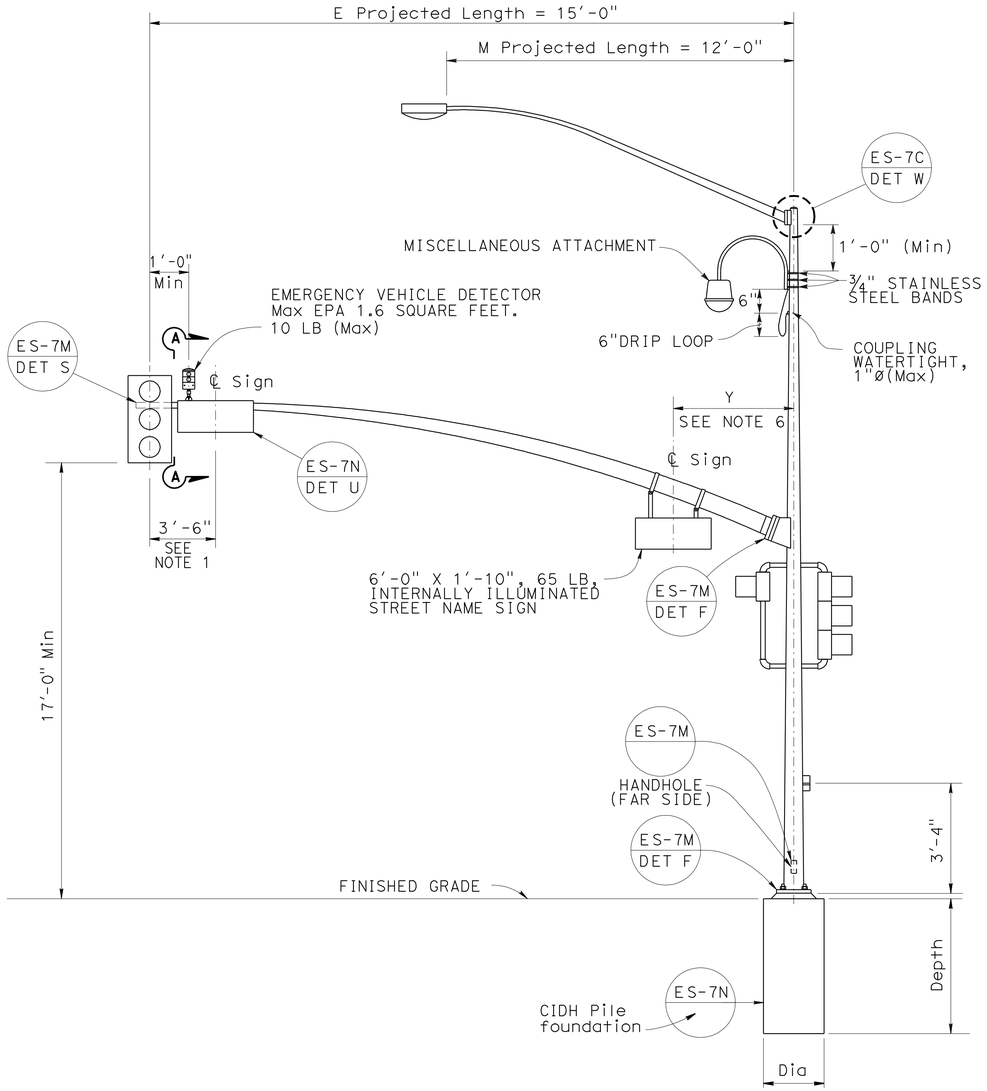

TYPE 17-3-100 MODIFIED ELEVATION

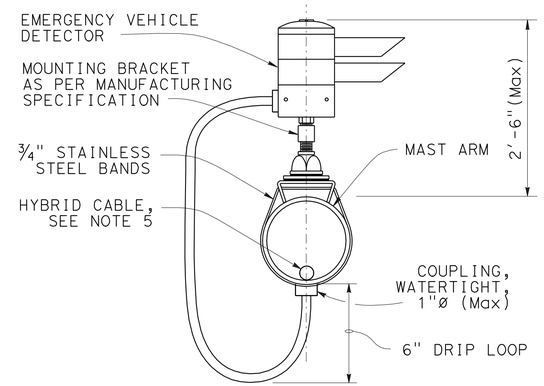

SECTION A-A

GENERAL NOTES:

SPECIFICATIONS

DESIGN : AASHTO Standard Specifications for structural supports for highway signs, luminaires and traffic signals dated 2001 and including interims for 2002 and 2004.

LOADING

Wind Loadings : 100 mph

UNIT STRESSES

Structural Steel : fy = 48,000 psi tapered steel tube
fy = 36,000 psi unless otherwise noted
Anchor Bolts : = A307
Reinforced Concrete : f'_c = 3,600 psi
fy = 60,000 psi

NOTES:

1. For details not shown, see "2006 STANDARD PLANS" and "2006 REVISED STANDARD PLANS".
2. For Type 17-3-100 Modified pole location, see Electrical Sheets.
3. All steel shall be galvanized after fabrication.
4. During pole erection, the post shall be raked as necessary with the use of leveling nuts to provide a plumb pole axis.
5. Foundation design is based on 2001 AASHTO article 13.6 Broms' approximate procedure assuming a coheshionless material. The angle of internal friction used is 30° and unit weight of soil used is 120 lbs/ft^3.
6. Maximum Y distance is 5'-0".

Pole Type	Load Case	Wind Velocity mph	POLE DATA				BASE PLATE DATA				CIDH PILE FOUNDATION			
			A Height	Min OD Base	Min OD Top	Thickness	C	DI Bolt Circle	Thickness	Anchor Bolts Size	Dia	Depth Level Ground	Depth Sloping Ground	Reinforced
17-3-100	3	100	30'-0"	10¾"	6⅝"	0.1793"	1'-6"	1'-5½"	1½"	2"ø x 42" x 6"	3'-0"	10'-0"	12'-0"	Yes

THE CONTRACTOR SHALL VERIFY ALL CONTROLLING FIELD DIMENSIONS BEFORE ORDERING OR FABRICATING ANY MATERIAL.

NO SCALE

BRANCH CHIEF JEFFREY B WOODY

	BY	CHECKED
DESIGN	M LICHA	E LOPEZ
DETAILS	A R DUDSAK	M LICHA
QUANTITIES		

STATE OF CALIFORNIA
DEPARTMENT OF TRANSPORTATION

DIVISION OF ENGINEERING SERVICES
DESIGN AND TECHNICAL SERVICES
SPECIAL DESIGNS BRANCH A

BRIDGE NO. N/A
POST MILE 15.0/18.6

ELECTRICAL SYSTEMS
SIGNAL AND LIGHTING, MISCELLANEOUS ATTACHMENT

SES-4

(ENGLISH) SPECIAL DESIGNS BRANCH BORDER SHEET (REV. 7-1-09)

ORIGINAL SCALE IN INCHES FOR REDUCED PLANS 0 1 2 3

UNIT: 3619
PROJECT NUMBER & PHASE: 10000004091
CONTRACT NO.: 10-3A1001

DISREGARD PRINTS BEARING EARLIER REVISION DATES
REVISION DATES 11-10-11 11-30-11 12-6-11 12-8-11
SHEET X OF X

FILE => spec_des_br_prj/2011sd/10-3A1001/10-3a1001_ses-4.dgn

USERNAME => s12161d DATE PLOTTED => 30-MAR-2012 TIME PLOTTED => 11:29

DIST	COUNTY	ROUTE	POST MILES TOTAL PROJECT	SHEET NO.	TOTAL SHEETS
10	SJ	4,99	R19.5/R20.1, 15.0/18.6	890	1414

REGISTERED CIVIL ENGINEER

June 6, 2008
PLANS APPROVAL DATE

REGISTERED PROFESSIONAL ENGINEER
Donald E. Howe
No. C46402
Exp. 3-31-09
CIVIL
STATE OF CALIFORNIA

The State of California or its officers or agents shall not be responsible for the accuracy or completeness of electronic copies of this plan sheet.

To accompany plans dated 3-26-12

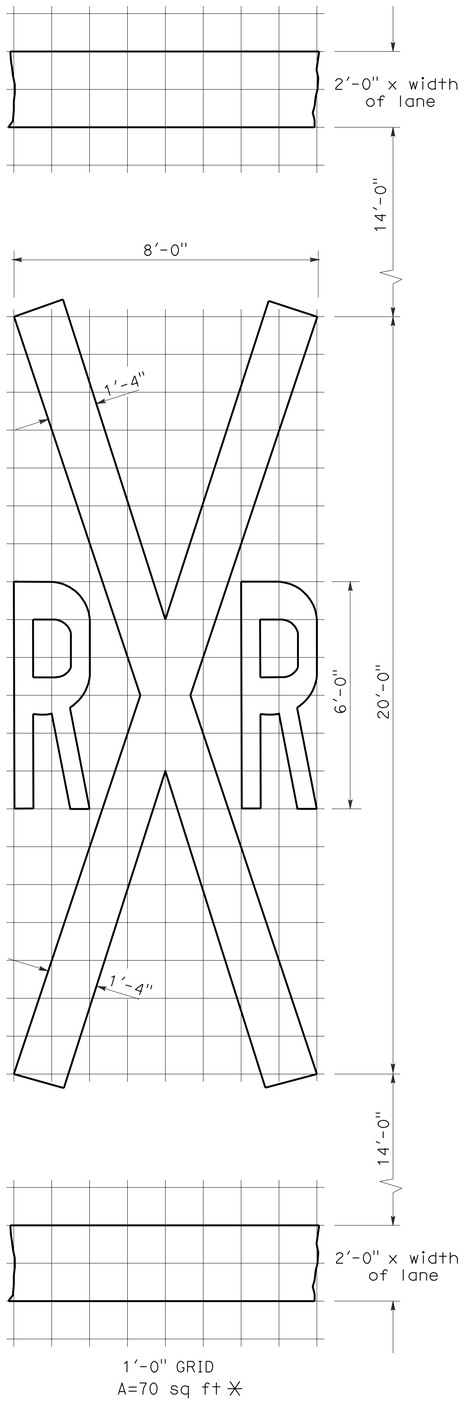

RAILROAD CROSSING SYMBOL

✳70 sq ft DOES NOT INCLUDE THE 2'-0" x VARIABLE WIDTH TRANSVERSE LINES.

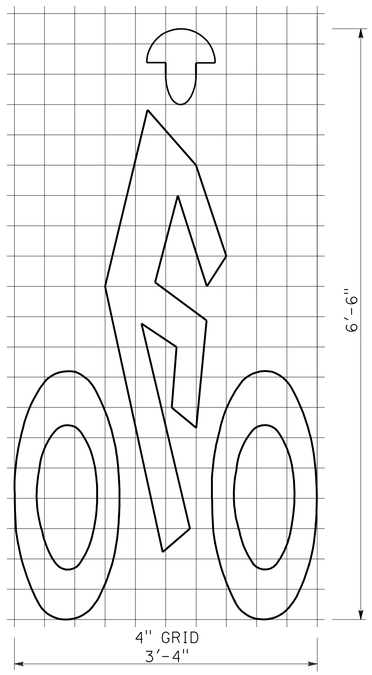

BIKE LANE SYMBOL

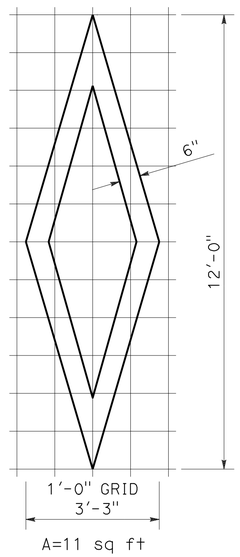

DIAMOND SYMBOL

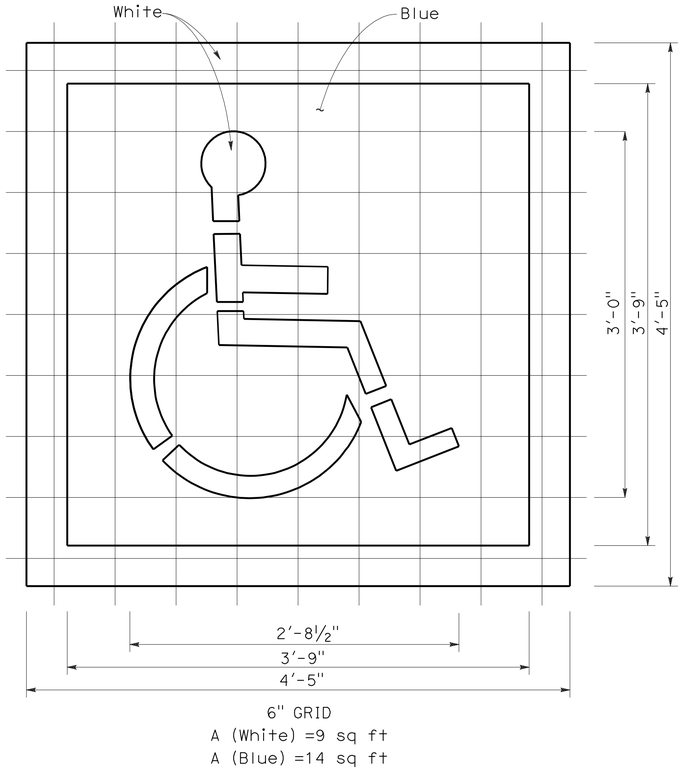

INTERNATIONAL SYMBOL OF ACCESSIBILITY MARKING

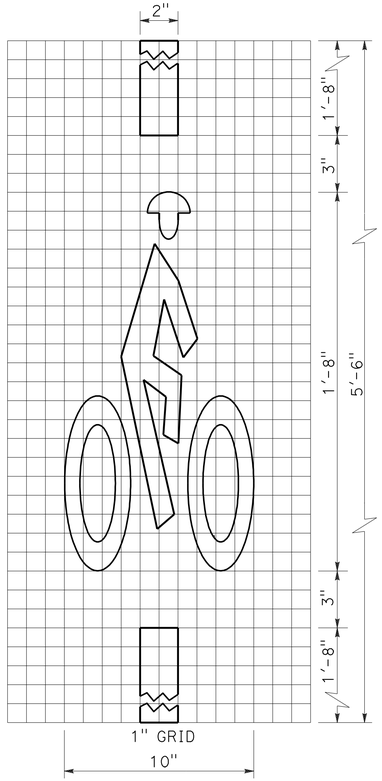

BICYCLE LOOP DETECTOR SYMBOL

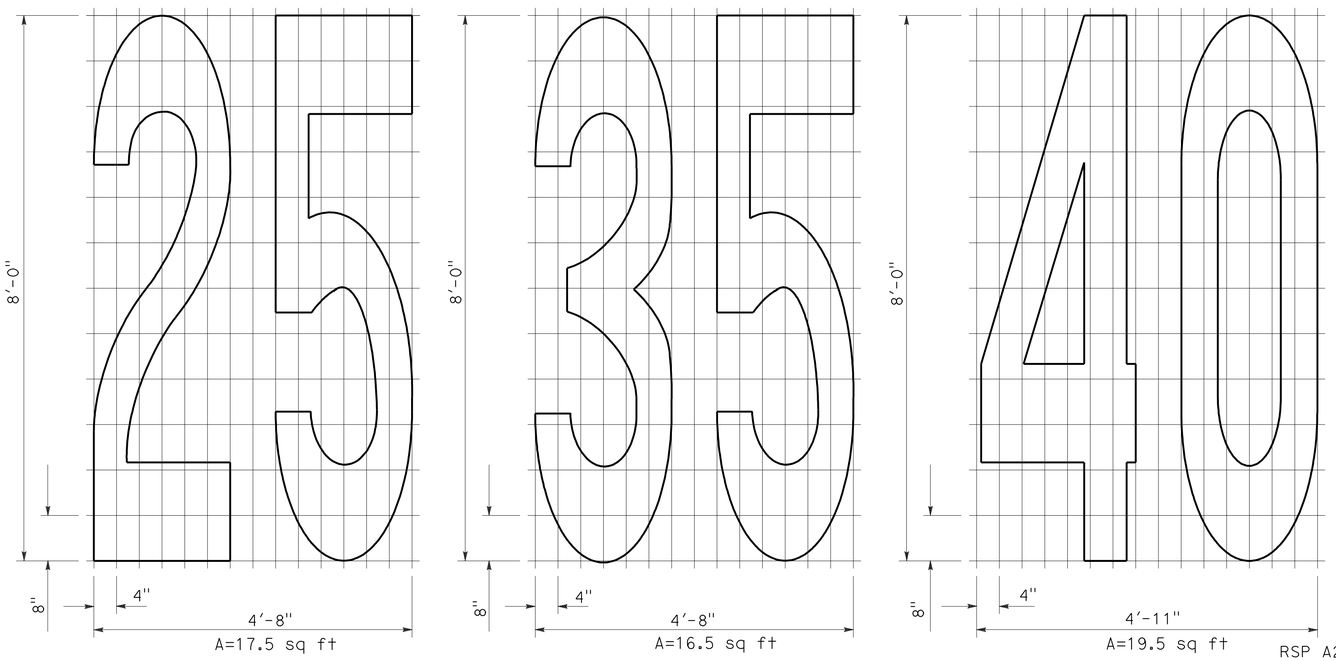

NUMERALS

NOTE:

1. Minor variations in dimensions may be accepted by the Engineer.

STATE OF CALIFORNIA
DEPARTMENT OF TRANSPORTATION

PAVEMENT MARKINGS SYMBOLS AND NUMERALS

NO SCALE

RSP A24C DATED JUNE 6, 2008 SUPERSEDES STANDARD PLAN A24C DATED MAY 1, 2006 - PAGE 11 OF THE STANDARD PLANS BOOK DATED MAY 2006.

REVISED STANDARD PLAN RSP A24C

2006 REVISED STANDARD PLAN RSP A24C

5-27-08

DIST	COUNTY	ROUTE	POST MILES TOTAL PROJECT	SHEET NO.	TOTAL SHEETS
10	SJ	4,99	R19.5/R20.1, 15.0/18.6	891	1414

REGISTERED CIVIL ENGINEER

November 17, 2006
PLANS APPROVAL DATE

REGISTERED PROFESSIONAL ENGINEER Dallas Forester No. C37765 Exp. 12-31-06 CIVIL STATE OF CALIFORNIA

The State of California or its officers or agents shall not be responsible for the accuracy or completeness of electronic copies of this plan sheet.

To accompany plans dated 3-26-12

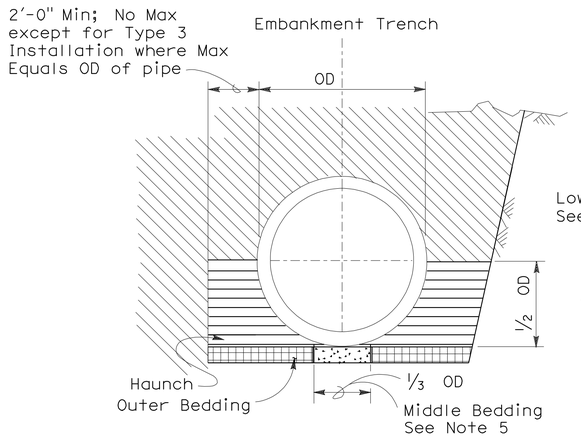

BACKFILL

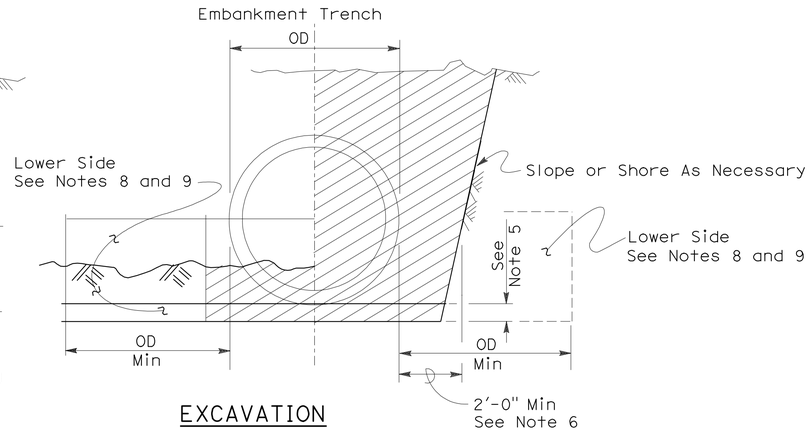

EXCAVATION

Roadway Embankment

Structure Backfill (Culvert) See Note 6

Structure Backfill (Culvert) See Note 6

Loose Backfill

Excavation Structure (Culvert)

TYPE 1 INSTALLATION:

The haunch and outer bedding shall be compacted to a minimum 90 percent relative compaction. In addition, the minimum sand equivalent in these areas shall be 30 and the maximum percentage passing the 75 μm sieve size shall be 12.

TYPE 2 INSTALLATION:

The haunch and outer bedding shall be compacted to a minimum 90 percent relative compaction. In addition, the minimum sand equivalent in these areas shall be 25.

TYPE 3 INSTALLATION:

The haunch and outer bedding shall be compacted to a minimum 85 percent relative compaction. 90 percent relative compaction will be required where the fill over the pipe is less than 4'-0" or 1/2 OD.

NOTES:

1. Unless otherwise shown on the plans or specified in the special provision, the Contractor shall have the option of selecting the class of RCP and the type of installation to be used, provided the height of cover does not exceed the value shown for the RCP selected.
   Example: 24" RCP culvert with maximum cover of 19'-0" the options are:
   a) Class III or stronger with Installation Type 1.
   b) Class III Special or stronger with Installation Type 2.
   c) Class IV Special or stronger with Installation Type 3.
   Cover is defined as the maximum vertical distance from top of the pipe to finished grade within the length of any given culvert.
2. The class of RCP and Installation Type selected shall be the same throughout the length of any given culvert.
3. The "length of any culvert" is defined as the culvert between:
   a) Successive drainage structure (inlets, junction boxes, headwalls, etc.).
   b) A drainage structure and the inlet or outlet end of the culvert.
   c) The inlet and outlet end of the culvert when there are no intervening drainage structures.
4. Oval and arch shaped RCP shall not be used.
5. 1/25 OD Min, not less than 3".
6. Slurry cement backfill may be substituted for backfill in the outer bedding and haunch areas. If slurry is used the outer and middle beddings shall be omitted. Prior to installation the soil under the middle 1/3 of the outside diameter of the pipe shall be softened by scarifying or other means to a minimum depth of 1/25 OD, but not less than 3". Where slurry cement backfill is used clear distance to trench wall may be reduced as set forth in Section 19-3.062 of the Standard Specifications.
7. Backfill shall be placed full width of excavation except where dimensions are shown for backfill width or thickness. Dimensions shown are minimums.
8. Lower side shall be suitable material as determined by the Engineer. Otherwise it shall be considered unsuitable as set forth in Section 19-2.02 of the Standard Specifications. See Note 9.
9. Where the pipe is placed in a trench, if the trench walls are sloped at 5 vertical to 1 horizontal or steeper for at least 90 percent of the trench height or up to not less than 12" from the grading plane, the firmness of the soil in the lower side need not be considered.
10. Non-reinforced precast concrete pipe sizes 3'-0" or smaller may be placed under installation Types 1, 2 or 3.

INSTALLATION TYPE 1

MINIMUM CLASS AND D-LOAD	COVER	
	108" Dia AND SMALLER	OVER 108" Dia
Class II 1000D	14.9'	12.9'
Class III 1350D	15.0' - 20.9'	13.0' - 18.9'
Class III Special 1700D	21.0' - 26.9'	19.0' - 24.9'
Class IV 2000D	27.0' - 31.9'	25.0' - 29.9'
Class IV Special 2500D	32.0' - 40.9'	30.0' - 38.9'
Class V 3000D	41.0' - 49.9'	39.0' - 46.9'
Class V Special 3600D	50.0' - 59.0'	47.0' - 58.0'

INSTALLATION TYPE 2

MINIMUM CLASS AND D-LOAD	COVER
Class II 1000D	9.9'
Class III 1350D	10.0'- 14.9'
Class III Special 1700D	15.0' - 19.9'
Class IV 2000D	20.0' - 24.9'
Class IV Special 2500D	25.0' - 31.9'
Class V 3000D	32.0' - 38.9'
Class V Special 3600D	39.0' - 47.0'

INSTALLATION TYPE 3

MINIMUM CLASS AND D-LOAD	COVER	
	48" Dia AND SMALLER	OVER 48" Dia
Class II 1000D	7.9'	5.9'
Class III 1350D	8.0' - 10.9'	6.0' - 8.9'
Class III Special 1700D	11.0' - 14.9'	9.0' - 12.9'
Class IV 2000D	15.0' - 17.9'	13.0' - 15.9'
Class IV Special 2500D	18.0' - 21.9'	16.0' - 19.9'
Class V 3000D	22.0' - 26.9'	20.0' - 24.9'
Class V Special 3600D	30.0' - 33.0'	25.0' - 31.0'

STATE OF CALIFORNIA
DEPARTMENT OF TRANSPORTATION

EXCAVATION AND BACKFILL CONCRETE PIPE CULVERTS

NO SCALE

RSP A62DA DATED NOVEMBER 17, 2006 SUPERSEDES STANDARD PLAN A62DA DATED MAY 1, 2006 - PAGE 20 OF THE STANDARD PLANS BOOK DATED MAY 2006.

REVISED STANDARD PLAN RSP A62DA

2006 REVISED STANDARD PLAN RSP A62DA

10-26-06

DIST	COUNTY	ROUTE	POST MILES TOTAL PROJECT	SHEET NO.	TOTAL SHEETS
10	SJ	4,99	R19.5/R20.1, 15.0/18.6	892	1414

Randell D. Hiatt
REGISTERED CIVIL ENGINEER

June 6, 2008
PLANS APPROVAL DATE

REGISTERED PROFESSIONAL ENGINEER
Randell D. Hiatt
No. C50200
Exp. 6-30-09
CIVIL
STATE OF CALIFORNIA

The State of California or its officers or agents shall not be responsible for the accuracy or completeness of electronic copies of this plan sheet.

To accompany plans dated 3-26-12

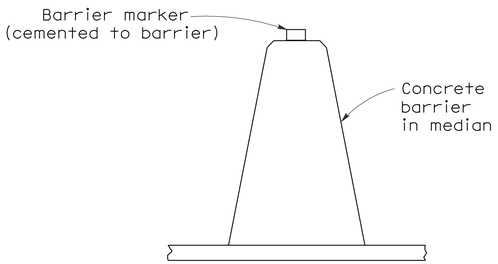

CONCRETE BARRIER TYPE 60 DELINEATION

See Notes 7 and 8

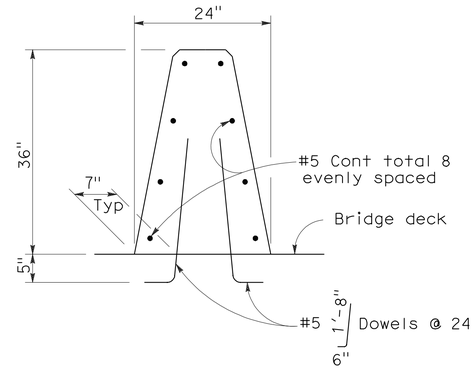

CONCRETE BARRIER TYPE 60A

Details similar to Type 60 except as noted.

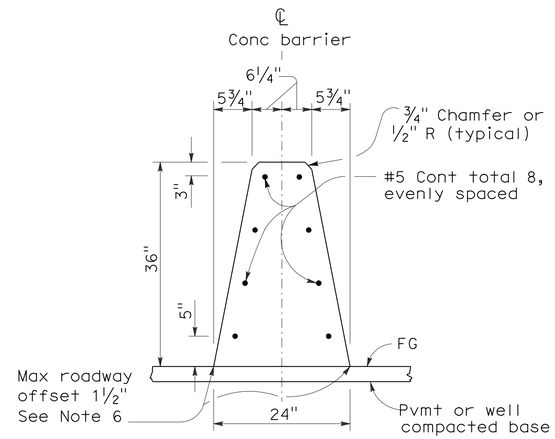

CONCRETE BARRIER TYPE 60

NOTES:

1. See Standard Plan A76B for details of Concrete Barrier Type 60 end anchors, connection to structures and transitions to Concrete Barrier Type 50 and Concrete Barrier Type 60S.
2. See Standard Plan A76C for Concrete Barrier Type 60 transitions at bridge column and sign pedestals.
3. Where glare screen is required on Concrete Barrier Type 60, use Concrete Barrier Type 60G.
4. Where the concrete barrier is added to the face of existing concrete structure, match existing weep holes.
5. Expansion joints in concrete barrier shall be located at all deck, pavement and principal wall joints. Expansion joint filler material shall be the same size as joint or ½" minimum.
6. Where roadway offset is greater than 1½", see Concrete Barrier Type 60C.
7. Barrier delineation to be used when required by the Special Provisions.
8. Spacing of barrier markers to match spacing of raised pavement markers on the adjacent median edgeline pavement delineation.
9. Reinforcing stirrup not required for roadway offsets less than 1'-0".
10. For roadway surfaces offset greater than 1½" to 3", no rebars required. For roadway surfaces offset greater than 3" to 8" use two #4 rebars at 3" above the lower roadway surface. For roadway surfaces offset greater than 8" to 12", use two #4 rebars at 3" above the lower roadway surface and two #4 rebars at 8" above the lower roadway surface. For roadway surfaces offset greater than 12" to 36", use two #4 rebars at 3" above the lower roadway surface and two #4 rebars at every 8" increment vertical spacing above the first two #4 rebars.

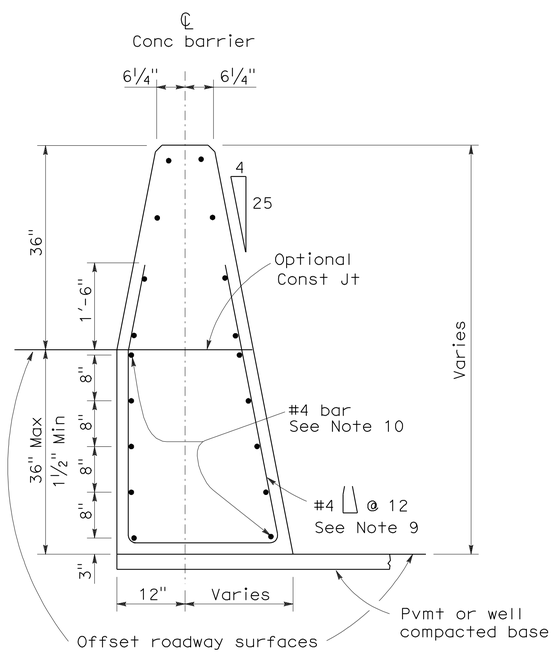

CONCRETE BARRIER TYPE 60C

Details similar to Type 60 except as noted.
Concrete barrier end anchor when necessary.
36" roadway surfaces offset shown.

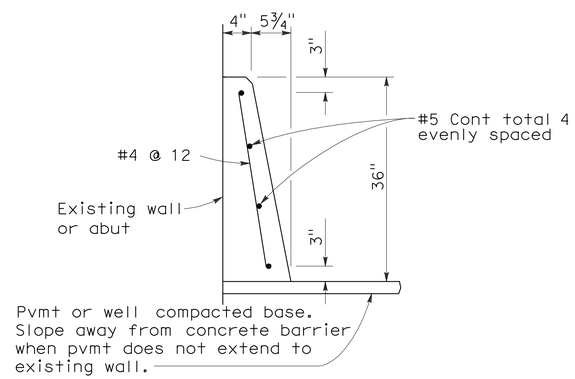

CONCRETE BARRIER TYPE 60D

STATE OF CALIFORNIA
DEPARTMENT OF TRANSPORTATION

CONCRETE BARRIER TYPE 60

NO SCALE

RSP A76A DATED JUNE 6, 2008 SUPERSEDES STANDARD PLAN A76A
DATED MAY 1, 2006 - PAGE 29 OF THE STANDARD PLANS BOOK DATED MAY 2006.

REVISED STANDARD PLAN RSP A76A

2006 REVISED STANDARD PLAN RSP A76A

5-21-08

Dist	COUNTY	ROUTE	POST MILES TOTAL PROJECT	SHEET No.	TOTAL SHEETS
10	SJ	4,99	R19.5/R20.1, 15.0/18.6	893	1414

Randell D. Hiatt
REGISTERED CIVIL ENGINEER

May 20, 2011
PLANS APPROVAL DATE

REGISTERED PROFESSIONAL ENGINEER
Randell D. Hiatt
No. C50200
Exp. 6-30-11
CIVIL
STATE OF CALIFORNIA

The State of California or its officers or agents shall not be responsible for the accuracy or completeness of electronic copies of this plan sheet.

To accompany plans dated 3-26-12

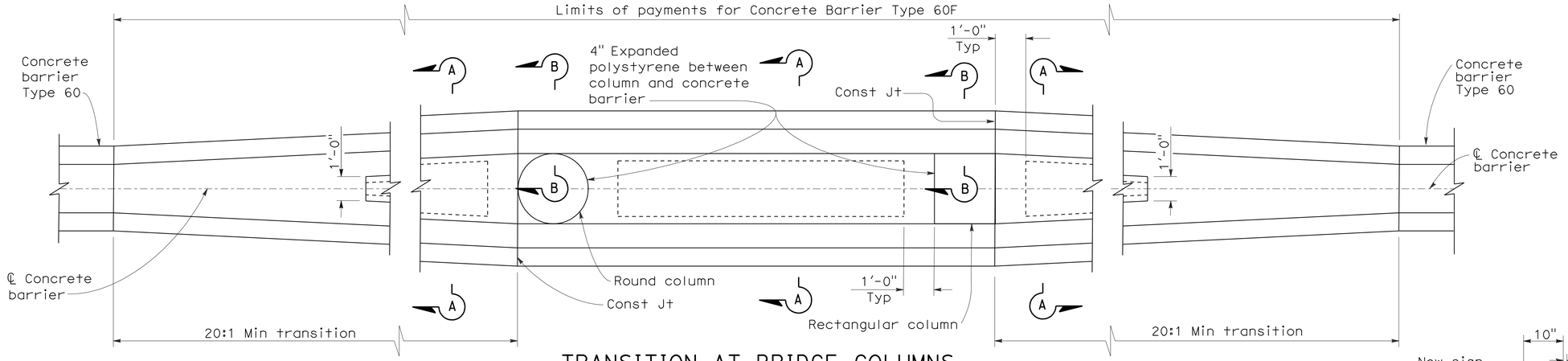

TRANSITION AT BRIDGE COLUMNS

CONCRETE BARRIER TYPE 60F
SEE NOTE 7

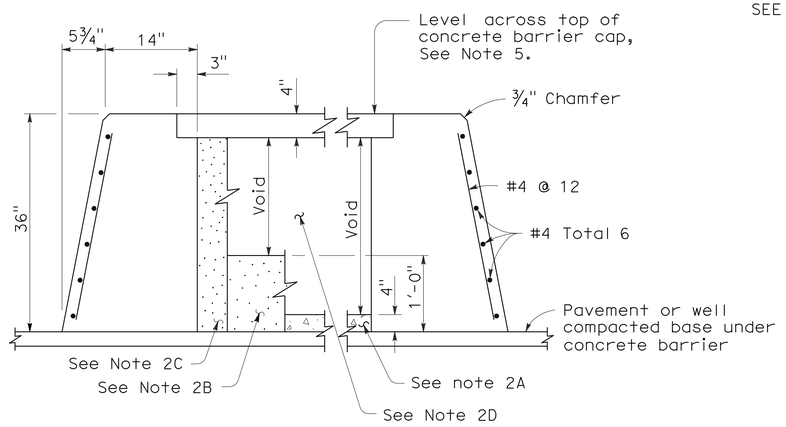

SECTION A-A

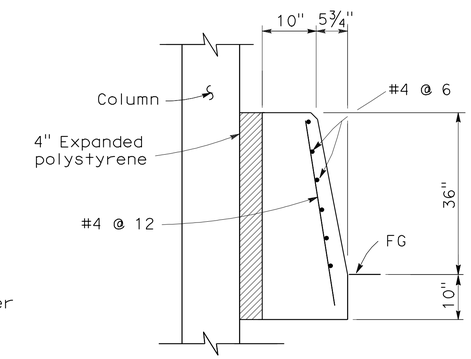

SECTION B-B

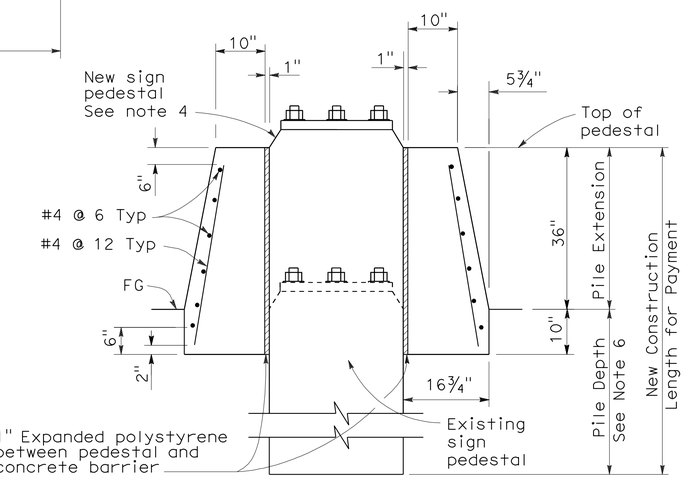

SECTION C-C

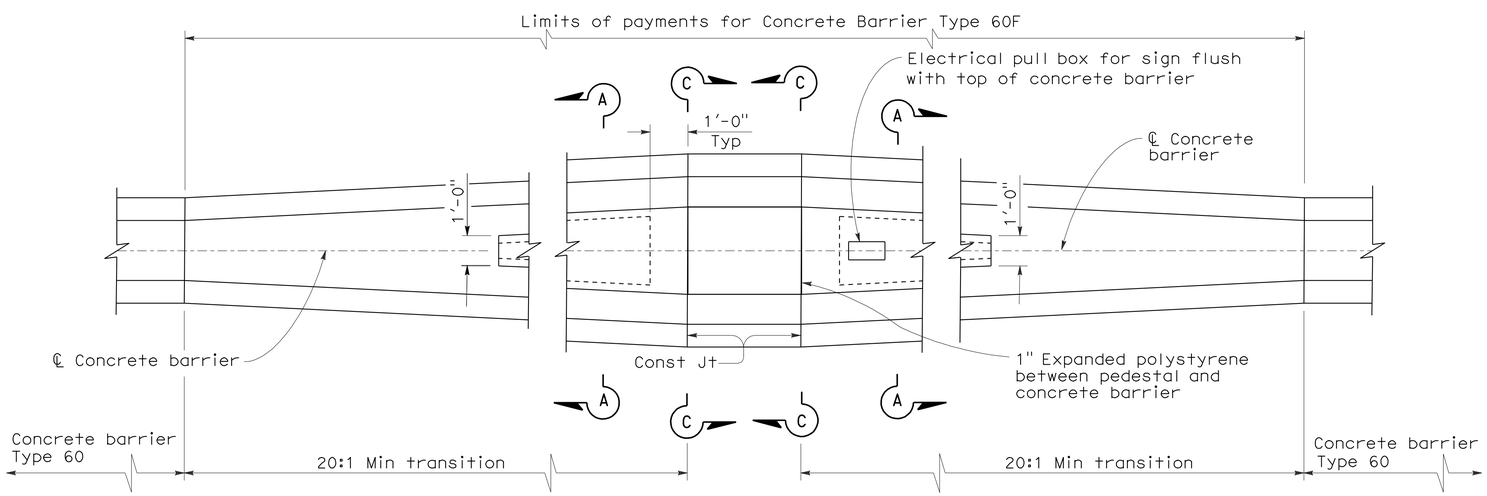

TRANSITION AT SIGN PEDESTAL

CONCRETE BARRIER TYPE 60F
SEE NOTE 7

NOTES:

1. See Revised Standard Plan RSP A76A for Concrete Barrier Type 60.
2. Contractor options for fill between concrete barrier walls:
   A. Place 4" PCC at base between concrete barrier walls.
   B. Place 1'-0" of granular material at base between walls.
   C. Place granular material from base to bottom of 4" cap.
   D. Monolithic concrete with foam blockouts is not permitted.
3. Reinforcing steel shall extend continuous through construction joints.
4. See "Overhead Sign" plans for sign pedestal elevations on new construction.
5. Adjust height of concrete barrier wall on low side of offset or superelevated roadways to provide level grade across top of concrete barrier cap.
6. See Overhead Signs Standard Plan Pile Foundation Tables.
7. All locations with limited shoulder width available for barrier, see Revised Standard Plan RSP A76F for use of Concrete Barrier Type 60GE.

STATE OF CALIFORNIA
DEPARTMENT OF TRANSPORTATION

CONCRETE BARRIER TYPE 60F

NO SCALE

RSP A76C DATED MAY 20, 2011 SUPERSEDES STANDARD PLAN A76C
DATED MAY 1, 2006 - PAGE 31 OF THE STANDARD PLANS BOOK DATED MAY 2006.

REVISED STANDARD PLAN RSP A76C

2006 REVISED STANDARD PLAN RSP A76C

4-6-11

Dist	COUNTY	ROUTE	POST MILES TOTAL PROJECT	SHEET No.	TOTAL SHEETS
10	SJ	4,99	R19.5/R20.1, 15.0/18.6	894	1414

Randell D. Hiatt
REGISTERED CIVIL ENGINEER

May 20, 2011
PLANS APPROVAL DATE

REGISTERED PROFESSIONAL ENGINEER
Randell D. Hiatt
No. C50200
Exp. 6-30-11
CIVIL
STATE OF CALIFORNIA

The State of California or its officers or agents shall not be responsible for the accuracy or completeness of electronic copies of this plan sheet.

To accompany plans dated 3-26-12

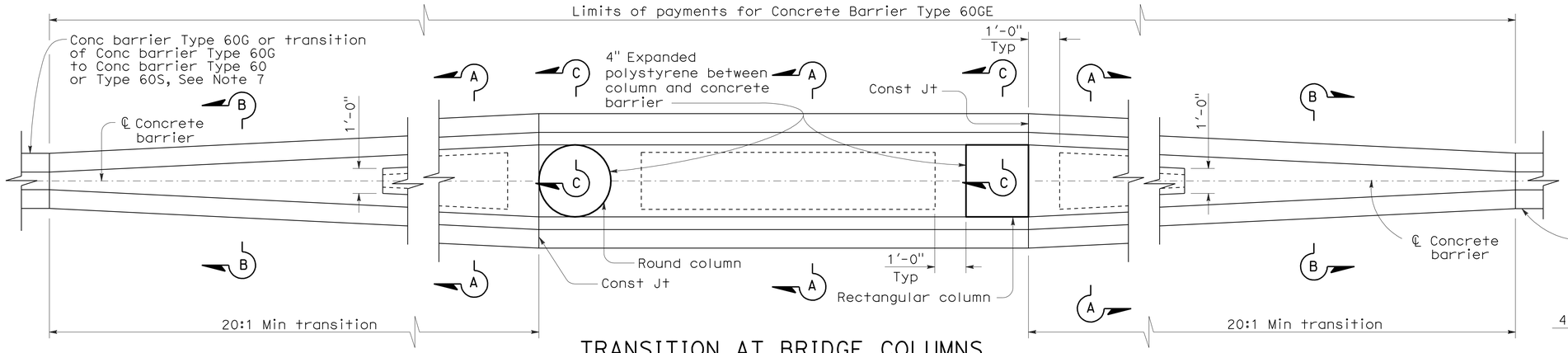

TRANSITION AT BRIDGE COLUMNS

CONCRETE BARRIER TYPE 60GE

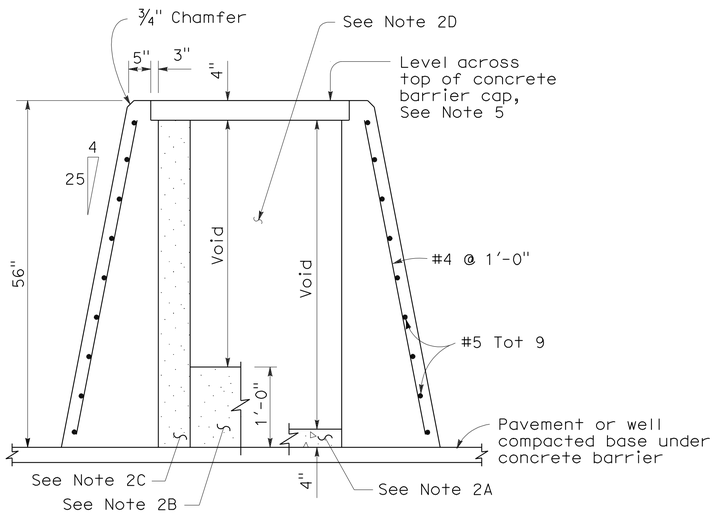

SECTION A-A

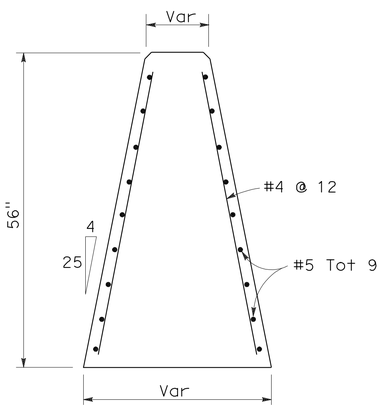

SECTION B-B

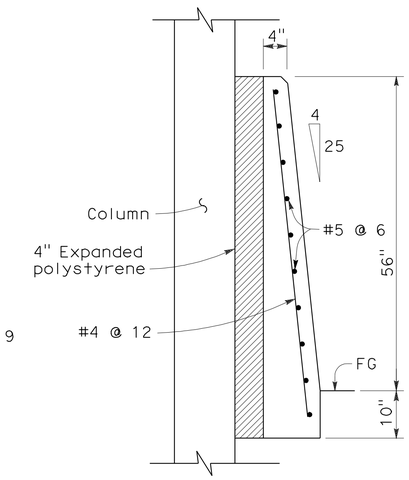

SECTION C-C

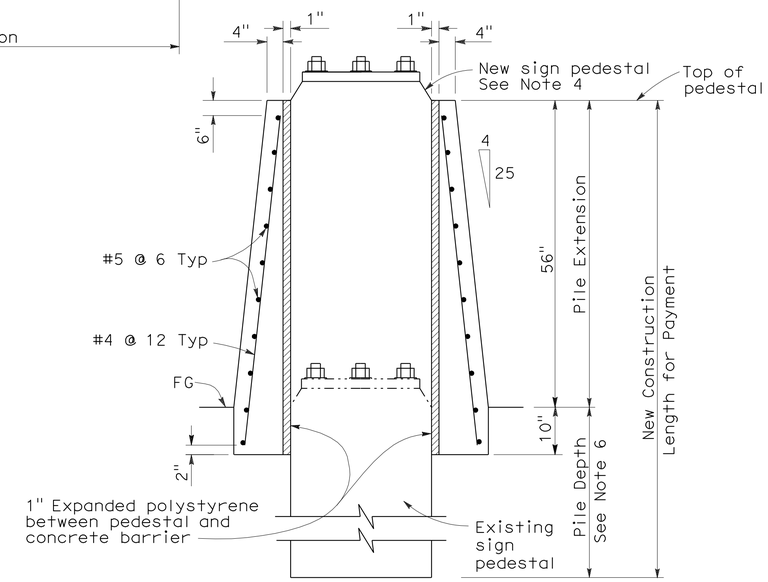

SECTION D-D

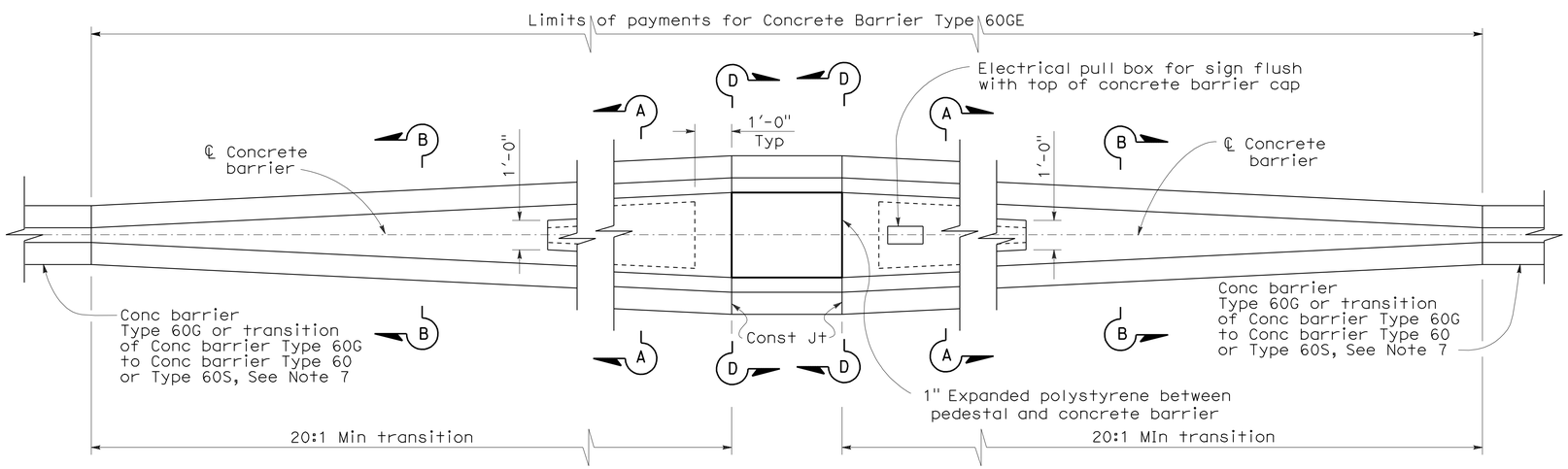

TRANSITION AT SIGN PEDESTAL

CONCRETE BARRIER TYPE 60GE

NOTES:

1. See Standard Plan A76D for Concrete Barrier Type 60G.
2. Contractor options for fill between concrete barrier walls:
   A. Place 4" PCC at base between concrete barrier walls.
   B. Place 1'-0" of granular material at base between walls.
   C. Place granular material from base to bottom of 4" cap.
   D. Monolithic concrete with foam blockouts is not permitted.
3. Reinforcing steel shall extend continuous through construction joints.
4. See "Overhead Sign" plans for sign pedestal elevations on new construction.
5. Adjust height of concrete barrier wall on low side of offset or superelevated roadways to provide level grade across top of concrete barrier cap.
6. See Overhead Signs Standard Plan Pile Foundation Tables.
7. See Revised Standard Plan A76E for concrete barrier transitions.

STATE OF CALIFORNIA
DEPARTMENT OF TRANSPORTATION

CONCRETE BARRIER TYPE 60GE

NO SCALE

RSP A76F DATED MAY 20, 2011 SUPERSEDES STANDARD PLAN A76F
DATED MAY 1, 2006 - PAGE 34 OF THE STANDARD PLANS BOOK DATED MAY 2006.

REVISED STANDARD PLAN RSP A76F

2006 REVISED STANDARD PLAN RSP A76F

4-6-11

Dist	COUNTY	ROUTE	POST MILES TOTAL PROJECT	SHEET No.	TOTAL SHEETS
10	SJ	4,99	R19.5/R20.1, 15.0/18.6	895	1414

Randell D. Hiatt
REGISTERED CIVIL ENGINEER

May 20, 2011
PLANS APPROVAL DATE

REGISTERED PROFESSIONAL ENGINEER
Randell D. Hiatt
No. C50200
Exp. 6-30-11
CIVIL
STATE OF CALIFORNIA

The State of California or its officers or agents shall not be responsible for the accuracy or completeness of electronic copies of this plan sheet.

To accompany plans dated 3-26-12

2006 REVISED STANDARD PLAN RSP A77A1

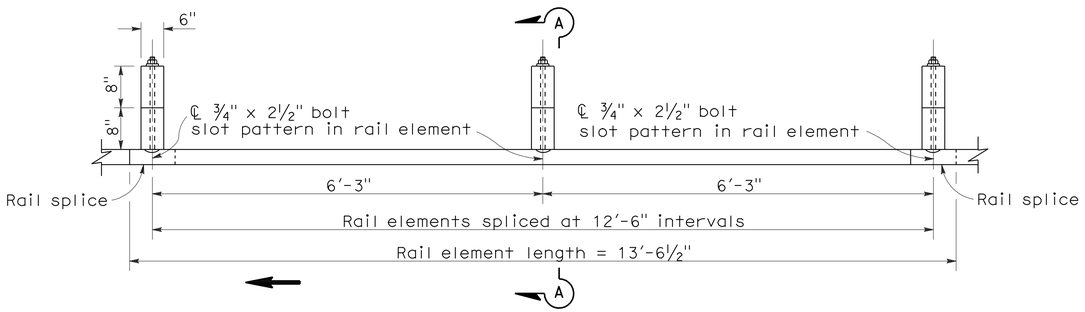

PLAN

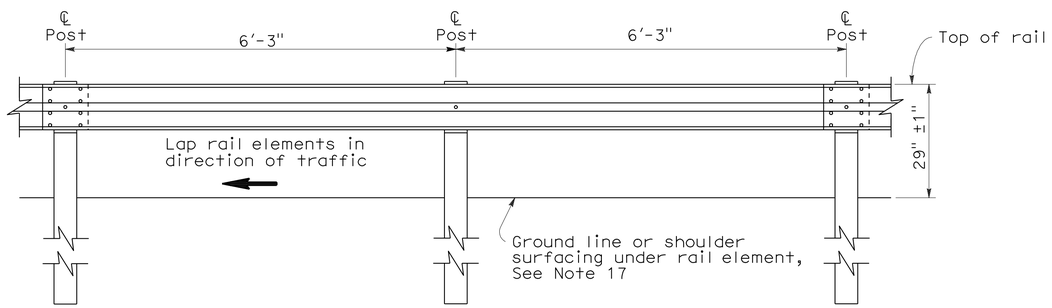

ELEVATION

METAL BEAM GUARD RAILING WITH WOOD POST AND BLOCKS

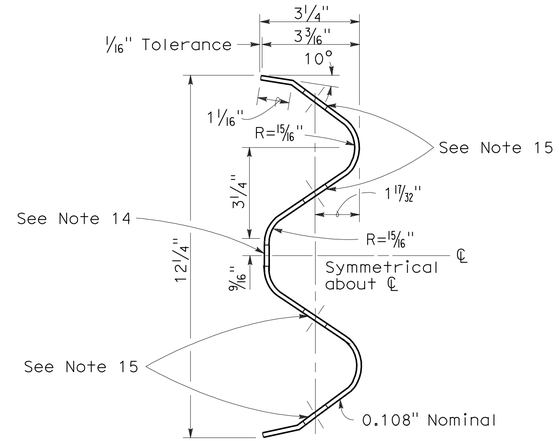

SECTION THRU RAIL ELEMENT

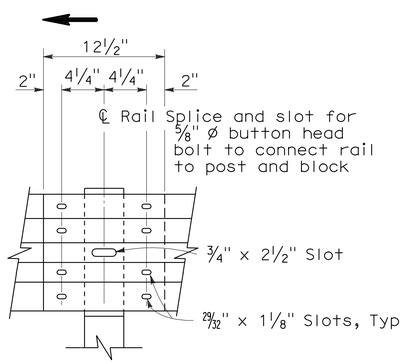

ELEVATION

RAIL ELEMENT SPLICE DETAIL

a) Connect the over lapped end of the rail elements with ⅝" ø x 1⅜" button head oval shoulder splice bolts inserted into the 29⁄32" x 1⅛" slots and bolted together with ⅝" ø recessed hex nuts. Recess of hex nut points toward rail element. A total of 8 bolts and nuts are to be used at each rail splice connection.

b) The ends of the rail elements are to be overlapped in the direction of traffic (see details).

c) Where end cap is to be attached to the end of a rail element, a total of 4 of the above described splice bolts and nuts are to be used.

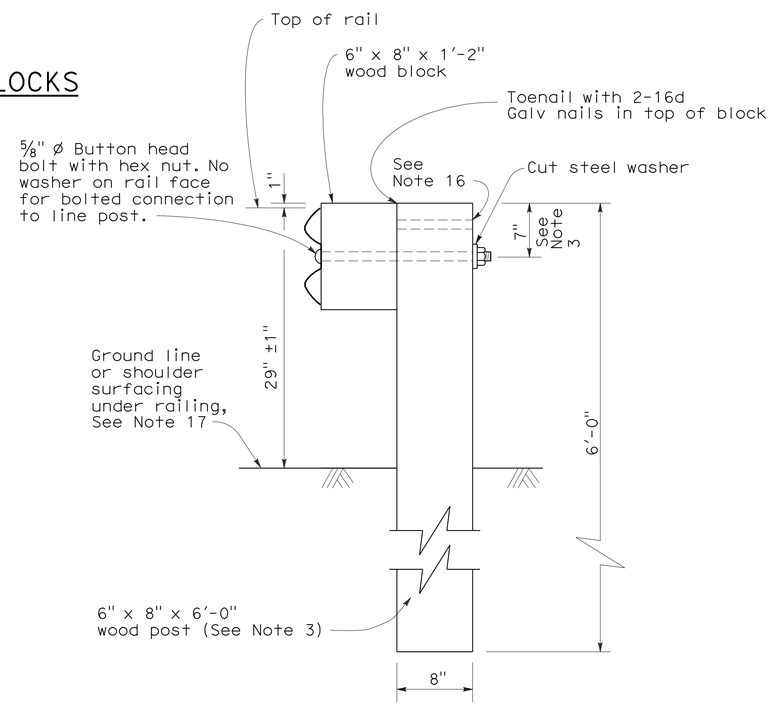

SECTION A-A

TYPICAL WOOD LINE POST INSTALLATION

See Note 4

NOTES:

1. For details of steel post installations, see Standard Plan A77A2.
2. For details of standard hardware used to construct guard railing, see Standard Plan A77B1.
3. For details of wood posts and wood blocks used to construct guard railing, see Standard Plan A77C1.
4. For additional installation details, see Standard Plan A77C3.
5. Guard railing post spacing to be 6'-3" center to center, except as otherwise noted.
6. For guard railing typical layouts, see the A77E, A77F and A77G Series of Standard Plans.
7. For terminal system end treatment details, see the A77L Series of Standard Plans. To connect railing to terminal system end treatment, transition the top of railing height at a ratio of 120:1 to terminal system end treatment height plus one 12'-6" standard railing section at the transitioned height for a horizontal connection to the end treatment.
8. For guard railing end anchor details, see Standard Plans A77H1 and A77I2.
9. For details of guard railing transition to bridge railing, see Standard Plan A77J4.
10. For additional details of guard railing connection to bridge railings, see Standard Plans A77J1, A77J2 and A77K1.
11. For guard railing connection details to abutments and walls, see Standard Plan A77J3.
12. Direction of adjacent traffic indicated by ➡.
13. For typical guard railing delineation and dike positioning details, see Standard Plan A77C4.
14. Slotted hole for bolted connection of rail element to block and post. See "Section Thru Rail Element".
15. Slotted holes for splice bolts to overlap ends of rail element. See "Section Thru Rail Element".
16. Additional hole in uppermost portion of line post is for potential future adjustments of railing height. See Standard Plan A77C1.
17. Install posts in soil.

STATE OF CALIFORNIA
DEPARTMENT OF TRANSPORTATION

METAL BEAM GUARD RAILING STANDARD RAILING SECTION (WOOD POST WITH WOOD BLOCK)

NO SCALE

RSP A77A1 DATED MAY 20, 2011 SUPERSEDES STANDARD PLAN A77A1 DATED MAY 1, 2006 - PAGE 41 OF THE STANDARD PLANS BOOK DATED MAY 2006.

REVISED STANDARD PLAN RSP A77A1

3-10-11

Dist	COUNTY	ROUTE	POST MILES TOTAL PROJECT	SHEET No.	TOTAL SHEETS
10	SJ	4,99	R19.5/R20.1, 15.0/18.6	896	1414

Randell D. Hiatt
REGISTERED CIVIL ENGINEER

May 20, 2011
PLANS APPROVAL DATE

REGISTERED PROFESSIONAL ENGINEER
Randell D. Hiatt
No. C50200
Exp. 6-30-11
CIVIL
STATE OF CALIFORNIA

The State of California or its officers or agents shall not be responsible for the accuracy or completeness of electronic copies of this plan sheet.

To accompany plans dated 3-26-12

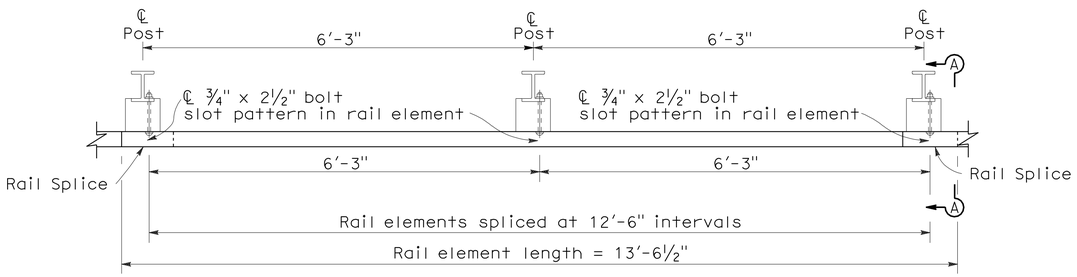

PLAN

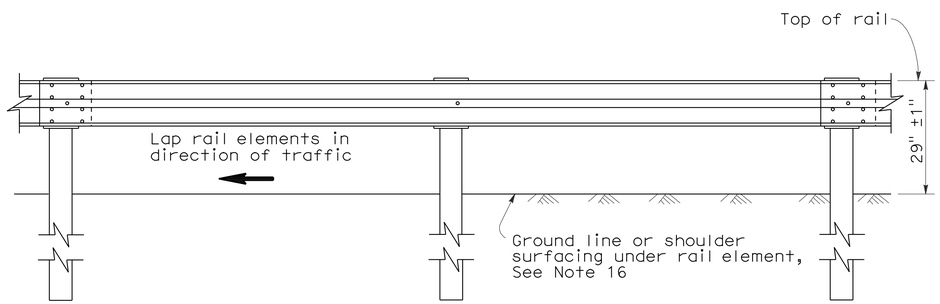

ELEVATION

METAL BEAM GUARD RAILING WITH STEEL POSTS AND NOTCHED WOOD OR NOTCHED RECYCLED PLASTIC BLOCKS

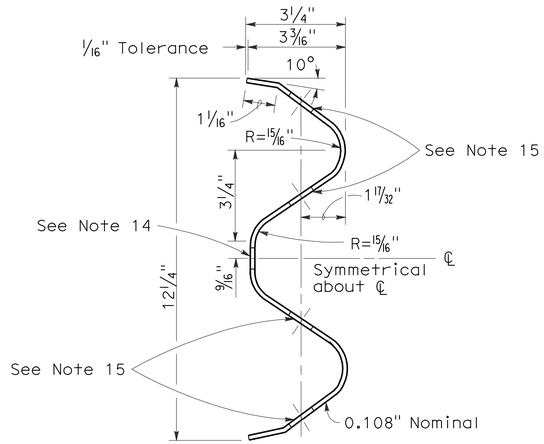

SECTION THRU RAIL ELEMENT

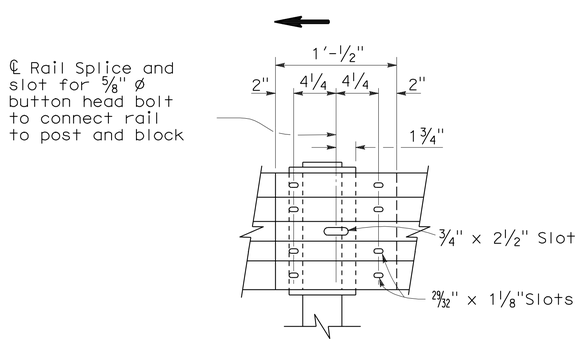

ELEVATION

RAIL ELEMENT SPLICE DETAIL

a) Connect the over lapped end of the rail elements with ⅝" ø x 1⅜" button head oval shoulder splice bolts inserted into the 29⁄₃₂" x 1⅛" slots and bolted together with ⅝" ø recessed hex nuts. Recess of hex nut points toward rail element. A total of 8 bolts and nuts are to be used at each rail splice connection.

b) The ends of the rail elements are to be overlapped in the direction of traffic (see details).

c) Where end cap is to be attached to the end of a rail element, a total of 4 of the above described splice bolts and nuts are to be used.

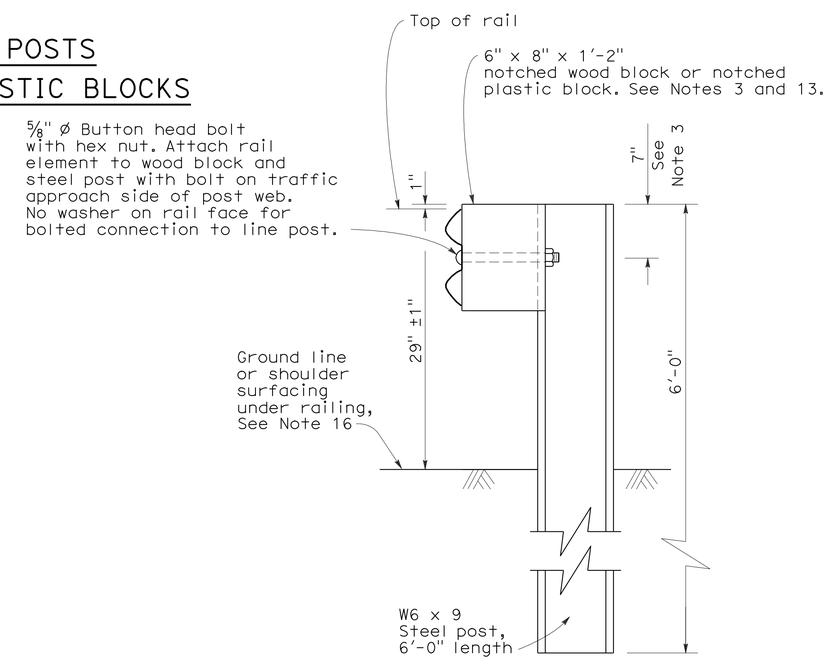

SECTION A-A

TYPICAL STEEL LINE POST INSTALLATION

See Note 4

NOTES:

1. For details of wood post installations, see Standard Plan A77A1.
2. For details of standard hardware used to construct guard railing, see Standard Plan A77B1.
3. For details of steel posts and notched wood blocks used to construct guard railing, see Standard Plan A77C2.
4. For additional installation details, see Standard Plan A77C3.
5. Guard railing post spacing to be 6'-3" center to center, except as otherwise noted.
6. For guard railing typical layouts, see the A77E, A77F and A77G Series of Standard Plans.
7. For terminal system end treatment details, see the A77L Series of Standard Plans. To connect railing to terminal system end treatment, transition the top of railing height at a ratio of 120:1 to terminal system end treatment height plus one 12'-6" standard railing section at the transitioned height for a horizontal connection to the end treatment.
8. For guard railing end anchor details, see Standard Plans A77H1 and A77I2.
9. For details of guard railing transition to bridge railing, see Standard Plan A77J4.
10. For additional details of guard railing connection to bridge railings, see Standard Plans A77J1, A77J2 and A77K1.
11. For dike positioning and guard railing delineation details, see Standard Plan A77C4.
12. Direction of adjacent traffic indicated by → .
13. Notched face of block faces steel post.
14. Slotted hole for bolted connection of rail element to block and post. See "Section Thru Rail Element".
15. Slotted holes for splice bolts to overlap ends of rail element. See "Section Thru Rail Element".
16. Install posts in soil.

STATE OF CALIFORNIA
DEPARTMENT OF TRANSPORTATION

METAL BEAM GUARD RAILING STANDARD RAILING SECTION (STEEL POST WITH NOTCHED WOOD OR NOTCHED RECYCLED PLASTIC BLOCK)

NO SCALE

RSP A77A2 DATED MAY 20, 2011 SUPERSEDES STANDARD PLAN A77A2 DATED MAY 1, 2006 - PAGE 42 OF THE STANDARD PLANS BOOK DATED MAY 2006.

REVISED STANDARD PLAN RSP A77A2

2006 REVISED STANDARD PLAN RSP A77A2

5-4-11

To accompany plans dated 3-26-12

Dist	COUNTY	ROUTE	POST MILES TOTAL PROJECT	SHEET No.	TOTAL SHEETS
10	SJ	4,99	R19.5/R20.1, 15.0/18.6	897	1414

Randell D. Hiatt
REGISTERED CIVIL ENGINEER

May 20, 2011
PLANS APPROVAL DATE

REGISTERED PROFESSIONAL ENGINEER
Randell D. Hiatt
No. C50200
Exp. 6-30-11
CIVIL
STATE OF CALIFORNIA

The State of California or its officers or agents shall not be responsible for the accuracy or completeness of electronic copies of this plan sheet.

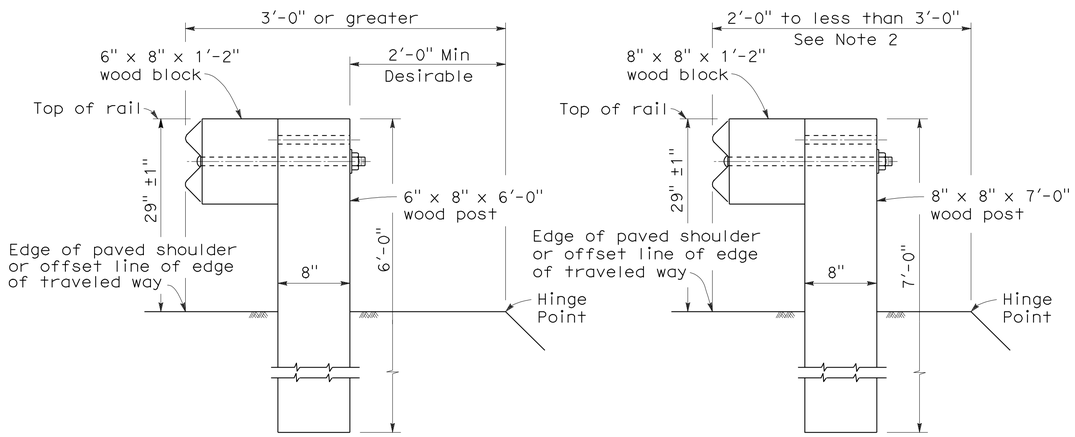

DETAIL A
TYPICAL ROADWAY INSTALLATION
See Note 1

DETAIL B
NARROW ROADWAY INSTALLATION
See Note 1

POST EMBEDMENT

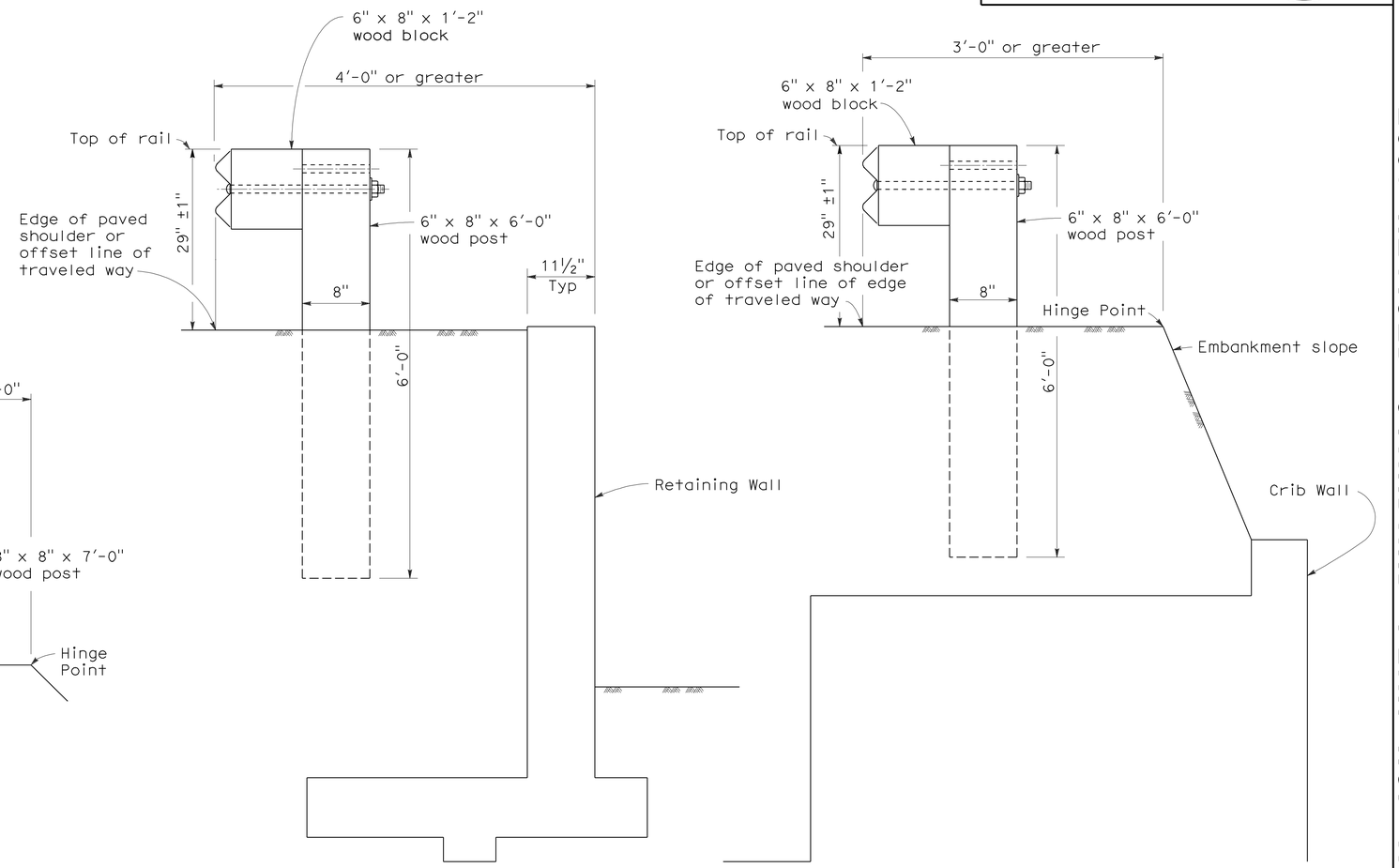

DETAIL C

DETAIL D

INSTALLATION AT EARTH RETAINING WALLS

NOTES:

1. These installation details also applicable to steel line post installations. For Detail A, C, and D, where steel line post installations are constructed, W6 x 9 steel post, 6'-0" in length, with 6" x 8" x 1'-2" notched wood blocks or notched recycled plastic blocks are to be used in place of the size of wood post and wood block shown. For Detail B, where steel line post installations are constructed, W6 x 9 steel post, 7'-0" in length, with 6" x 8" x 1'-2" notched wood blocks or notched recycled plastic blocks are to be used in place of the size of wood post and wood block shown. For additional installation details, see Standard Plans A77A1 and A77A2.
2. Where the distance between the face of the rail and the hinge point is less than 2'-0", see the Project Plans for special details.
3. For dike positioning with guard railing installations, see Standard Plan A77C4.

STATE OF CALIFORNIA
DEPARTMENT OF TRANSPORTATION

METAL BEAM GUARD RAILING TYPICAL LINE POST EMBEDMENT AND HINGE POINT OFFSET DETAILS

NO SCALE

RSP A77C3 DATED MAY 20, 2011 SUPERSEDES STANDARD PLAN A77C3
DATED MAY 1, 2006 - PAGE 46 OF THE STANDARD PLANS BOOK DATED MAY 2006.

REVISED STANDARD PLAN RSP A77C3

2006 REVISED STANDARD PLAN RSP A77C3

3-10-11

Dist	COUNTY	ROUTE	POST MILES TOTAL PROJECT	SHEET No.	TOTAL SHEETS
10	SJ	4,99	R19.5/R20.1, 15.0/18.6	898	1414

Randell D. Hiatt
REGISTERED CIVIL ENGINEER

May 20, 2011
PLANS APPROVAL DATE

REGISTERED PROFESSIONAL ENGINEER
Randell D. Hiatt
No. C50200
Exp. 6-30-11
CIVIL
STATE OF CALIFORNIA

The State of California or its officers or agents shall not be responsible for the accuracy or completeness of electronic copies of this plan sheet.

To accompany plans dated 3-26-12

NOTES:

1. When necessary to place dike in front of face of guard railing, only Type C dike may be used. For dike details, see Standard Plan A87B.
2. For standard railing post embedment, see Standard Plans A77C3.
3. Guard railing delineation to be used where shown on the Project Plans.
4. When dike or curb is placed under guard railing, the maximum height of the dike or curb shall be 4". Mountable dike should not be used. For dike and curb details, see Standard Plans A87A and A87B.
5. For details of typical distance between the face of rail and hinge point, see Standard Plan A77C3.
6. For steel line posts, use 1/4 - 20 self-tapping screws in 0.22" diameter holes or 1/4" bolts in 9/32" diameter holes.

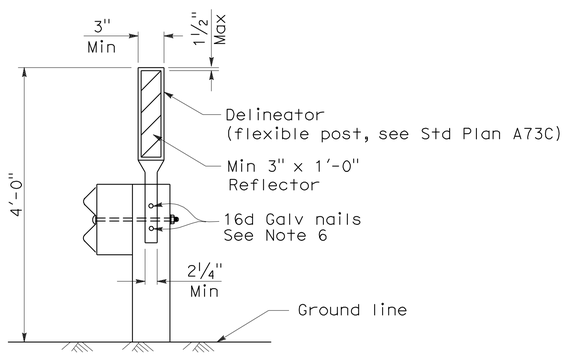

GUARD RAILING DELINEATION

See Note 3

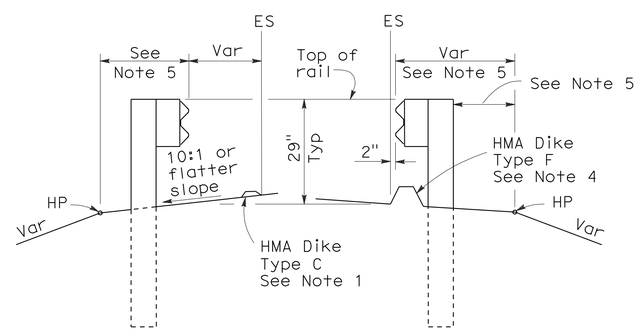

DIKE POSITIONING

See Note 1

STATE OF CALIFORNIA
DEPARTMENT OF TRANSPORTATION

METAL BEAM GUARD RAILING TYPICAL RAILING DELINEATION AND DIKE POSITIONING DETAILS

NO SCALE

RSP A77C4 DATED MAY 20, 2011 SUPERSEDES RSP A77C4 DATED JUNE 6, 2008 AND STANDARD PLAN A77C4 DATED MAY 1, 2006 - PAGE 47 OF THE STANDARD PLANS BOOK DATED MAY 2006.

REVISED STANDARD PLAN RSP A77C4

2006 REVISED STANDARD PLAN RSP A77C4

3-10-11

DIST	COUNTY	ROUTE	POST MILES TOTAL PROJECT	SHEET NO.	TOTAL SHEETS
10	SJ	4,99	R19.5/R20.1, 15.0/18.6	899	1414

Randell D. Hiatt
REGISTERED CIVIL ENGINEER

June 6, 2008
PLANS APPROVAL DATE

REGISTERED PROFESSIONAL ENGINEER
Randell D. Hiatt
No. C50200
Exp. 6-30-09
CIVIL
STATE OF CALIFORNIA

The State of California or its officers or agents shall not be responsible for the accuracy or completeness of electronic copies of this plan sheet.

To accompany plans dated 3-26-12

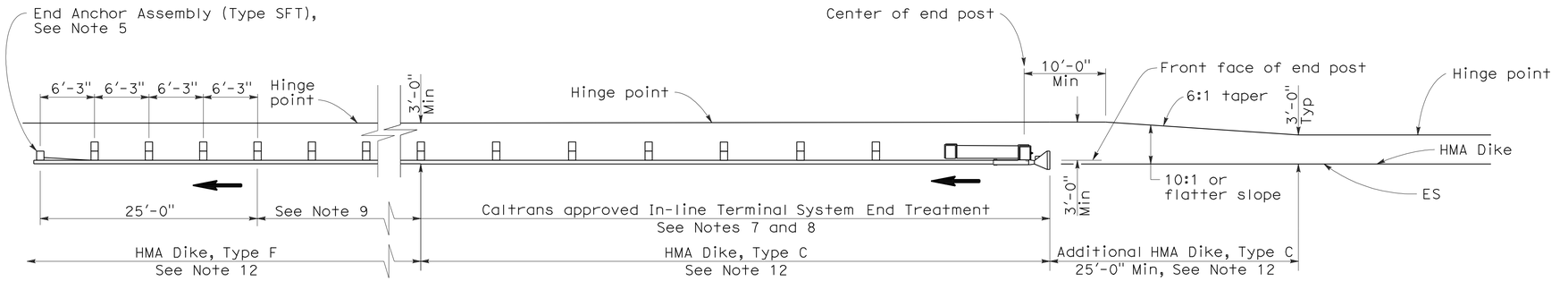

TYPE 11A LAYOUT

(EMBANKMENT GUARD INSTALLATION WITH IN-LINE END TREATMENT AT TRAFFIC APPROACH END OF RAILING)
See Note 6

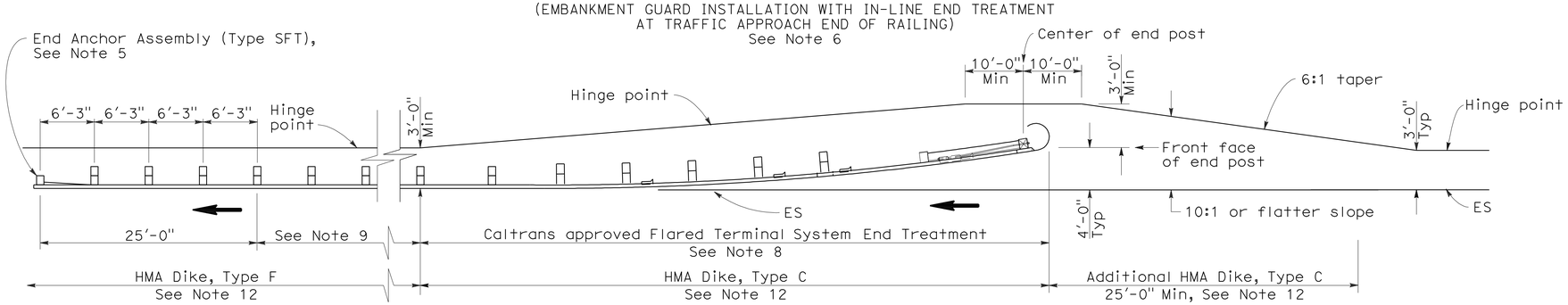

TYPE 11B LAYOUT

(EMBANKMENT GUARD RAILING INSTALLATION WITH FLARED END TREATMENT AT TRAFFIC APPROACH END OF RAILING)
See Note 6

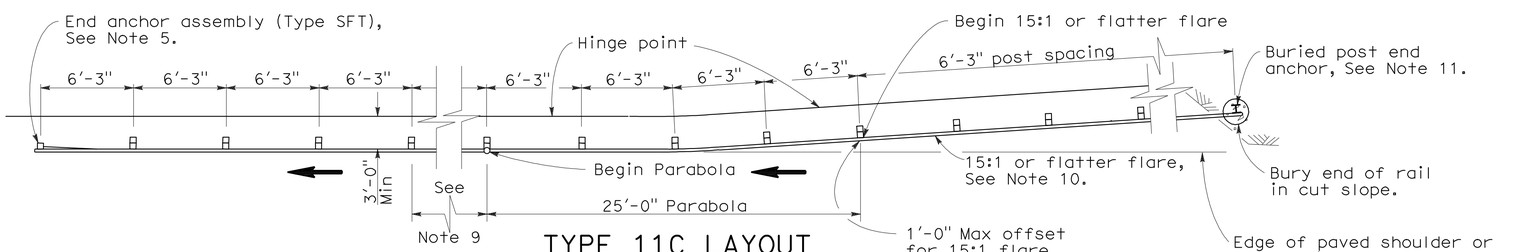

TYPE 11C LAYOUT

(EMBANKMENT GUARD RAILING INSTALLATION WITH BURIED END ANCHOR TREATMENT AT TRAFFIC APPROACH END OF RAILING)
See Notes 6 and 12

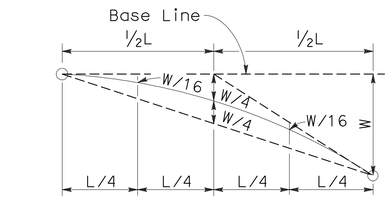

TYPICAL PARABOLIC LAYOUT

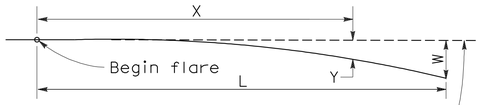

Base Line (Edge of paved shoulder or offset line of edge of traveled way)

$$Y = \frac{WX^2}{L^2}$$

Y = Offset from base line
W = Maximum offset
X = Distance along base line
L = Length of flare

PARABOLIC FLARE OFFSETS

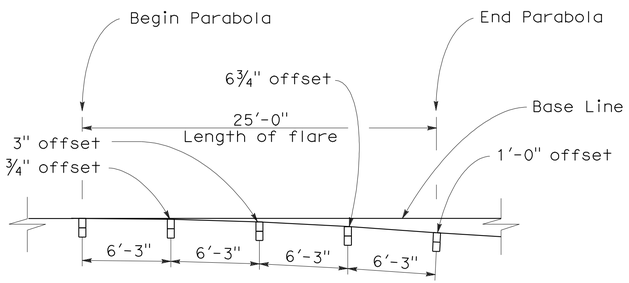

TYPICAL FLARE OFFSETS FOR 1 FOOT MAX END OFFSET

NOTES:

1. Line post, blocks and hardware to be used are shown on Standard Plans A77A1, A77A2, A77B1, A77C1, and A77C2.
2. Guard rail post spacing to be 6'-3" center to center, except as otherwise noted.
3. Except as noted, line posts are 6" x 8" x 6'-0" wood with 6" x 8" x 1'-2" wood blocks. W6 x 9 steel posts, 6'-0" in length, with 6" x 8" x 1'-2" notched wood blocks or recycled plastic blocks may be used for 6" x 8" x 6'-0" wood post with 6" x 8" x 1'-2" wood blocks where applicable and when specified.
4. Direction of adjacent traffic indicated by ⟶.
5. For End Anchor Assembly (Type SFT) details, see Standard Plan A77H1.
6. Layout Types 11A, 11B or 11C are typically used where guard railing is recommended to shield embankment slopes and a crashworthy end treatment is required for only one direction of traffic.
7. In-line Terminal System End Treatments are used where site conditions will not accommodate a flared end treatment.
8. The type of terminal system end treatment to be used will be shown on the Project Plans.
9. Dependent on site conditions (embankment height and side slope), construction of additional guard railing (length equal to multiples of 12'-6" with 6'-3" post spacing) may be advisable.
10. The 15:1 or flatter flare used with buried end anchors is based on the edge of the paved shoulder or offset line of edge of the traveled way. The length of guard railing within the 15:1 or flatter flare is based on site conditions and should be a length equal to multiples of 12'-6".
11. For details of the buried post end anchor used with Type 11C Layout, see Standard Plan A77I2.
12. Where placement of dike is required with guard railing installations, see Revised Standard Plan RSP A77C4 for dike positioning details.

STATE OF CALIFORNIA
DEPARTMENT OF TRANSPORTATION

METAL BEAM GUARD RAILING TYPICAL LAYOUTS FOR EMBANKMENTS

NO SCALE

RSP A77E1 DATED JUNE 6, 2008 SUPERSEDES STANDARD PLAN A77E1
DATED MAY 1, 2006 - PAGE 48 OF THE STANDARD PLANS BOOK DATED MAY 2006.

REVISED STANDARD PLAN RSP A77E1

2006 REVISED STANDARD PLAN RSP A77E1

12-10-07

DIST	COUNTY	ROUTE	POST MILES TOTAL PROJECT	SHEET NO.	TOTAL SHEETS
10	SJ	4,99	R19.5/R20.1, 15.0/18.6	900	1414

Randell D. Hiatt
REGISTERED CIVIL ENGINEER

June 6, 2008
PLANS APPROVAL DATE

REGISTERED PROFESSIONAL ENGINEER
Randell D. Hiatt
No. C50200
Exp. 6-30-09
CIVIL
STATE OF CALIFORNIA

The State of California or its officers or agents shall not be responsible for the accuracy or completeness of electronic copies of this plan sheet.

To accompany plans dated 3-26-12

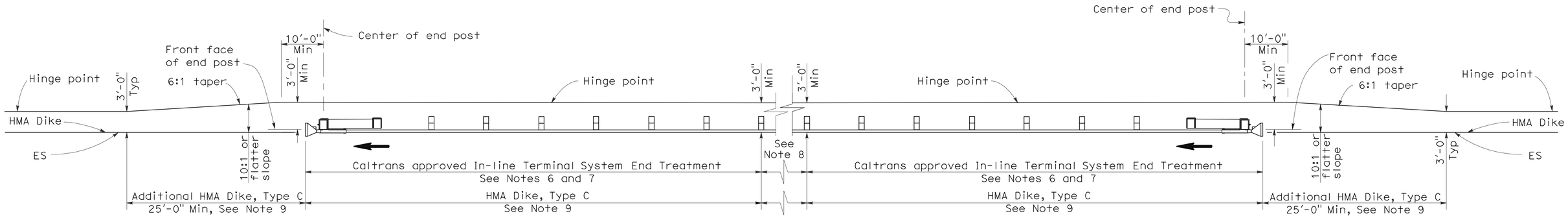

TYPE 11D LAYOUT

(EMBANKMENT GUARD RAILING INSTALLATION WITH IN-LINE END TREATMENT AT EACH END OF RAILING)
See Note 5

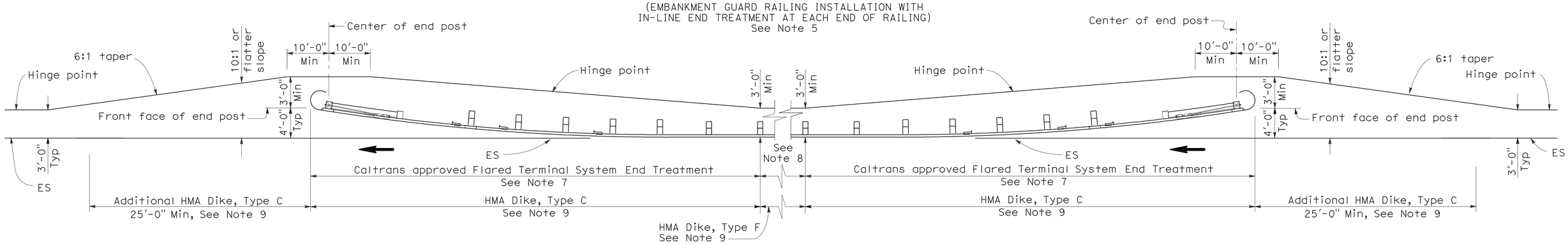

TYPE 11E LAYOUT

(EMBANKMENT GUARD RAILING INSTALLATION WITH FLARED END TREATMENT AT EACH END OF RAILING)
See Note 5

NOTES:

1. Line post, blocks and hardware to be used are shown on Standard Plans A77A1, A77A2, A77B1, A77C1 and A77C2.
2. Guard rail post spacing to be 6'-3" center to center, except as otherwise noted.
3. Except as noted, line posts are 6" x 8" x 6'-0" wood with 6" x 8" x 1'-2" wood blocks. W6 x 9 steel posts, 6'-0" in length, with 6" x 8" x 1'-2" notched wood blocks or plastic blocks may be used for 6" x 8" x 6'-0" wood post with 6" x 8" x 1'-2" wood blocks where applicable and when specified.
4. Direction of adjacent traffic indicated by ➡.
5. Layout Types 11D through 11L, shown on the A77E Series of Revised Standard Plans, are typically used where guard railing is recommended to shield embankment slopes and a crashworthy end treatment is required for both directions of traffic.
6. In-line Terminal System End Treatments are used where site conditions will not accommodate a flared end treatment.
7. The type of terminal system end treatment to be used will be shown on the Project Plans.
8. Dependent on site conditions (embankment height and side slope), construction of additional guard railing (length equal to multiples of 12'-6" with 6'-3" post spacing) may be advisable.
9. Where placement of dike is required with guard railing installations, see Revised Standard Plan RSP A77C4 for dike positioning details.

STATE OF CALIFORNIA
DEPARTMENT OF TRANSPORTATION

METAL BEAM GUARD RAILING TYPICAL LAYOUTS FOR EMBANKMENTS

NO SCALE

RSP A77E2 DATED JUNE 6, 2008 SUPERSEDES STANDARD PLAN A77E2
DATED MAY 1, 2006 - PAGE 49 OF THE STANDARD PLANS BOOK DATED MAY 2006.

REVISED STANDARD PLAN RSP A77E2

2006 REVISED STANDARD PLAN RSP A77E2

12-10-07