Dist	COUNTY	ROUTE	POST MILES TOTAL PROJECT	SHEET No.	TOTAL SHEETS

REGISTERED CIVIL ENGINEER

July 15, 2016

PLANS APPROVAL DATE

REGISTERED PROFESSIONAL ENGINEER Stanley P. Johnson No. C57793 Exp. 3-31-18 CIVIL STATE OF CALIFORNIA

THE STATE OF CALIFORNIA OR ITS OFFICERS OR AGENTS SHALL NOT BE RESPONSIBLE FOR THE ACCURACY OR COMPLETENESS OF SCANNED COPIES OF THIS PLAN SHEET.

TO ACCOMPANY PLANS DATED _____

NOTE:

Handhole shall be located on the downstream side of traffic.

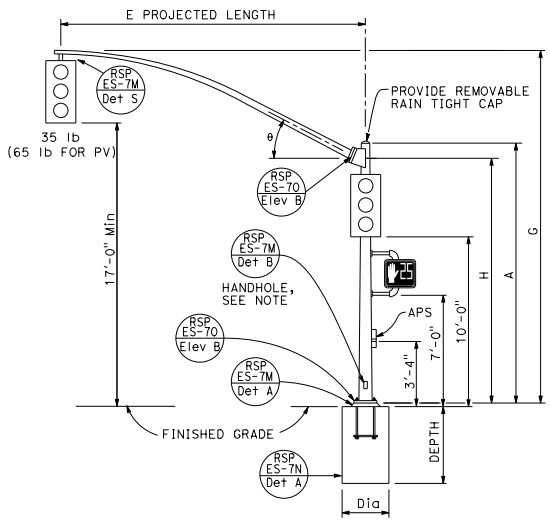

TYPE 16-1-100, 18-1-100

ELEVATION A

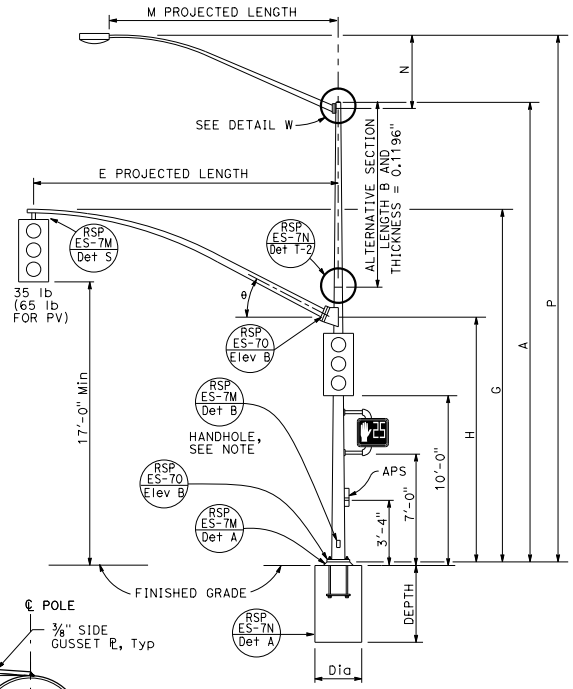

TYPE 19-1-100, 19A-1-100

ELEVATION B

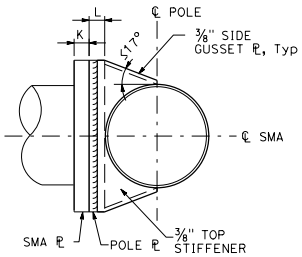

SECTION B-B

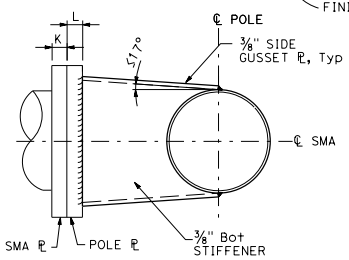

SECTION C-C

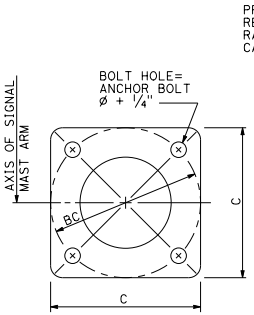

DETAIL D

BASE PLATE

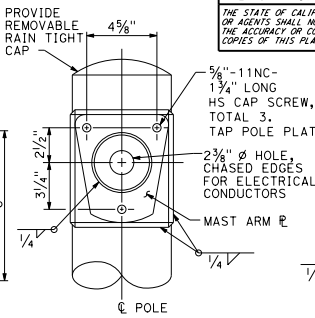

DETAIL W-1

LUMINAIRE MAST ARM CONNECTION

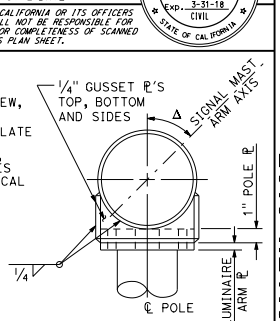

DETAIL W-2

DETAIL W

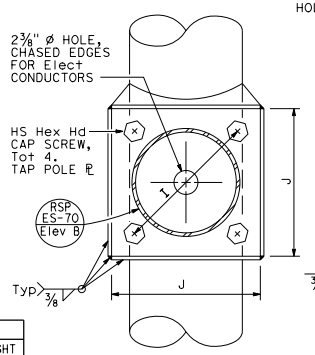

SECTION A-A

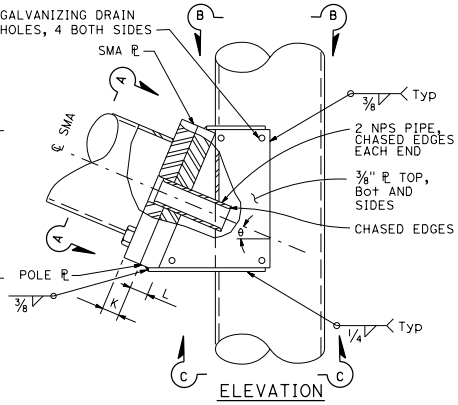

ELEVATION

SIGNAL MAST ARM CONNECTION

DETAIL A

SIGNAL MAST ARM DATA										
E PROJECTED LENGTH	G MOUNTING HEIGHT	H	Min OD AT POLE	THICKNESS	I BOLT CIRCLE	HS CAP SCREWS	J PLATE SIZE	K MAST ARM ℙ THICKNESS	L POLE ℙ THICKNESS	θ
15'-0"	21'-8"±	17'-6"	7⅜"	0.1793"	12"	1¼"-7NC-3"	1'-0"	1¼"	1½"	23°
20'-0"			8"				1'-1"			
25'-0"	22'-8"±	16'-0"	9"							
30'-0"	23'-0"±		10"							

LUMINAIRE MAST ARM DATA					
M PROJECTED LENGTH	N RISE	Min OD AT POLE	THICKNESS	P MOUNTING HEIGHT 30'-0" POLE	P MOUNTING HEIGHT 35'-0" POLE
6'-0"	2'-0"±	3¼"	0.1196"	31'-6"±	36'-6"±
8'-0"	2'-6"±	3½"		32'-0"±	37'-0"±
10'-0"	3'-3"±	3⅞"		32'-9"±	37'-9"±
12'-0"	4'-3"±			33'-9"±	38'-9"±
15'-0"	4'-9"±	4¼"		34'-3"±	39'-3"±

POLE TYPE	LOAD CASE	WIND VELOCITY (mph)	POLE DATA: A HEIGHT	Min OD BASE	Min OD TOP	THICKNESS	ALTERNATIVE SECTION B LENGTH	ALTERNATIVE SECTION BOTTOM	ALTERNATIVE SECTION TOP	BASE PLATE DATA: C	BC = BOLT CIRCLE	THICKNESS	ANCHOR BOLT SIZE	LUMINAIRE MAST ARM	SIGNAL MAST ARM	CIDH PILE FOUNDATION Dia	CIDH PILE FOUNDATION DEPTH
16-1-100	1	100	18'-6"	12"	9⅜"	0.2391" OR 0.25"	None			1'-6"	1'-4"	2"	1¾"Ø x 42"	NONE	15'-0", [20'-0"]	3'-0"	9'-0"
18-1-100			17'-0"				None							NONE			
19-1-100			30'-0"	14"	9¾"		10'-0"	11⅛"	9¾"	1'-10"	1'-8"	2½"	2"Ø x 42"	6'-15' [12'-0"]	25'-0", [30'-0"]	3'-6"	10'-0"
19A-1-100			35'-0"		9"		15'-0"		9"					6'-15' [15'-0"]			

[ ] INDICATES MAST ARM LENGTH TO BE USED UNLESS OTHERWISE NOTED ON PLANS.

STATE OF CALIFORNIA
DEPARTMENT OF TRANSPORTATION

ELECTRICAL SYSTEMS (SIGNAL AND LIGHTING STANDARD, CASE 1 SIGNAL MAST ARM LOADING, WIND VELOCITY = 100 MPH AND SIGNAL MAST ARM LENGTHS 15' TO 30')

NO SCALE

RSP ES-7C DATED JULY 15, 2016 SUPERSEDES RSP ES-7C DATED OCTOBER 30, 2015 AND RSP ES-7C DATED JULY 19, 2013 AND STANDARD PLAN ES-7C DATED MAY 20, 2011 - PAGE 464 OF THE STANDARD PLANS BOOK DATED 2010.

REVISED STANDARD PLAN RSP ES-7C

2010 REVISED STANDARD PLAN RSP ES-7C

6-20-16