Dist	COUNTY	ROUTE	POST MILES TOTAL PROJECT	SHEET No.	TOTAL SHEETS

REGISTERED CIVIL ENGINEER

July 15, 2016

PLANS APPROVAL DATE

REGISTERED PROFESSIONAL ENGINEER Stanley P. Johnson No. C57793 Exp. 3-31-18 CIVIL STATE OF CALIFORNIA

THE STATE OF CALIFORNIA OR ITS OFFICERS OR AGENTS SHALL NOT BE RESPONSIBLE FOR THE ACCURACY OR COMPLETENESS OF SCANNED COPIES OF THIS PLAN SHEET.

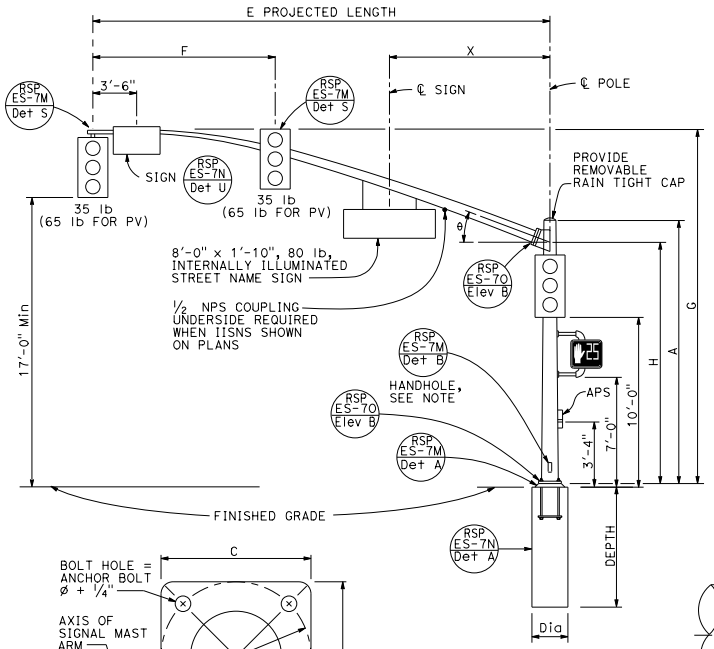

TYPE 18-4-100, 23-4-100, 27-4-100

ELEVATION A

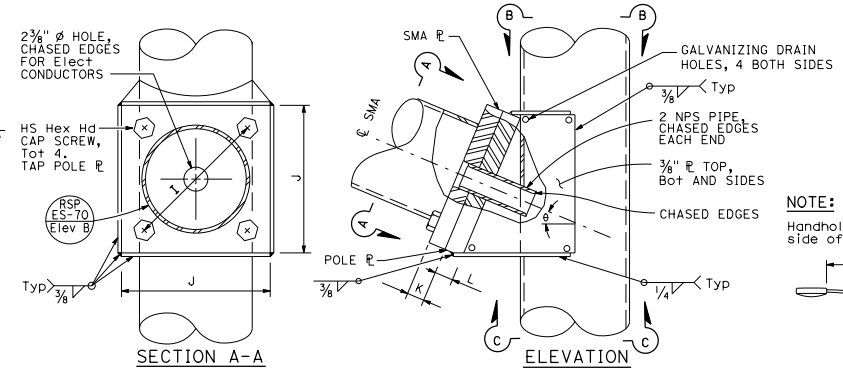

SIGNAL MAST ARM CONNECTION

DETAIL A

NOTE:

TO ACCOMPANY PLANS DATED _____

Handhole shall be located on the downstream side of traffic.

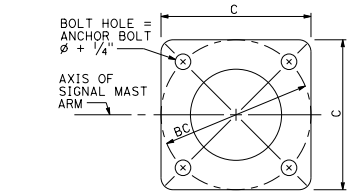

BASE PLATE

DETAIL B

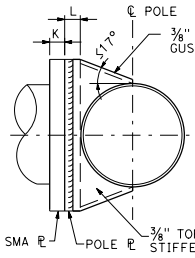

SECTION B-B

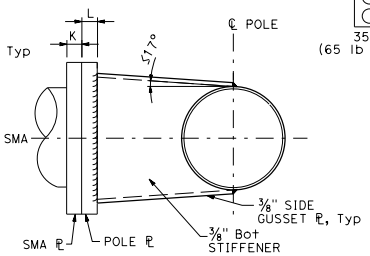

SECTION C-C

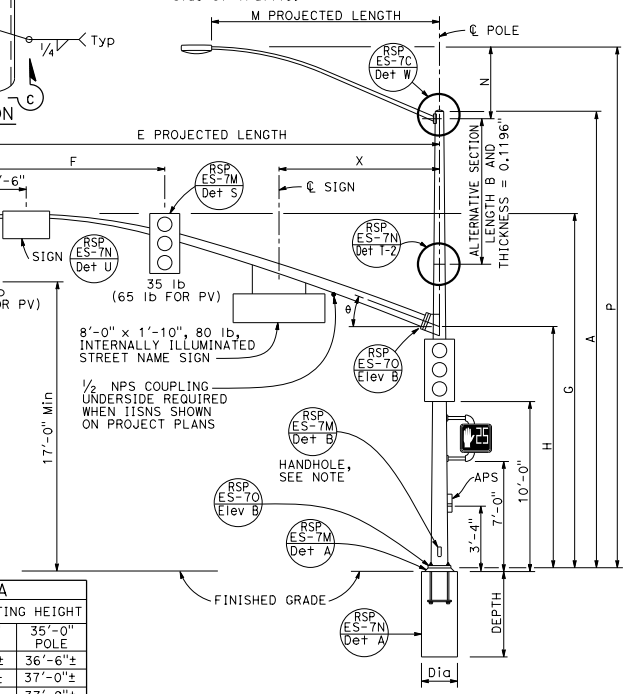

TYPE 19-4-100, 19A-4-100, 24-4-100, 24A-4-100, 26-4-100, 26A-4-100

ELEVATION B

SIGNAL MAST ARM DATA												
E PROJECTED LENGTH	F Min SPACING	G MOUNTING HEIGHT	H	Min OD AT POLE	THICKNESS	I BOLT CIRCLE	HS CAP SCREWS	J PLATE SIZE	K MAST ARM ℄ THICKNESS	L POLE ℄ THICKNESS	θ	X Max
25'-0"	10'-0"	22'-8"±	16'-0"	7 7/8"	0.2391"	12"	1 1/4"-7NC-3"	1'-3"	1 1/4"	1 1/2"	23°	10'-6"
30'-0"	12'-0"	23'-0"±		8"								
35'-0"	14'-0"			8 11/16"		13 1/2"			1 1/2"	1 3/4"	21°	
40'-0"	15'-0"			9 3/8"							15°	13'-0"
45'-0"		23'-8"±		10 1/4"				1'-5"				

LUMINAIRE MAST ARM DATA					
M PROJECTED LENGTH	N RISE	Min OD AT POLE	THICKNESS	P MOUNTING HEIGHT 30'-0" POLE	P MOUNTING HEIGHT 35'-0" POLE
6'-0"	2'-0"±	3 1/4"	0.1196"	31'-6"±	36'-6"±
8'-0"	2'-6"±	3 1/2"		32'-0"±	37'-0"±
10'-0"	3'-3"±	3 7/8"		32'-9"±	37'-9"±
12'-0"	4'-3"±			33'-9"±	38'-9"±
15'-0"	4'-9"±	4 1/4"		34'-3"±	39'-3"±

POLE TYPE	LOAD CASE	WIND VELOCITY (mph)	POLE DATA						BASE PLATE DATA				LUMINAIRE MAST ARM	SIGNAL MAST ARM	CIDH PILE FOUNDATION	
			A HEIGHT	Min OD BASE	Min OD TOP	THICKNESS	ALTERNATIVE SECTION B LENGTH	ALTERNATIVE SECTION BOTTOM	ALTERNATIVE SECTION TOP	C	BC = BOLT CIRCLE	THICKNESS	ANCHOR BOLT SIZE			Dia	DEPTH
18-4-100	4	100	17'-0"	16"	13 5/8"	0.2391" OR 0.25"				1'-11"	1'-9"	3"	2 1/4"ø x 42"	NONE	25'-0", [30'-0"]	3'-6"	12'-0"
19-4-100			30'-0"		11 3/4"		10'-0"	13 1/8"	11 3/4"					6'-15' [12'-0"]			
19A-4-100			35'-0"		11"		15'-0'	13 1/8"	11"					6'-15' [15'-0"]			
23-4-100			17'-0"		13 5/8"	0.3125"								NONE	35'-0"		
24-4-100			30'-0"		11 3/4"		10'-0"	15 1/8"	13 3/4"					6'-15' [12'-0"]			
24A-4-100			35'-0"		11"		15'-0"	13 1/8"	11"					6'-15' [15'-0"]			
26-4-100			30'-0"	18"	13 3/4"		10'-0"	15 1/8"	13 3/4"	2'-1"	1'-11"			6'-15' [12'-0"]	40'-0", [45'-0"]		13'-0"
26A-4-100			35'-0"		13"		15'-0"	15 1/8"	13"					6'-15' [15'-0"]			
27-4-100			17'-0"		15 5/8"									NONE			

[ ] INDICATES MAST ARM LENGTH TO BE USED UNLESS OTHERWISE NOTED ON PLANS.

STATE OF CALIFORNIA
DEPARTMENT OF TRANSPORTATION

ELECTRICAL SYSTEMS (SIGNAL AND LIGHTING STANDARD, CASE 4 SIGNAL MAST ARM LOADING, WIND VELOCITY=100 MPH AND SIGNAL MAST ARM LENGTHS 25' TO 45')

NO SCALE

RSP ES-7F DATED JULY 15, 2016 SUPERSEDES RSP ES-7F DATED OCTOBER 30, 2015 AND RSP ES-7F DATED JULY 19, 2013 AND STANDARD PLAN ES-7F DATED MAY 20, 2011 - PAGE 467 OF THE STANDARD PLANS BOOK DATED 2010.

REVISED STANDARD PLAN RSP ES-7F

2010 REVISED STANDARD PLAN RSP ES-7F

6-20-16