Dist	COUNTY	ROUTE	POST MILES TOTAL PROJECT	SHEET No.	TOTAL SHEETS

REGISTERED CIVIL ENGINEER

May 20, 2011
PLANS APPROVAL DATE

REGISTERED PROFESSIONAL ENGINEER
Tilliat Satter
No. C42892
Exp. 3-31-12
CIVIL
STATE OF CALIFORNIA

THE STATE OF CALIFORNIA OR ITS OFFICERS OR AGENTS SHALL NOT BE RESPONSIBLE FOR THE ACCURACY OR COMPLETENESS OF SCANNED COPIES OF THIS PLAN SHEET.

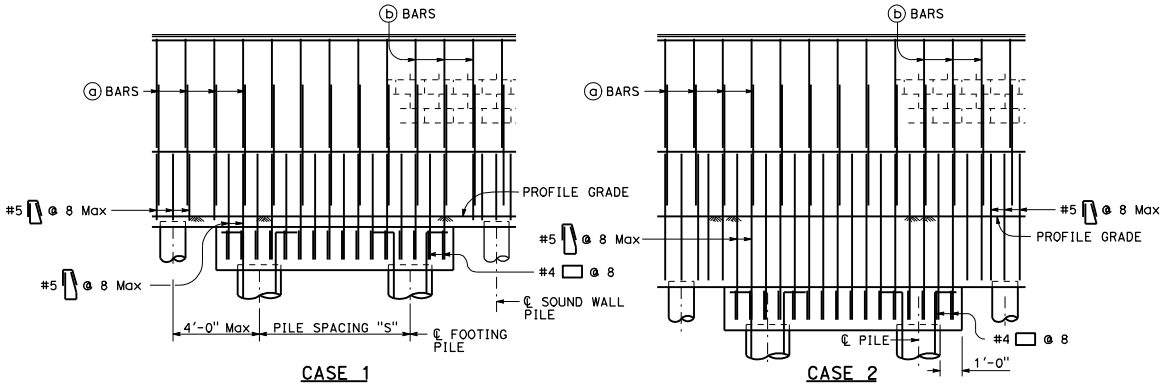

CASE 1

For details not shown, see Case 2.

CASE 2

For details not shown, see Case 1.

PART ELEVATIONS

DESIGN NOTES:

DESIGN

Uniform Building Code, 1997 Edition
and the Bridge Design Specifications.

DESIGN WIND LOAD

27 psf

DESIGN SEISMIC LOAD

0.57 Dead load

REINFORCED CONCRETE

f'c = 3.6 ksi
fy = 60 ksi

CONCRETE MASONRY

REGULAR STRENGTH	HIGH STRENGTH	
f'm = 1500 psi	f'm = 2000 psi	
fb = 495 psi	fb = 660 psi	fb = 830 psi
fs = 24,000 psi	fs = 24,000 psi	fs = 24,000 psi
n = 25.8	n = 19.3	n = 15.5

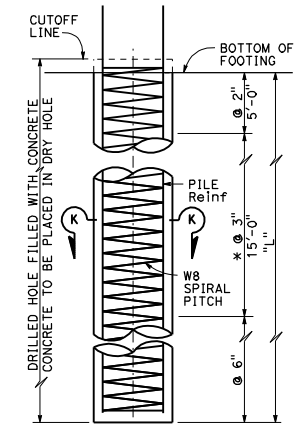

ELEVATION

* @ 2" at option of Contractor.

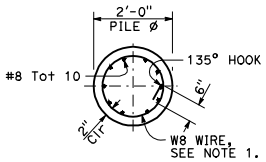

SECTION K-K

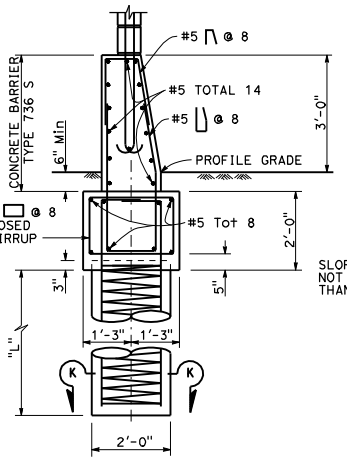

CASE 1

Level ground ±10% on both sides of barrier.
For details not shown, see Case 2.

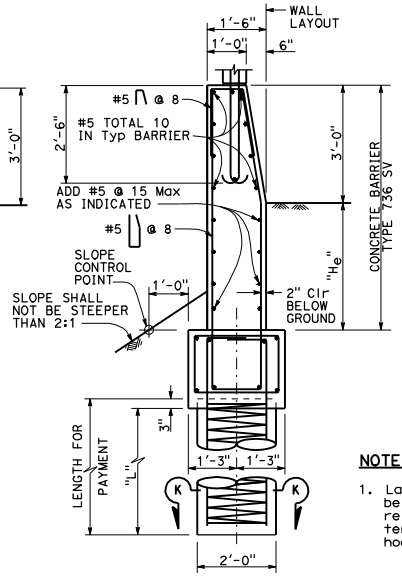

CASE 2

Level ground ±10% at the traffic side of barrier and sloping ground on the opposite side.
For details now shown, see Case 1.

BARRIER SECTIONS

NOTE:

1. Lapped splices in Spiral reinforcement shall be lapped at least 80 wire diameters. Spiral reinforcement at splices and at ends shall be terminated with a 135° hook with a 6" tail hooked around a logitudinal bar.

CASE 1 : PILE DATA TABLE

MAXIMUM H	ø = 25 S	ø = 25 L	ø = 30 S	ø = 30 L	ø = 35 S	ø = 35 L	MAXIMUM H
6'-4"	16'-0"	8'-6"	16'-0"	7'-6"	16'-0"	6'-0"	6'-4"
8'-4"	16'-0"	9'-6"	16'-0"	8'-0"	16'-0"	7'-0"	8'-4"
10'-4"	16'-0"	10'-6"	16'-0"	9'-0"	16'-0"	7'-6"	10'-4"
12'-4"	16'-0"	11'-6"	16'-0"	10'-0"	16'-0"	8'-6"	12'-4"
14'-4"	16'-0"	12'-6"	16'-0"	11'-0"	16'-0"	9'-0"	14'-4"
16'-4"	16'-0"	13'-6"	16'-0"	11'-6"	16'-0"	10'-0"	16'-4"

CASE 2 : PILE DATA TABLE

H_e	H	ø = 30 Min S	ø = 30 Min L	ø = 35 Min S	ø = 35 Min L	H
1'-0"	6'-4"	16'-0"	15'-6"	16'-0"	12'-0"	6'-4"
	8'-4"	16'-0"	17'-0"	16'-0"	13'-6"	8'-4"
	10'-4"	16'-0"	18'-0"	16'-0"	14'-6"	10'-4"
	12'-4"	16'-0"	19'-6"	16'-0"	15'-6"	12'-4"
	14'-4"	16'-0"	20'-6"	16'-0"	16'-6"	14'-4"
	16'-4"	16'-0"	21'-6"	16'-0"	17'-6"	16'-4"
2'-0"	6'-4"	16'-0"	18'-0"	16'-0"	14'-0"	6'-4"
	8'-4"	16'-0"	19'-0"	16'-0"	15'-0"	8'-4"
	10'-4"	16'-0"	20'-0"	16'-0"	16'-0"	10'-4"
	12'-4"	16'-0"	21'-6"	16'-0"	17'-0"	12'-4"
	14'-4"	16'-0"	22'-6"	16'-0"	18'-0"	14'-4"
	16'-4"	14'-6"	22'-6"	16'-0"	18'-6"	16'-4"
3'-0"	6'-4"	16'-0"	20'-6"	16'-0"	15'-6"	6'-4"
	8'-4"	16'-0"	21'-6"	16'-0"	16'-6"	8'-4"
	10'-4"	15'-6"	22'-0"	16'-0"	17'-6"	10'-4"
	12'-4"	14'-0"	22'-0"	16'-0"	18'-6"	12'-4"
	14'-4"	13'-0"	22'-6"	15'-6"	19'-0"	14'-4"
	16'-4"	12'-0"	22'-6"	14'-0"	19'-0"	16'-4"
4'-0"	6'-4"	13'-0"	21'-0"	16'-0"	17'-6"	6'-4"
	8'-4"	12'-3"	21'-6"	15'-3"	18'-0"	8'-4"
	10'-4"	11'-6"	21'-6"	14'-3"	18'-6"	10'-4"
	12'-4"	10'-9"	22'-0"	13'-3"	18'-6"	12'-4"
	14'-4"	10'-0"	22'-0"	12'-3"	18'-6"	14'-4"
	16'-4"	9'-6"	22'-6"	11'-3"	19'-0"	16'-4"

STATE OF CALIFORNIA
DEPARTMENT OF TRANSPORTATION

SOUND WALL MASONRY BLOCK ON TYPE 736S/SV BARRIER ON PILE FOOTING FOR SPANNING UTILITIES

NO SCALE

B15-15

2010 STANDARD PLAN B15-15

6-10-09