Technical Report Documentation Page

1. REPORT No.

2. GOVERNMENT ACCESSION No.

3. RECIPIENT'S CATALOG No.

4. TITLE AND SUBTITLE

Dynamic Full Scale Impact Tests of Cable Type Median Barriers Test Series IX

5. REPORT DATE

June 1965

6. PERFORMING ORGANIZATION

7. AUTHOR(S)

Field, R.N. and M.H. Johnson

8. PERFORMING ORGANIZATION REPORT No.

Project W.O. 6302

9. PERFORMING ORGANIZATION NAME AND ADDRESS

State of California
Highway Transportation Agency
Department of Public Works
Division of Highways
Materials and Research Department

10. WORK UNIT No.

11. CONTRACT OR GRANT No.

12. SPONSORING AGENCY NAME AND ADDRESS

13. TYPE OF REPORT & PERIOD COVERED

14. SPONSORING AGENCY CODE

15. SUPPLEMENTARY NOTES

A study made by the California Division of Highways in cooperation with the U.S. Dept. of Commerce Bureau of Public Roads

16. ABSTRACT

Synopsis

Test Series IX representing six full scale dynamic impact tests of cable type median barriers, using both sports cars and standard size vehicles, was conducted during the spring of 1964. The six impact tests conducted on cable-chain link barriers placed on simulated raised and sawtoothed medians were preceded by ten preliminary vehicle jump tests. The purpose of the jump tests was to develop test criteria for establishing the most effective cable height and spacing to be used in the subsequent dynamic impact tests.

This report describes the test procedures and results based on data secured from the ten preliminary jump tests and the six high speed impact tests. Recommendations, based on the results of this Test Series IX, are made for establishing the criteria to be used in determining the physical placement of cable type barriers on flat, raised, and sawtooth type medians.

Radio control techniques and photographic instrumentation used for this test series were identical to those used in previous barrier test series. For a detailed description and discussion on these features of the test program, see References 1 and 2.

17. KEYWORDS

Exp. Auth. 300119
Project W.O. 6302

18. No. OF PAGES:

58

19. DRI WEBSITE LINK

http://www.dot.ca.gov/hq/research/researchreports/1964-1965/65-26.pdf

20. FILE NAME

65-26.pdf

This page was created to provide searchable keywords and abstract text for older scanned research reports.
November 2005, Division of Research and Innovation

25

STATE OF CALIFORNIA
HIGHWAY TRANSPORTATION AGENCY
DEPARTMENT OF PUBLIC WORKS
DIVISION OF HIGHWAYS

DYNAMIC FULL SCALE IMPACT TESTS

OF

CABLE TYPE MEDIAN BARRIERS
TEST SERIES IX

A STUDY MADE BY THE
CALIFORNIA DIVISION OF HIGHWAYS
IN COOPERATION WITH THE
U.S. DEPT. OF COMMERCE
BUREAU OF PUBLIC ROADS

65-26
DND

JUNE 1965

ClibPDF - www.fastio.com

State of California
Highway Transportation Agency
Department of Public Works
Division of Highways
Materials and Research Department

June 1965

Exp. Auth. 300119
Project W.O. 6302

Mr. J. C. Womack
State Highway Engineer
California Division of Highways
Sacramento, California

Dear Sir:

Submitted for your consideration is a report of:

DYNAMIC FULL SCALE IMPACT TESTS

OF

CABLE TYPE MEDIAN BARRIERS

TEST SERIES IX

Study made by . . . . . Structural Materials Section
Under the direction of . . . . . E. F. Nordlin
Work supervised by . . . . . R. N. Field
Project engineer . . . . . M. H. Johnson
Photographic instrumentation . . . . . R. M. Souza
Report prepared by . . . . . R. N. Field and M. H. Johnson

Very truly yours,

JOHN L. BEATON
Materials and Research Engineer

RNF/MHJ:mw
cc: LRGillis
ACEstep
JEWilson
CGBeer

ClibPDF - www.fastio.com

TABLE OF CONTENTS

SYNOPSIS

		Page
I.	BACKGROUND AND INTRODUCTION	1
II.	OBJECTIVES	4
III.	CONCLUSIONS	5
IV.	RECOMMENDATIONS	6
V.	DISCUSSION	9
VI.	BARRIER TESTS	19
	Plate 90 Standard Plan	
	Test No. 91-A through C	
	Test No. 92-A through C	
	Test No. 93-A through C	
	Test No. 94-A through C	
	Test No. 95-A through C	
	Test No. 96-A through C	
VII.	REFERENCES	39

ClibPDF - www.fastio.com

SYNOPSIS

Test Series IX representing six full scale dynamic impact tests of cable type median barriers, using both sports cars and standard size vehicles, was conducted during the spring of 1964. The six impact tests conducted on cable-chain link barriers placed on simulated raised and sawtoothed medians were preceded by ten preliminary vehicle jump tests. The purpose of the jump tests was to develop test criteria for establishing the most effective cable height and spacing to be used in the subsequent dynamic impact tests.

This report describes the test procedures and results based on data secured from the ten preliminary jump tests and the six high speed impact tests. Recommendations, based on the results of this Test Series IX, are made for establishing the criteria to be used in determining the physical placement of cable type barriers on flat, raised, and sawtooth type medians.

Radio control techniques and photographic instrumentation used for this test series were identical to those used in previous barrier test series. For a detailed description and discussion on these features of the test program, see References 1 and 2.

This study was conducted in cooperation with the Bureau of Public Roads.

ClibPDF - www.fastio.com

I. BACKGROUND AND INTRODUCTION

Cable-chain link median barriers were initially installed on California freeways in 1959. The design for this flexible type of median barrier was the result of an extensive series of dynamic full scale impact tests. These initial tests were all conducted on flat pavement, using standard size vehicles, and in one case a 36-passenger bus (Reference 1).

After one year's operational experience on two trial installations (one in Oakland and one in the Los Angeles area), maintenance studies indicated that labor saving improvements in design details of the cable barrier were desirable. Test Series VI (Reference 2) was initiated in 1961 for the primary purpose of observing the effect that various suggested maintenance improvements would have on the over-all effectiveness of the cable type barrier under full scale dynamic impact conditions. The one year operational study also indicated that more information was needed concerning the effect of the cross-section and profile of the highway median surface on the trajectory of the fast moving automobile. Two of the nine tests in this 1961 series were conducted to determine the most effective placement of a cable type barrier on the shoulder of a curve with an 8 percent superelevation and with a 6:1 side slope in the median. A ramp was constructed to simulate the 8 percent superelevation. The vehicles in both these tests approached the barrier from the superelevated side.

An additional four full scale dynamic impact tests were scheduled for early in 1963 and designated Test Series VII. This test series was conducted primarily to determine if the chain link mesh could be deleted from the cable type barrier without materially affecting the efficiency of the barrier. All four tests in Series VII were conducted on simulated flat medians using standard size vehicles. Test results proved that deletion of the mesh had no adverse effect on the operating efficiency of the barriers, although it was found that the relative length of the damaged sections was understandably greater when the mesh was deleted (Reference 3).

Continued operational experience indicated that the retention efficiency of the cable type barrier was sensitive to the vertical position of the cables and to the presence of ditches, dikes, curbs, and particularly sawtooth sections in the medians (see typical sawtooth median in Fig. 1 on following page).

ClibPDF - www.fastio.com

Fig. 1

Accident reports indicate that vehicles, particularly small sports cars, impacting from the low side of a sawtooth median have penetrated under the barrier in locations where the cable height has been 30 inches or more above the ground. On some occasions, standard size vehicles approaching from the high side of a sawtooth median have gone over or straddled the cables placed at a 30 inch height above the ground measured from the base of the post. The presence of dikes or the placement of the barrier partially down the median slope contributed to this climbing tendency on sawtooth sections. It was apparent that the sawtooth median configuration presented conflicting design controls for the placement of a cable barrier. After reviewing past cable barrier tests, accident reports, and impact test results of other researchers on cable type barriers, it was decided that the only possible method of meeting these conflicting controls with a cable type barrier would be to place cables at two different heights, say 18" and 27". However, before placing a two-height cable system in operation on the freeways, it was considered essential that a test series be conducted to determine if this cable arrangement would be effective under various controlled impact conditions without introducing any unforeseen detrimental effects.

ClibPDF - www.fastio.com

Operational experience also indicated that when the cables had been placed at the standard 30 inch height above the ground (measured from the base of the post) similar penetration problems had been encountered with cable barriers on raised medians, in ditched medians or where an asphalt dike had been placed in front of the barrier.

Therefore, in order to obtain information that would aid in clarifying conflicting design controls for the placement of the cable type barrier on sawtooth medians or medians with an uneven terrain and determine the most effective cable height for the cable type barrier on raised medians, Full Scale Dynamic Impact Test Series IX was initiated.

ClibPDF - www.fastio.com

II. OBJECTIVES

The basic objectives of Series IX cable barrier impact tests were as follows:

1. To determine by means of preliminary jump tests the theoretical cable height that would result in the maximum effectiveness of the cable type barrier constructed on a raised median.

2. To conduct a series of dynamic impact tests to determine if the cable height determined from the jump tests was effective in preventing penetrations under or over a cable type barrier erected on a raised median.

3. To develop a cable system with the cables placed at two different heights for use on sawtooth type medians. It was important that this two-height cable system would not only prevent a vehicle from climbing when impacting from the high side of the sawtooth but that it would also be completely effective in preventing penetration under the cables from the low side.

ClibPDF - www.fastio.com

III. CONCLUSIONS

From an analysis of the data resulting from the ten preliminary jump tests and the six full scale impact tests, the following conclusions were made:

1. The preliminary jump tests showed that to be completely effective at all angles and for all types of vehicles, a cable installed at a single height in a barrier on a narrow raised median would have to cover a band at least 7 inches wide.

2. The most effective cable height for cable type barriers on narrow paved raised medians is between 27 and 28 inches above the median surface.

3. No effective single cable height or combination of cable heights was found that would consistently contain vehicles approaching from both sides of a sawtooth median or median with an uneven terrain. It is recommended that the standard double blocked-out beam type median barrier with beam heights staggered as necessary be used in all such locations.

ClibPDF - www.fastio.com

IV. RECOMMENDATIONS

From an analysis of the data resulting from the six full scale impact tests, the following recommendations are made:

All Medians

1. For cable type median barrier use, the minimum median width should be 22 feet to provide safe allowance for cable deflection during impact and permit maintenance to be performed completely off of the traffic lanes.

2. The cables on the cable type median barrier should be tensioned to eliminate critical drooping during hot weather.

3. Only two cables at the single recommended height should be used. Additional cables at other heights or vertical separation of the two cables should not be permitted.

4. Where dikes are used to intercept drainage, the cable barrier should be located within 12 inches, center to center, of the dike or at a considerable distance (more than 6 feet) from the dike. Dikes should be no higher than 6 inches and preferably 4 inches high adjacent to the cable type median barrier.

Raised Paved Median

1. Cable height should be held to between 27" and 28" above the paved median surface.

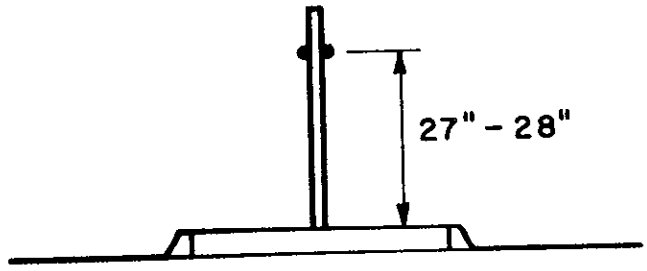

ClibPDF - www.fastio.com

Flat Medians (10:1 slope or flatter)

1. On paved flat medians the cable height should be held to between 27" and 28" above the paved median surface exclusive of any localized ditch surface.

2. On unpaved flat medians the cable height should be held to between 27" and 30" above the ground surface of the median exclusive of any localized ditch surface.

3. Where planting and attendant irrigation trenches are located in the center of the median, consideration should be given to placing the cable type median barrier on flatter ground on one side or the other.

4. The cross-section profile of the median in the immediate vicinity of the cable type barrier should be relatively flat.

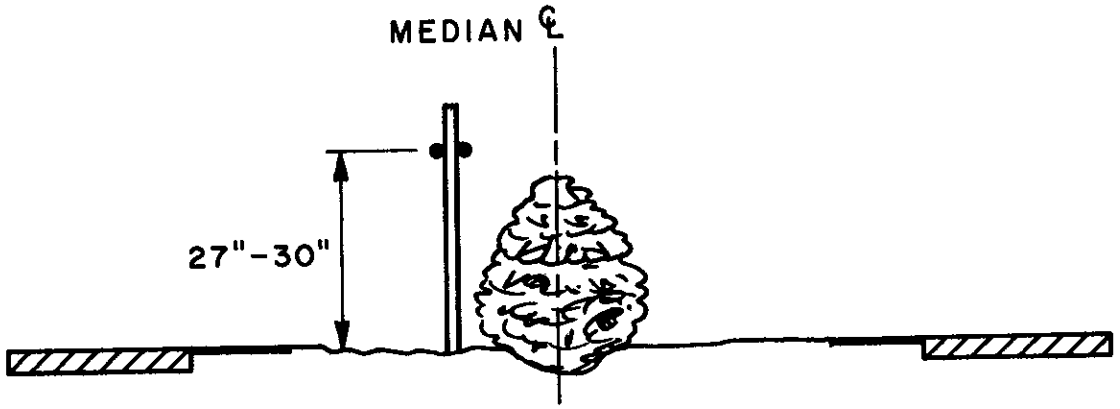

UNPAVED OR PLANTED

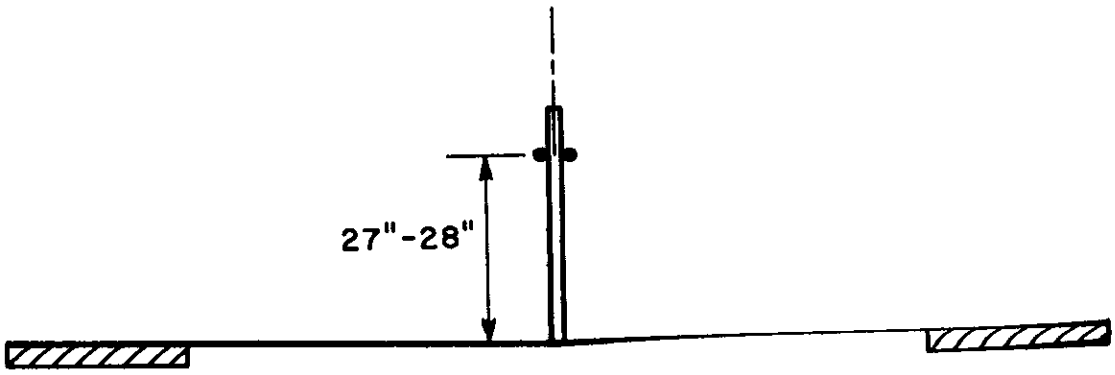

PAVED

ClibPDF - www.fastio.com

Sloped or Sawtooth Median (6:1 or steeper slopes)

1. When the sawtooth step is over 6 inches high and/or the median slope 3:1 or steeper, the beam type median barrier, staggering beam heights as necessary should be used on the high side rather than a single cable type barrier.

2. With the sawtooth step 6 inches or less in height or the median slope flatter than 3:1, either the beam type or cable type median barrier may be used. If the cable type barrier is used, it should be located at the top of the slope at the shoulder hinge point. The cable height should be held to between 27" or 28" above the adjacent paved shoulder surface.

3. Under certain circumstances where median slope and width permit, consideration may be given to an envelope design for installation of the cable type barrier.

4. Where the beam type median barrier is required, the minimum length of any installation should be 100 feet.

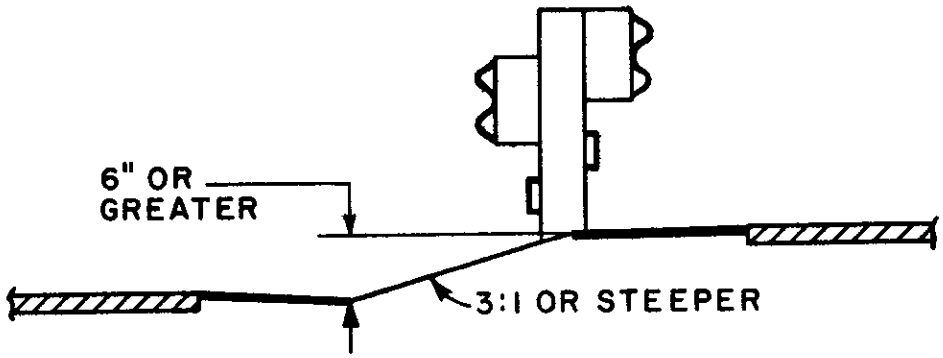

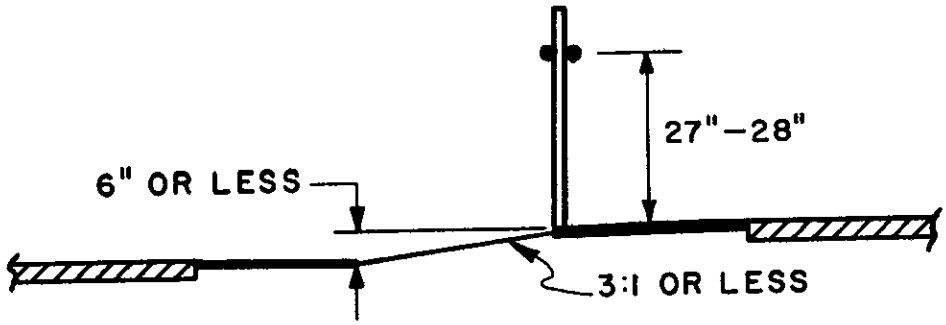

ClibPDF - www.fastio.com

V. DISCUSSION

A. Jump Tests

A review of three years of accident reports involving vehicles penetrating under the cables and through the barriers indicated that the majority of these cases occurred on narrow raised medians. The original 30 inch design height of the cables for the cable-chain link barrier system was determined from a controlled dynamic impact test series on a simulated flat median surface. As a raised median is approximately 6 inches higher than the adjacent roadway surface, the resultant cable height is 36 inches above the roadway surface. In view of the increasing number of penetration accidents on the raised medians, it was desirable to determine if a more effective cable height could be designed for cable barriers on raised medians.

For the purpose of selecting a practical cable height for the dynamic tests on a simulated raised median, preliminary jump tests were conducted on the simulated raised median installation before erecting the barrier. Data from these preliminary tests indicated the vehicle jump and the reaction of the vehicle when compressing the front suspension as it contacted a 6 inch curb and crossed a raised median.

1. Selection of Test Vehicles.

Accident reports indicated that both sports cars and standard vehicles had penetrated the barrier. A study on front end profiles of the 60 most popular standard size sedans and twelve small sports cars from 1958 through 1963 models was conducted. This study determined the most critical profiles to consider in the selection of the test vehicles. The 1960 Ford was found to have one of the lowest front end profiles of the domestic standard size sedans (see Exhibit 1). Also, the center of gravity, weight, and front suspension reaction of this model were average for the vehicles investigated. Therefore, the 1960 Ford was selected as the standard size test vehicle.

Three different size sports car type vehicles were selected for the jump tests. The Austin Healy Sprite was selected as representative of the smallest type sports car (1465 lbs. and 13 inch wheels), the Triumph TR-3 as representative of the intermediate size sports car (2180 lbs. and 15 inch wheels), and the Corvette as representative of the large size sports car (3000 lbs. and 15 inch wheels). Although the Corvette and the Triumph have the same size wheels, both were selected as their weight, front suspension reactions, and projection of the front end over the wheels were significantly different (see Exhibit 2). After

ClibPDF - www.fastio.com

completing the jump tests and reviewing the data films, the Triumph TR-3 was selected as the average sports car and was used in three subsequent impact tests.

2. Selection of Raised Median.

The paved raised median selected for the jump tests and dynamic impact tests was 7 ft. wide with a 6 in. Type B concrete curb. The 7 ft. wide median is typical of the majority of the paved raised medians on the Nimitz, Santa Ana, and Eastshore freeways. The Type B curb was representative of the curb type prevalent on these freeways at the majority of the penetration accident sites.

3. Test Procedure.

Ten jump tests were conducted on the raised median. One test was conducted with each of the four vehicles at a 25° approach angle and one test with each of the four vehicles at a 7° approach angle. An additional jump test was conducted with the Triumph and Corvette at the 7° approach angle with the brakes applied remotely just prior to impact.

4. Test Results.

At the 25° approach angle (Exhibits 6 through 9), the front wheels of all four vehicles recessed into the fender well as they hit the curb. None of the vehicle bodies recovered to their original height above the underlying ground surface before passing the center of the median. The hoods of the three sports cars presented a profile almost one inch lower than normal at centerline and the Ford was four inches below normal. Exhibit 3-A shows the vertical trajectory of the various vehicles at the 25° approach angle as a function of the distance from first contact with the curb.

At the 7° approach angle (Exhibits 10 through 13) none of the vehicles presented a lower-than-normal profile at the centerline of the median. The longer distance provided time for the front wheels and suspension to not only fully recover from the recessed state but also aided the vehicle into a jump. Exhibit 3-B indicates that at flat angles of approach the difference in springing and steering reactions of each vehicle altered the various trajectories as can be noted by the marks indicating the varying distance from contact to centerline of the median. Note that there is a variance between vehicle paths from curb impact to median centerline of more than 12 ft. travel distance.

The results of the two tests conducted on sports cars with brakes locked just prior to impact (Exhibits 14 and 15) indicated that the vehicles regained normal height

ClibPDF - www.fastio.com

above the underlying ground surface when they crossed the centerline of the median. The locking of the brakes did not materially affect the distance traveled from initial contact with the curb to the center of the median but seemed to retard the vehicle rise.

Exhibit 4 shows the relative position of the various vehicles as they crossed the centerline of the 7 ft. wide raised test median. It can be seen that impacting the 6 inch high curb caused the various vehicles to rise between two and nine inches above the adjacent traveled roadway surface as they crossed the median centerline. A two inch total rise in reality represents a 4 inch "dive" relative to the surface of the raised median, whereas a 9 inch rise would represent a 3 inch jump with reference to the raised median surface. This difference between jump and "dive" represents a band approximately 7 inches wide which is illustrated in Exhibit 5.

B. Dynamic Impact Tests

1. Raised Medians.

It was concluded from the preliminary jump tests that it was impossible to establish a cable height which would cover the entire 7 inch band necessary to trap all "diving" or "jumping" vehicles. However, operational experience has shown that most cable-type barrier penetration accidents on raised medians are caused by the vehicle pentrating under the cables.

In consideration of these penetration occurrences, it was decided to conduct the full scale dynamic impact tests on the cable-type barrier, erected on a raised median, with the cables placed at 26 inches above the median surface which is 4 inches below the current standard 30 inch height. It was felt that this 26 inch cable height was marginal and as low as could be considered practical without becoming critical to vehicle climb. Therefore, the first impact test was conducted with the standard size vehicle (Ford) at the 7 degree angle of approach (the critical situation where the vehicle could rise and climb over the 26 inch high barrier cable).

The complete performance for this test, Test No. 91, is outlined on Plates 91-A, B, and C. It is significant to note that even though this 26 inch high barrier retained the vehicle there was a strong tendency for the vehicle to climb the cable when impacting at this narrow angle.

ClibPDF - www.fastio.com

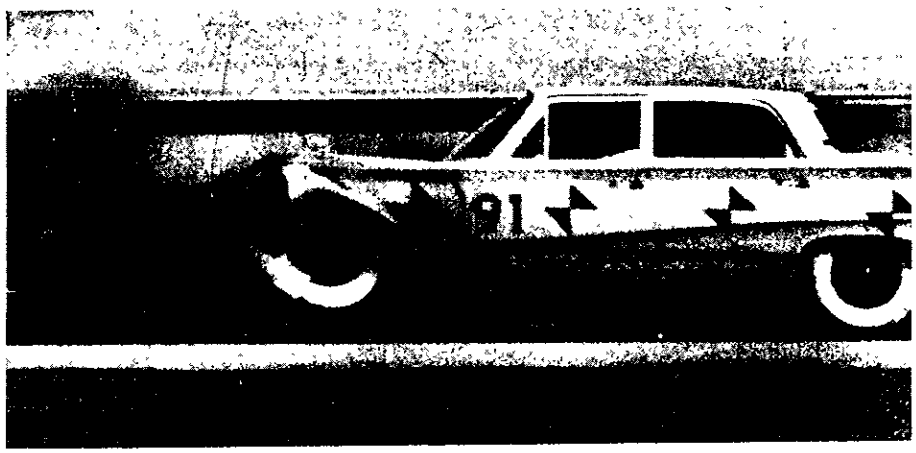

Fig. 2

Note in Figure 2 above that the cable is at the mid-point of the wheel. Had the vehicle continued to rise above this point, it is probable that the wheel would have rolled over the cable and vaulted the barrier. It was concluded from the results of this first test that the 26 inch cable height was marginal and would probably have to be raised to a height of from 27 to 28 inches above the paved median surface.

The second test, Test No. 92, on the 26 inch cable height was with a sports car at a wide angle of approach (25°), the critical situation for penetration under the cables.

The complete performance for this test is outlined on Plates 92-A, B, and C. The barrier performed effectively in retaining the sports car. As the vehicle first contacted the cable at the center of its left headlight, approximately 26 inches above ground (see Figure 3), it was evident that if the cable were placed one or two inches higher, it still would have retained the vehicle.

ClibPDF - www.fastio.com

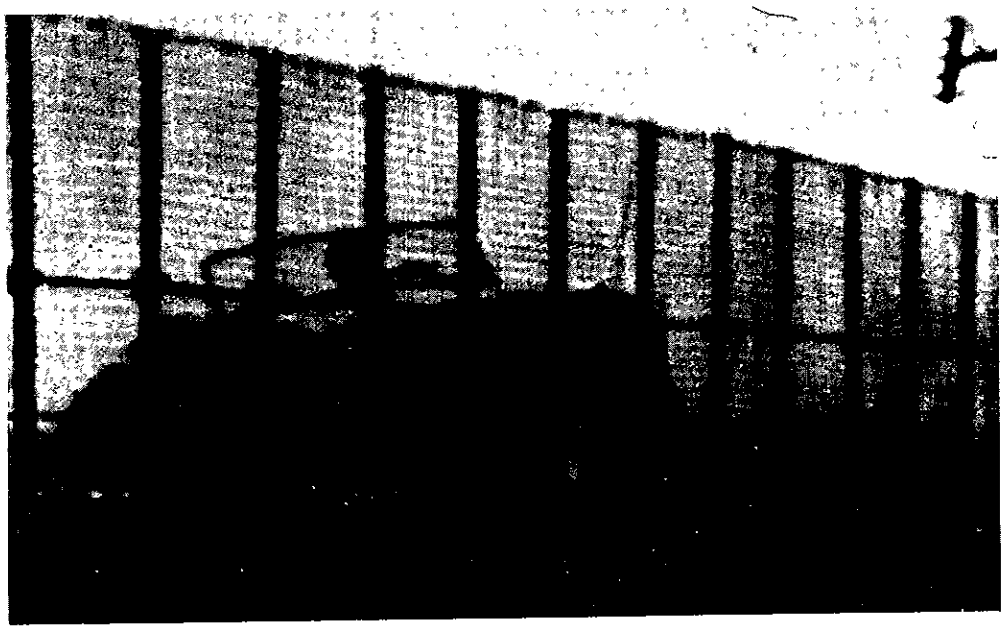

Fig. 3

It was interesting to note that vertical vehicle trajectories of these first two impact tests were very similar to those of the preliminary jump tests.

In summary, the first two impact tests represented the two major concerns involving a cable type barrier on a narrow raised median, e.g. (1) a standard size vehicle climbing the barrier at a flat (7 deg.) angle of approach and (2) sports car penetrating under the cables at a wide (25 deg.) angle of approach. From the results of Tests 91 and 92, it was concluded that 27 inches was the lowest height a cable could be placed above a paved raised median surface without introducing a climbing tendency to a standard size vehicle colliding at a narrow angle. Because of the low front end profile of a sports car, it was felt that the cable should not be placed higher than 28 inches above the paved raised median surface without increasing the probability of the sports car penetrating under the cables. Therefore, the 27 to 28 inches was selected as a compromise cable height for cable-chain link barriers erected on raised paved medians.

2. Sawtooth Medians.

A sawtooth section presents conflicting design controls for application of a cable-type barrier. With this type of median section, it is desirable to maintain the cable height at 27 inches or less to prevent vehicles (particularly sports cars) approaching from the low side at wide angles, from penetrating under the barrier. On the other hand it is possible for a vehicle approaching from the high side at a flat angle to climb over any cable barrier less than

ClibPDF - www.fastio.com

27 inches high. Theoretically, the ideal cable arrangement for sawtooth medians would be to place the cables at two different heights, one at a height to prevent penetrations under the barrier from the low side and one at a height to prevent climbing over the barriers from the high side.

However, in actual practice, this arrangement has proven ineffective. Operating experience has shown that with a two-height cable arrangement (1958 design - 1 cable @ 9" and 2 cables @ 30"), the lower cable tends to assist a vehicle in climbing up and over the barrier (Ref. 2). The bottom cable on this design was deleted on all new barriers constructed after 1961. Subsequently, the bottom cable was removed from all existing cable barriers.

It was felt that the climbing problem experienced on the 1958 design could be eliminated if a single lower cable was attached to the posts on the low side of the sawtooth in such a manner that it would function as break-away cable and fall to the ground when struck from the high side. A break-away cable would not add to the climbing tendency because it would not provide support to the vehicle wheel or any rigidity to the barrier system. However, it was also considered essential that the break-away cable remain in place when hit from the low side in order to prevent a vehicle from penetrating under the barrier. Figure 4 below shows the break-away system selected as the first test design (Test 93).

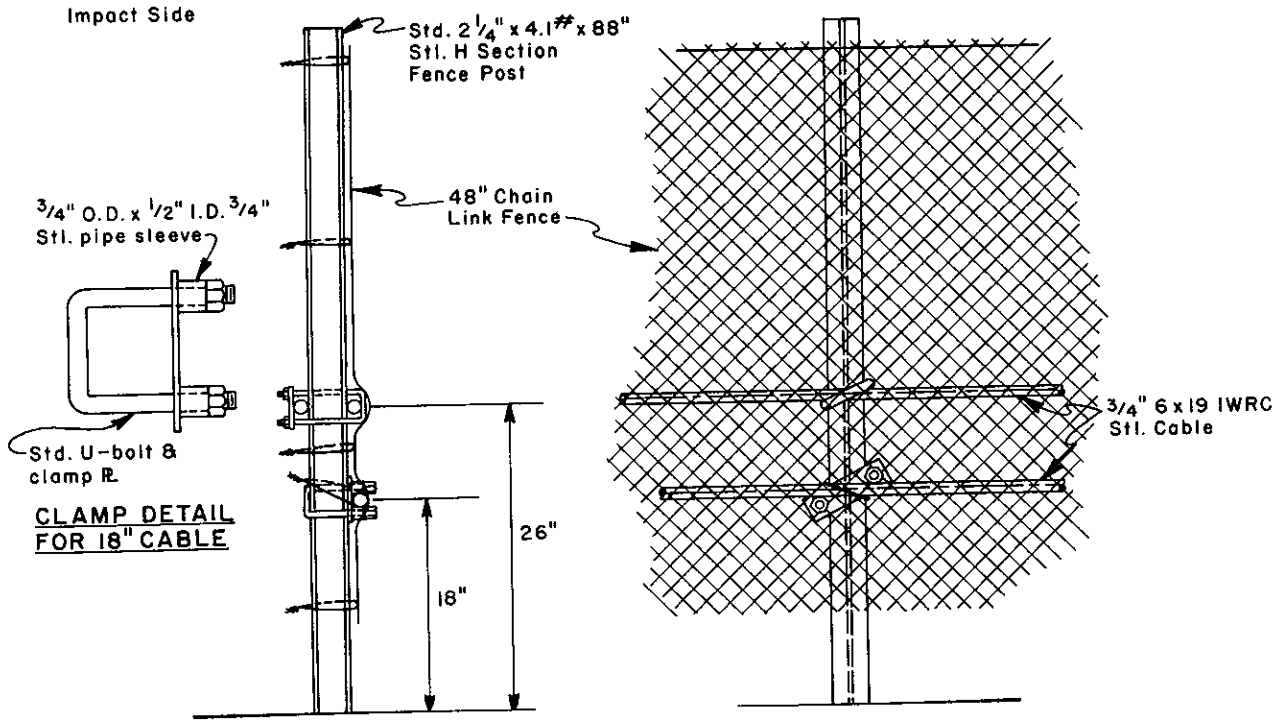

BREAK-AWAY CABLE MOUNTING DETAIL
FOR RUN NO. 93

Fig. 4

ClibPDF - www.fastio.com

Note that the top cables were attached in the standard manner, and the lower cable was inserted between the protruding ends of a U-bolt and secured to the post with 12 ga. steel tie wire. The chain link mesh was attached to the posts on the side opposite impact, so as not to aid the vehicle in climbing over the barrier. The two top cables for this barrier design were placed 26 inches above the ground. The results of the previous two tests indicated that any cable height below 26 inches would be critical to vehicle climb from the high side of the sawtooth. There was also apprehension that top cables placed too high could decapitate a sports car driver penetrating underneath. For test purposes, this barrier was erected on a flat pavement surface representing the high side of a sawtooth design. It was felt that the attitude of the vehicle and subsequent vehicle reaction with reference to the roadway was not any different on a flat roadway than on a superelevated curve.

This test, Test No. 93, was conducted to simulate an impact from the high side of a sawtooth section (the critical situation for vehicle climb). A standard size passenger vehicle was used, impacting at a narrow angle (7 deg.).

A complete performance for Test No. 93 is outlined on Plates 93-A, B, and C. In this test the lower cable did not break away as expected. The U-clamps twisted as the posts deflected and locked the lower cable in place (see Plate 93-C). The failure of the break-away cable to function as planned produced a rapid deceleration to a violent nose stand. The trapped vehicle then rolled on its side as it made a 180 deg. spin-out, which almost resulted in a complete roll over. There was a tendency for the vehicle to climb the barrier in this test.

From the results of Test No. 93, it was concluded that the break-away system using U-clamps to retain the lower cable in its vertical position was not effective in permitting the cable to release on impact. It also confirmed the conclusions made after Test No. 91 that the 26" cable height for the upper cables was marginal as the vehicle had a tendency to vault the barrier.

The next impact test, Test No. 94, was performed on the cable-type barrier with the lower break-away cable design revised. For the new design, the lower cable was tied to the post with 12 ga. steel tie wire. The vertical position was maintained by resting the cable on a 3/8" button head rivet driven into the flange of the post (see Figure 5). The top cable height was raised 1" from the critical 26" height used for the previous test to 27". All other parameters remained the same as for Test No. 93.

ClibPDF - www.fastio.com

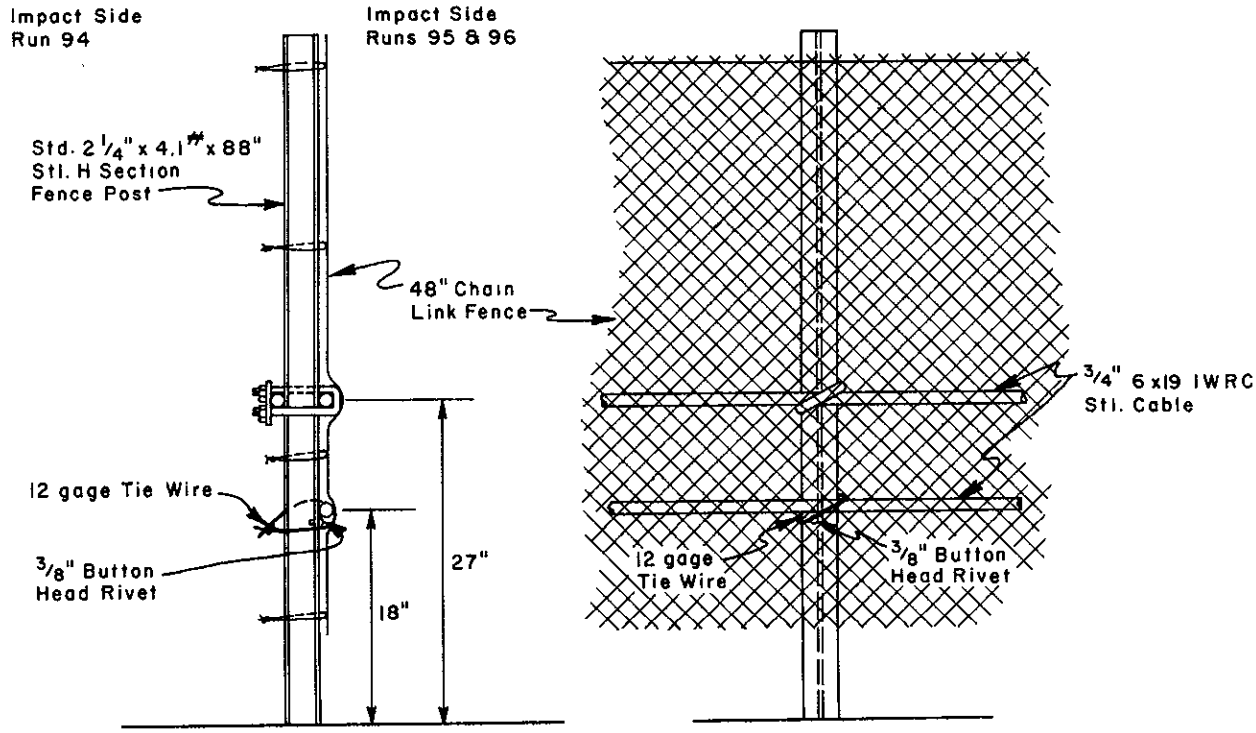

BREAK-AWAY CABLE MOUNTING DETAIL FOR RUNS 94, 95 & 96

Fig. 5

The complete performance for Test No. 94 is outlined on Plates 94-A, B, and C. In this test the lower cable performed properly by breaking away and falling to the ground (Plate 94-C). There was no tendency for the vehicle to climb this barrier as with the previous Test No. 93. The vehicle decelerated smoothly; however, there was a violent spin-out.

The results of Test No. 94 showed that the break-away cable design, as used in that test, was effective when hit from a surface representing the high side of the sawtooth. The next test was therefore conducted to determine the effectiveness of this design in retaining vehicles hitting from the low side of the sawtooth.

It was felt that the test conditions used for the low side impact test (Test No. 95) should be those that would produce the greatest possibility of penetrating under the barrier. A sports car colliding at a wide angle (25°), was therefore selected as representing the most critical impact conditions for this test.

ClibPDF - www.fastio.com

Of the many variations of sawtooth sections existing throughout the State freeway system, it has been found that the most critical for vehicle penetration are those with the steepest face slope. At a wide angle, a colliding vehicle has no chance to follow the abrupt change of grade due to the inability of the front suspension to immediately recover from the wheel recession. Figure 6 shows the operational field design selected as the simulated sawtooth section for Test No. 95. The face slope of this section is approximately 2:1. The difference in elevation is approximately 15 inches. Figure 7 shows the simulated sawtooth section as constructed at the test site. Note that the barrier at the test site was constructed at the top of the slope, the recommended design for sawtooth medians at that time.

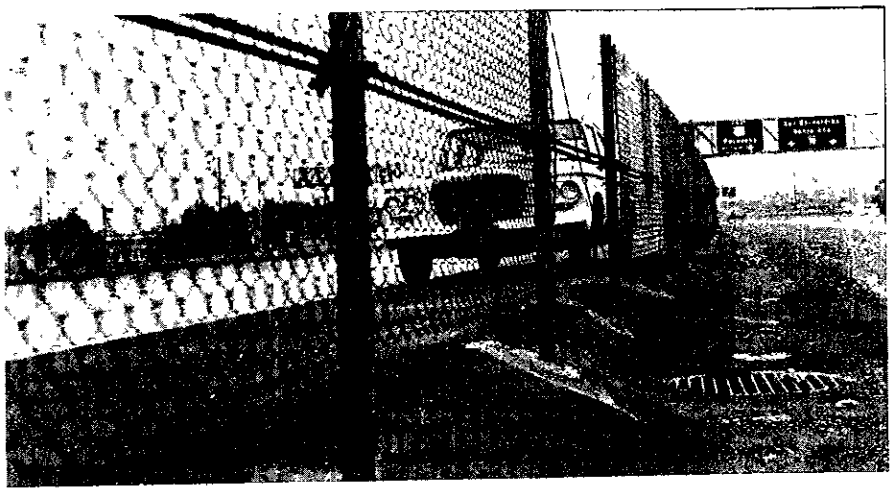

Fig. 6

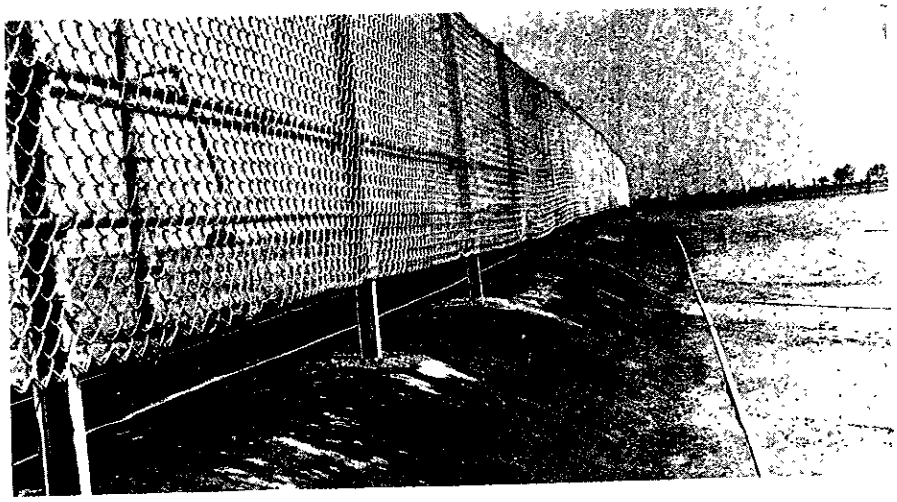

Fig. 7

ClibPDF - www.fastio.com

The complete performance for Test No. 95 is outlined on Plates 95-A, B, and C. The vehicle struck the face of the slope and progressed up and under the top cables. The lower cable snagged on the top of the left front fender as the vehicle progressed through impact and the greater percentage of the impact force was imparted directly to the lower break-away cable. The break-away cable slipped from the anchorage due to a faulty splice 125 ft. ahead of impact and allowed the vehicle to completely penetrate the barrier.

The effectiveness of this break-away cable system in retaining a vehicle impacting from the low side of the sawtooth could not be properly evaluated due to this splice failure.

Therefore Test No. 95 was re-run after modifying the break-away cable anchorage. The complete performance for Test No. 96 (a re-run of Test 95) is outlined on Plates 96-A, B, and C. As in Test No. 95, the vehicle struck the face slope and progressed up and under the cables, including the lower break-away, penetrating the barrier without deviation from its original approach path. Cables were stripped from only one post (see Plate 96-C).

It was concluded from this test that a practical break-away type of cable system could not be designed that would be effective in retaining vehicles striking from both the low and the high side of a sawtooth median. Further efforts in attempting to design a reliable cable barrier for sawtooth medians were abandoned in favor of recommending the placement of a double-blocked out beam median barrier as the best solution for all problem locations on sawtooth or other uneven terrain medians (see Section III. Recommendations).

ClibPDF - www.fastio.com

VI. BARRIER TESTS

The following section includes six groups of plates (Plates 91 through 96) covering all pertinent data and photographs of the six full scale dynamic impact tests. Each group covers the following:

A. A detailed description of the barrier installation, purpose, performance, and barrier damage.

B. A data sheet showing camera views of vehicle through impact and a tabulation of test parameters.

C. Detailed photographs of barrier and vehicle damage.

Also included is Plate 90, the current California Standard Plan for the Cable-Chain Link Median Barrier. Reference is made to this standard plan in describing the various test installations.

ClibPDF - www.fastio.com

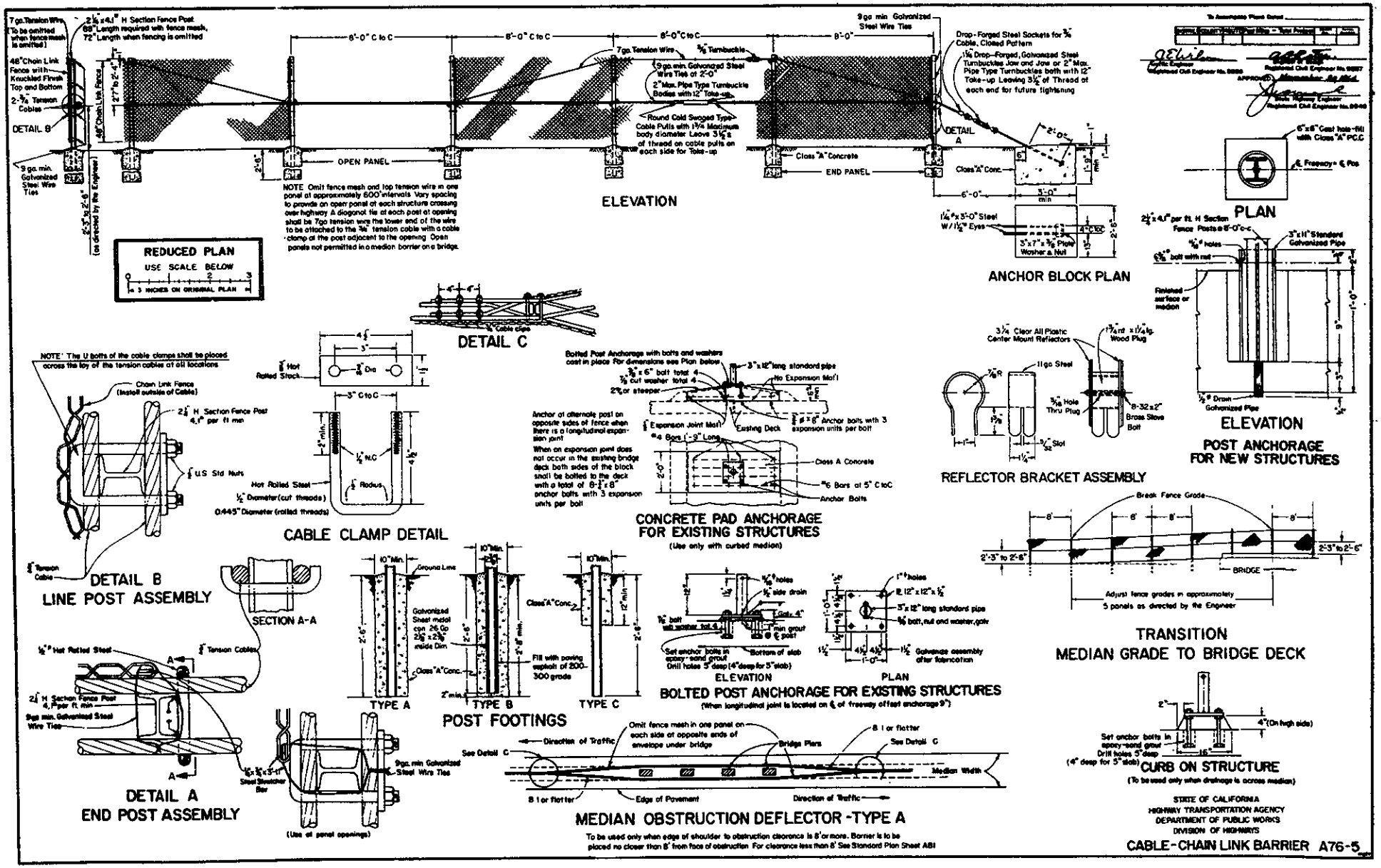

PLATE 90

ClibPDF - www.fastio.com

PLATE 91-A

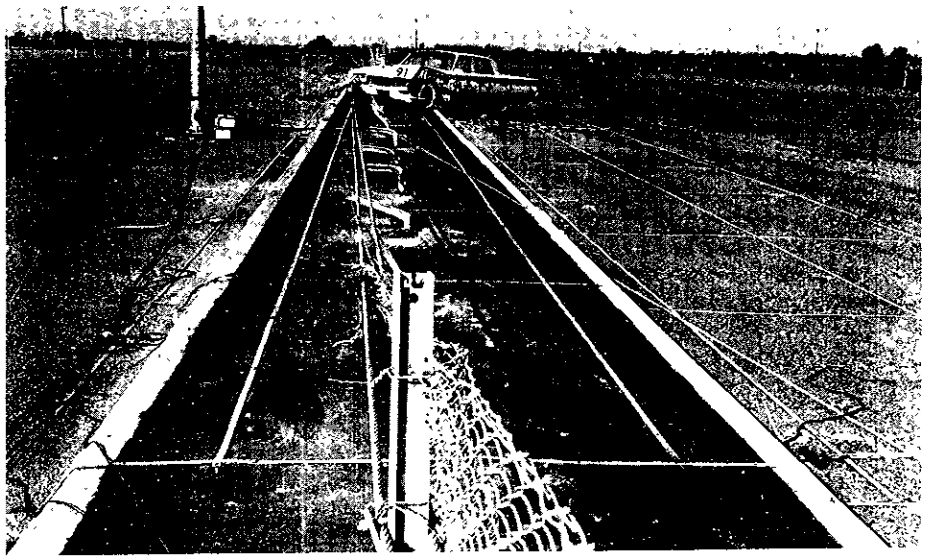

FABRIC: Chain link on impact side of barrier.

CABLES: Two @ 26 in. above surface of raised median.

CABLE ANCHOR: Standard anchor block at each end.

CABLE TURNBUCKLE: Standard pipe type turnbuckle at 48 ft. and 56 ft. beyond point of impact.

TENSION WIRE: Standard.

POST: Standard.

POST FOOTING: Type B.

PURPOSE: To test the effectiveness of the current California standard cable-chain link barrier design with the cable height reduced to 26 in. above the median surface when placed on a 6 in. high by 72 in. wide raised median w/class B curb and subjected to a flat angle collision.

PERFORMANCE: The test vehicle struck the curb and jumped, presenting a front end profile height 2 in. higher than normal on impact with the barrier. This additional height caused the left front tire to partially climb the cables, nearly resulting in the test vehicle vaulting the barrier. The test vehicle was entrapped by the cables and decelerated smoothly to a stop after a 130 deg. spin to the right at 94 ft. beyond impact. The test vehicle was rolling slightly to the right and yawing to the left when it started its spin and was never redirected by the barrier.

MAXIMUM ENCROACHMENT ON TRAVELED SIDE: 13.8 ft.

MAXIMUM ENCROACHMENT ON OPPOSING SIDE: 3.7 ft.

BARRIER DAMAGE: Approximately 96 ft. of mesh was damaged. The mesh separated and approximately 75 ft. gathered up between the cables at point of entrapment. Twelve posts were bent, eleven beyond repair. No posts were pulled out of footings. Two footings were cracked. There was no cable fitting damage or failure. The cables were frayed slightly.

ClibPDF - www.fastio.com

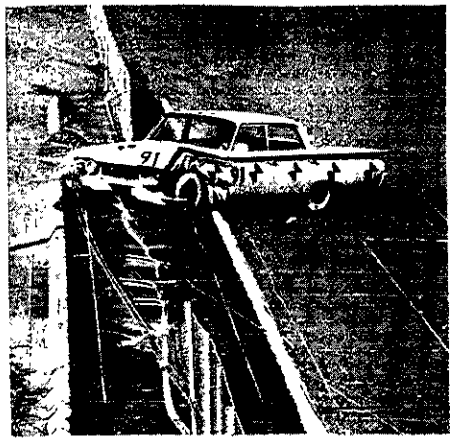

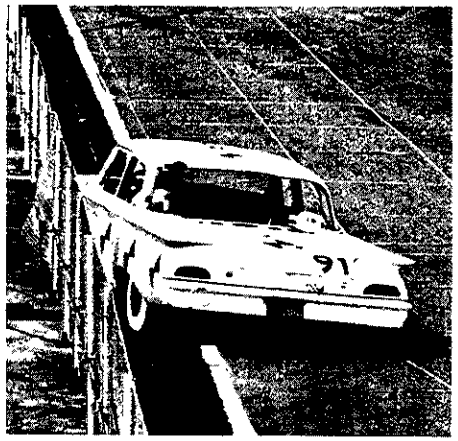

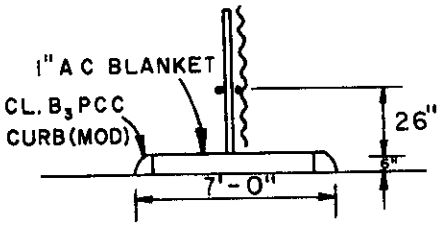

BARRIER CROSS SECTION

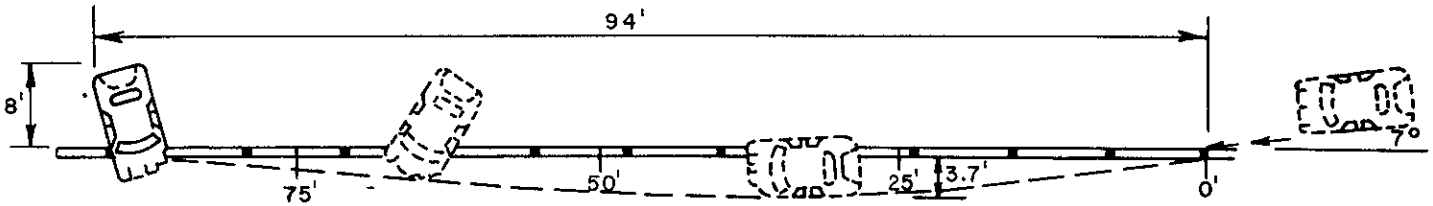

FENCE.....48" Cable Chain link at 9" above pvmt.
CABLE.....3/4" - 6 x 19 IWRC (2 at 26" above pvmt.)
POST....2-1/4" x 4.1# x 88" Stl. H Post
POST FOOTING.....Conc.
POST SPACING.....8' o.c.
LENGTH OF INSTALLATION.....225'
GROUND CONDITION.....Dry
FENCE DAMAGE.....96'

CABLE FITTING DAMAGE.....None
CABLE DAMAGE.....Slight fraying
POST DAMAGE.....12 bent, 11 beyond repair
POST FOOTING DAMAGE.....2 cracked
MAX. DEFLECTION OF CABLES.....3.7'
DUMMY DECELERATION (PEAK LONG).....3.7 g's
(PEAK LAT.).....3.5 g's
(PEAK VERT.)....2.5 g's
VEHICLE DAMAGE.....$ 450

TEST NO.....91
DATE.....1-9-64
VEHICLE.....1960 FORD Sedan
SPEED.....67 mph
IMPACT ANGLE.....7°
VEHICLE WEIGHT.....4138#
(WITH DUMMY & INSTRUMENTATION)

PLATE 91-B

ClibPDF - www.fastio.com

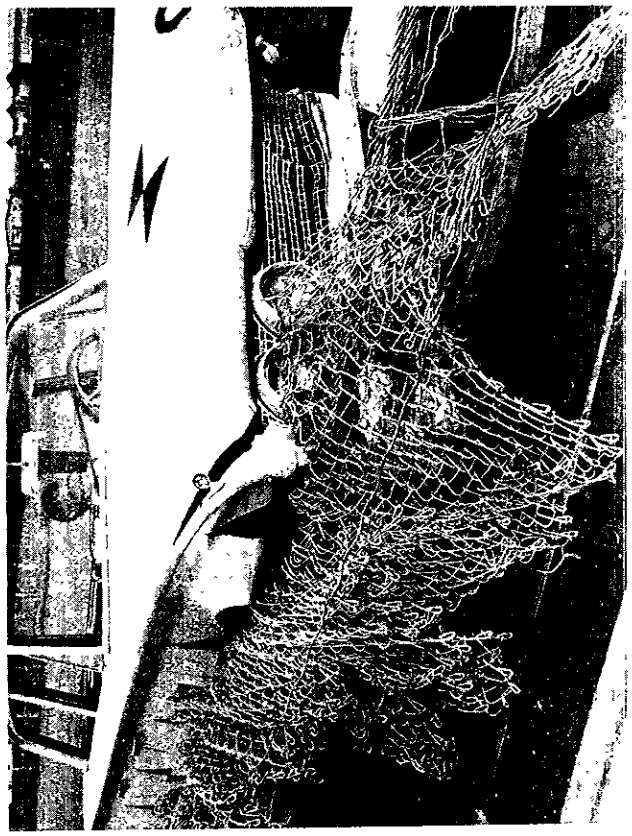

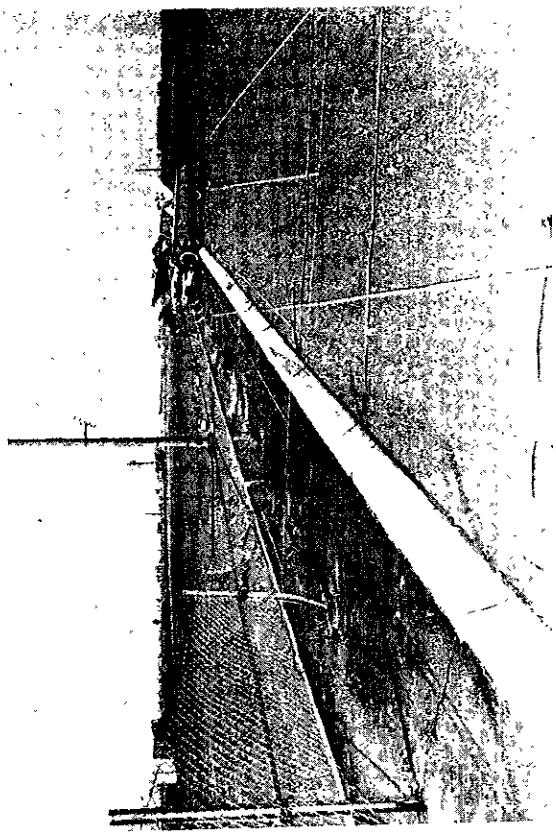

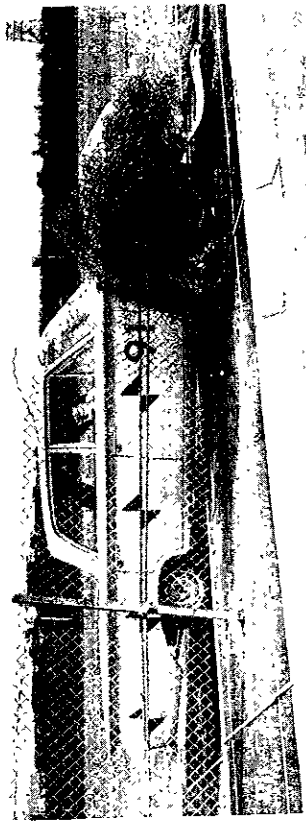

ClibPDF - www.fastio.com

PLATE 92-A

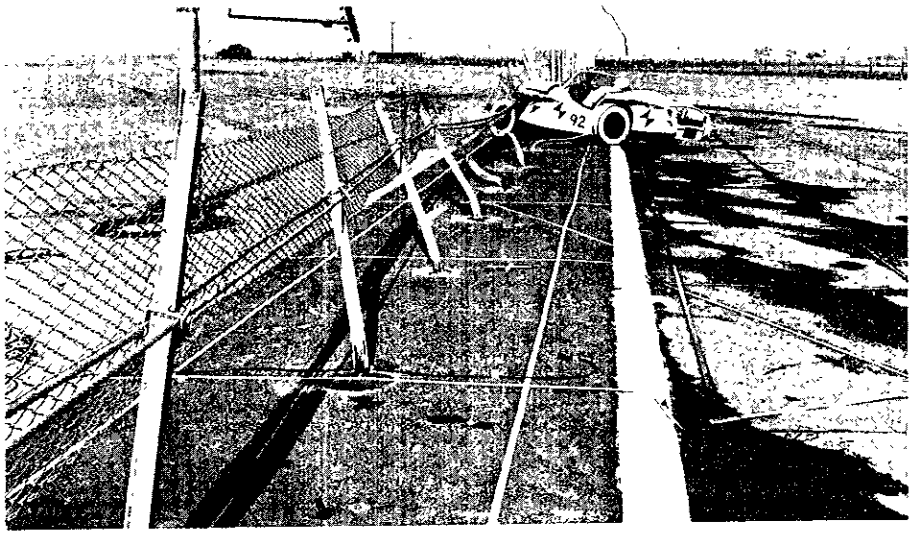

FABRIC: Chain link on side opposite to impact.

CABLES: Two @ 26 in. above surface of raised median.

CABLE ANCHOR: Standard anchor block at each end.

CABLE TURNBUCKLE: Standard pipe type turnbuckle at 16 ft. and 24 ft. beyond point of impact.

TENSION WIRE: Standard.

POST: Standard.

POST FOOTING: Type B.

PURPOSE: Same as Test No. 91 except using a small sports car in place of the standard size vehicle and impacting at a wide angle.

PERFORMANCE: The test vehicle struck the curb which did not significantly alter its original direction and attitude. The test vehicle was entrapped by the cables and decelerated rapidly to a stop after an 80 deg. spin to the right at 35 ft. beyond impact. The test vehicle had no tendency to roll and was being redirected smoothly by the barrier when it started its spin.

MAXIMUM ENCROACHMENT ON TRAVELED SIDE: 7.5 ft.

MAXIMUM ENCROACHMENT ON OPPOSING SIDE: 7.0 ft.

BARRIER DAMAGE: Approximately 80 ft. of mesh was damaged. No mesh separated. Ten posts were bent, seven beyond repair. No posts were pulled out of footings. Two footings were cracked. There was no cable fitting damage or failure. The cables were frayed slightly.

ClibPDF - www.fastio.com

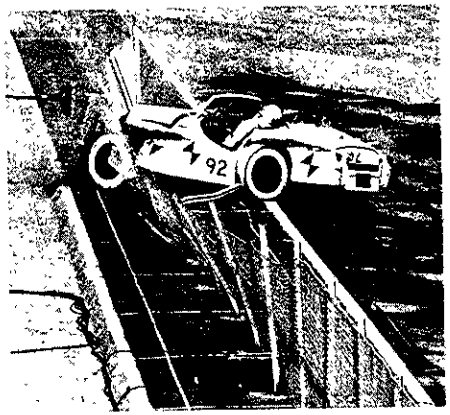

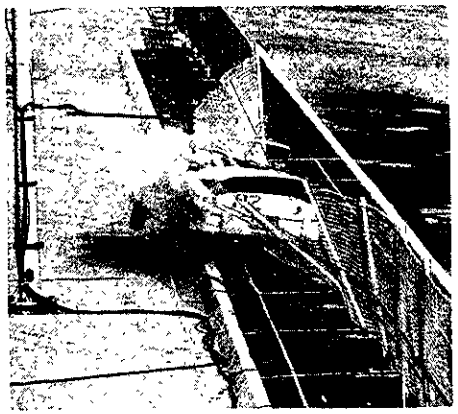

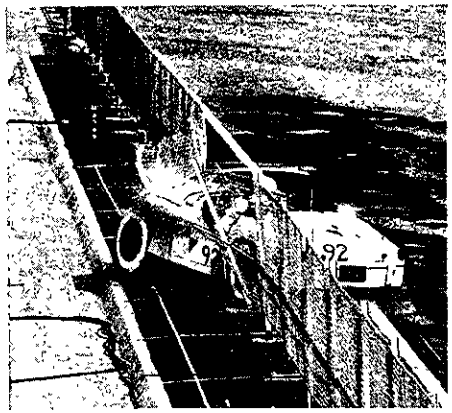

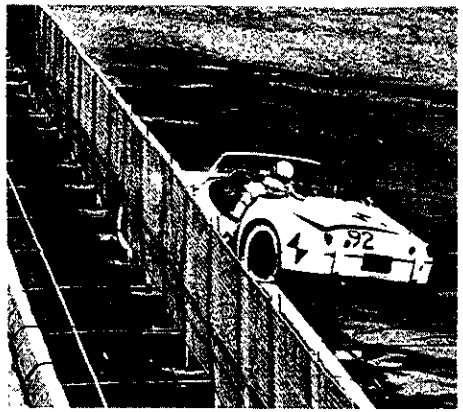

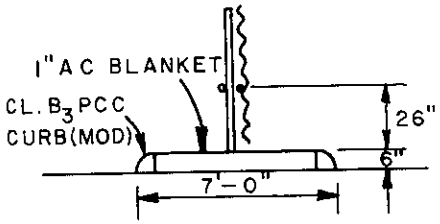

BARRIER CROSS SECTION

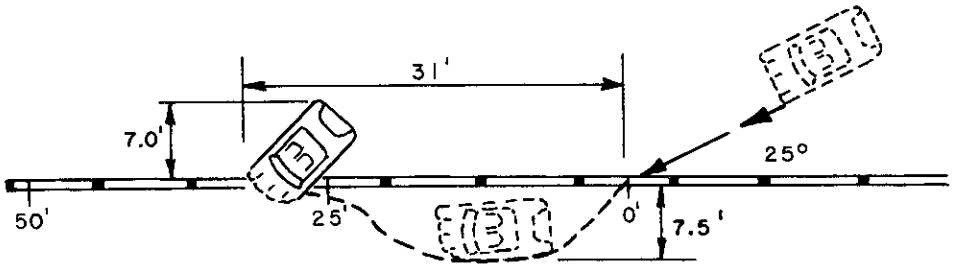

FENCE.....48" Cable Chain link at 9" above pvmt.
CABLE.....3/4" – 6 x 19 IWRC (2 at 26" above pvmt.)
POST...2-1/4" x 4.1 x 88" Stl H Post
POST FOOTING.....Conc.
POST SPACING.....8' o.c.
LENGTH OF INSTALLATION.....200'
GROUND CONDITION.....Dry
FENCE DAMAGE.....80'

CABLE FITTING DAMAGE.....None
CABLE DAMAGE.....Slight fraying
POST DAMAGE.....10 bent, 7 beyond repair
POST FOOTING DAMAGE.....2 cracked
MAX. DEFLECTION OF CABLES.....7.5'
DUMMY DECELERATION (PEAK LONG)....7.5 g's
(PEAK LAT.)....7.0 g's
(PEAK VERT.)..6.5 g's
VEHICLE DAMAGE.....TOTAL

TEST NO.....92
DATE.....2-4-64
VEHICLE.....1958 TRIUMPH
SPEED.....67 mph
IMPACT ANGLE.....25°
VEHICLE WEIGHT.....2540#
(WITH DUMMY & INSTRUMENTATION)

ClibPDF - www.fastio.com

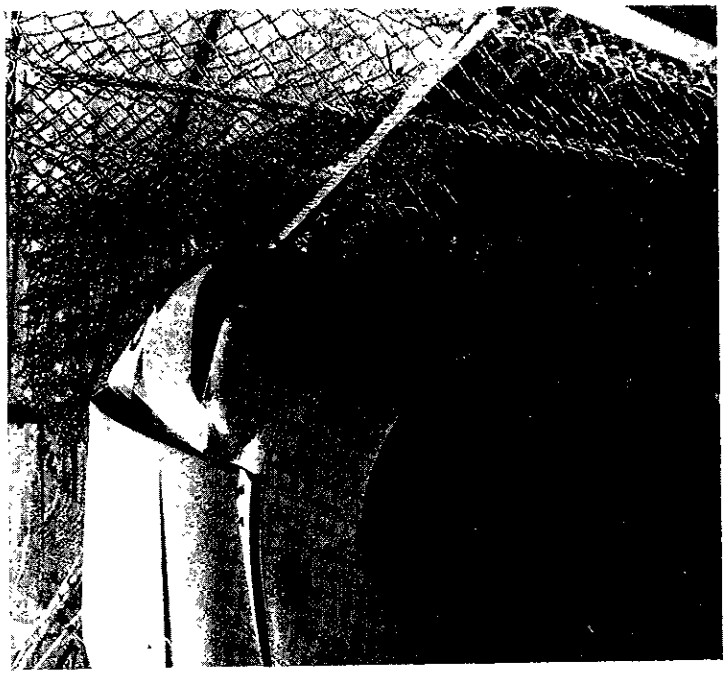

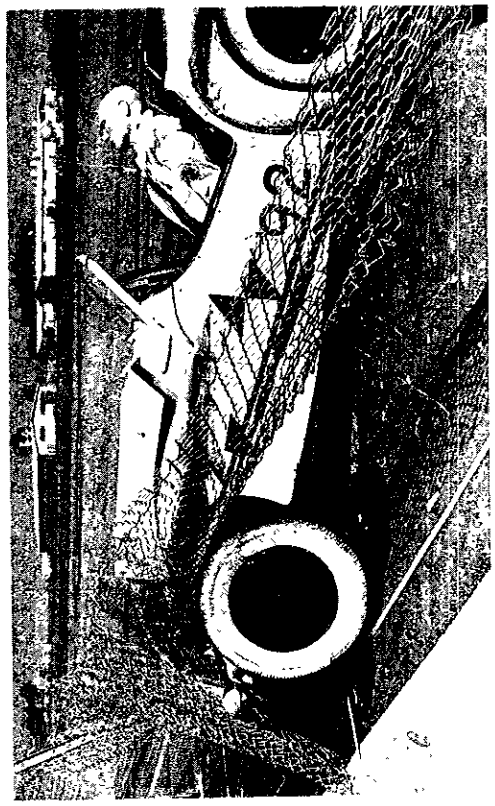

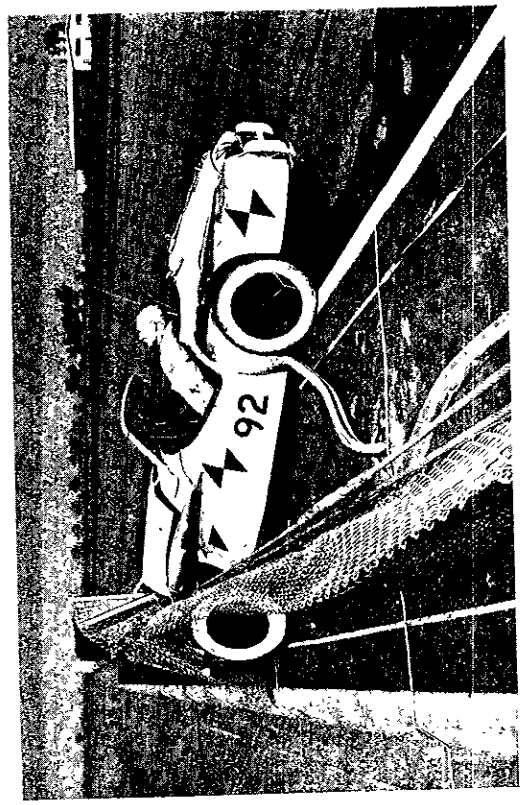

ClibPDF - www.fastio.com

PLATE 93-A

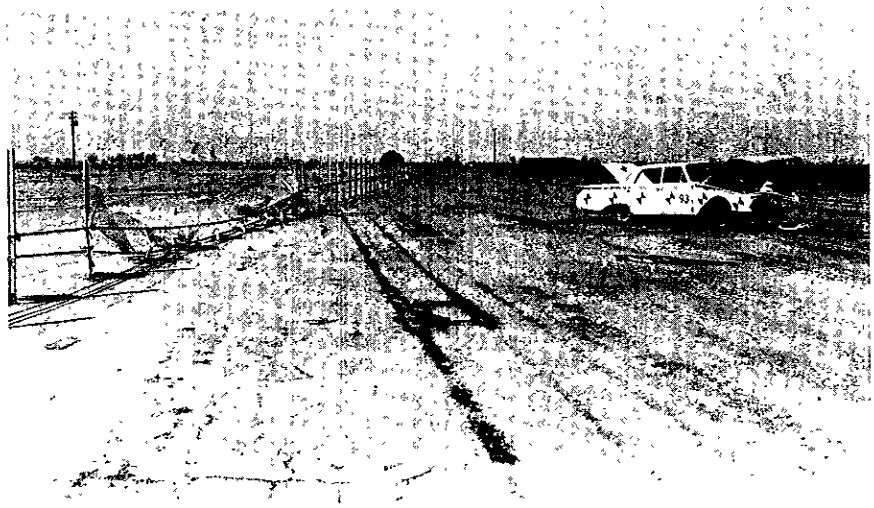

FABRIC: Chain link on side opposite to impact.

CABLES: Two @ 26 in. above pavement. One @ 18 in. above pavement on side opposite to impact.

TOP CABLE ANCHOR: Standard anchor block at each end.

LOWER CABLE ANCHOR: Secured to top cable w/4 cable clips @ each end.

CABLE TURNBUCKLE: Standard pipe type turnbuckle at 115 ft. beyond point of impact. None on lower cable.

TENSION WIRE: Standard.

POST: Standard.

POST FOOTING: Type B.

PURPOSE: To simulate a flat angle collision from the high side of a sawtooth median in order to test the effectiveness of reducing the cable height to 26 in. and adding a break-away cable system placed 18 in. above pavement. See Figure 4 on page 14.

PERFORMANCE: The test vehicle struck the barrier and wedged between the upper and lower cables due to failure of the break-away cable to function as planned. This resulted in rapid deceleration to a violent nose stand and 180 deg. spin-out at 56 ft. beyond impact. As the test vehicle spun out, it rolled onto its right side, skidded to the left, and rolled back into an upright position coming to a stop clear of the barrier at 32 ft. beyond impact. The test vehicle was never redirected by the barrier.

MAXIMUM ENCROACHMENT ON TRAVELED SIDE: 35.0 ft.

MAXIMUM ENCROACHMENT ON OPPOSING SIDE: 4.5 ft.

BARRIER DAMAGE: Approximately 80 ft. of mesh separated and approximately 48 ft. gathered up between the cables at point of spin-out. Nine posts were bent, seven beyond repair. No posts were pulled out of footings. Four footings were cracked. Three U-bolts on the lower cable sheared. The cables were frayed slightly.

ClibPDF - www.fastio.com

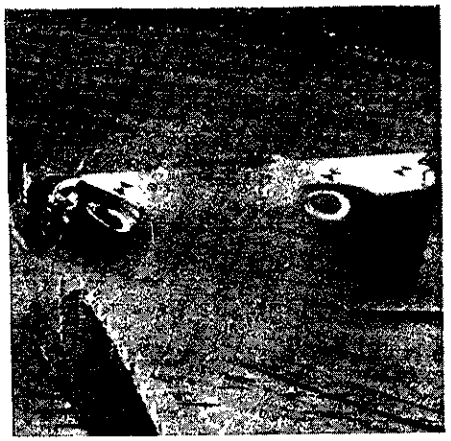

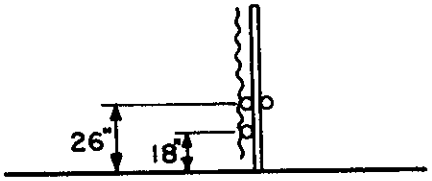

BARRIER CROSS SECTION

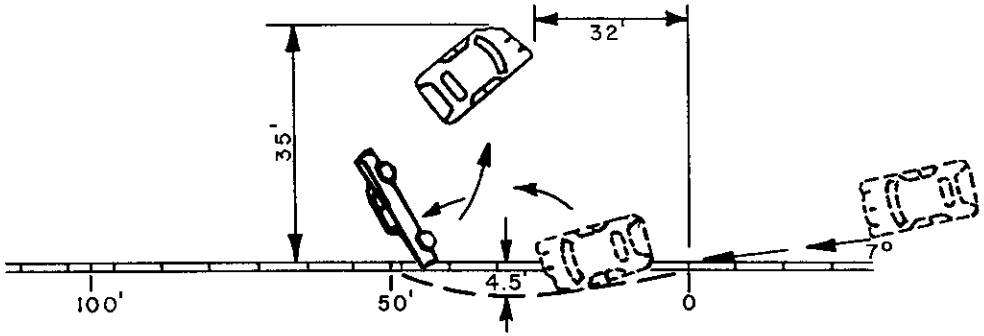

FENCE.....48" Cable Chain link at 8" above pvmt.
CABLE.....3/4" – 6 x 19 IWRC (2 at 26" & 1 at 18" above pvmt.
POST....2-1/4" x 4.1# x 88" Stl. H Post
POST FOOTING.....Conc.
POST SPACING.....8' o. c.
LENGTH OF INSTALLATION.....600'
GROUND CONDITION.....Dry
FENCE DAMAGE.....80'

CABLE FITTING DAMAGE.....3 U bolts sheared
CABLE DAMAGE.....Slight fraying
POST DAMAGE.....9 bent, 7 beyond repair
POST FOOTING DAMAGE.....4 cracked
MAX DEFLECTION OF CABLES.....4.5'
DUMMY DECELERATION (PEAK LONG) 4.5 g's
(PEAK LAT.) 3.0 g's
(PEAK VERT.) 4.0 g's
VEHICLE DAMAGE.....TOTAL

TEST NO.....93
DATE.....2-26-64
VEHICLE.....1960 FORD Sedan
SPEED.....65 mph
IMPACT ANGLE.....7°
VEHICLE WEIGHT (WITH DUMMY & INSTRUMENTATION) 4138#

ClibPDF - www.fastio.com

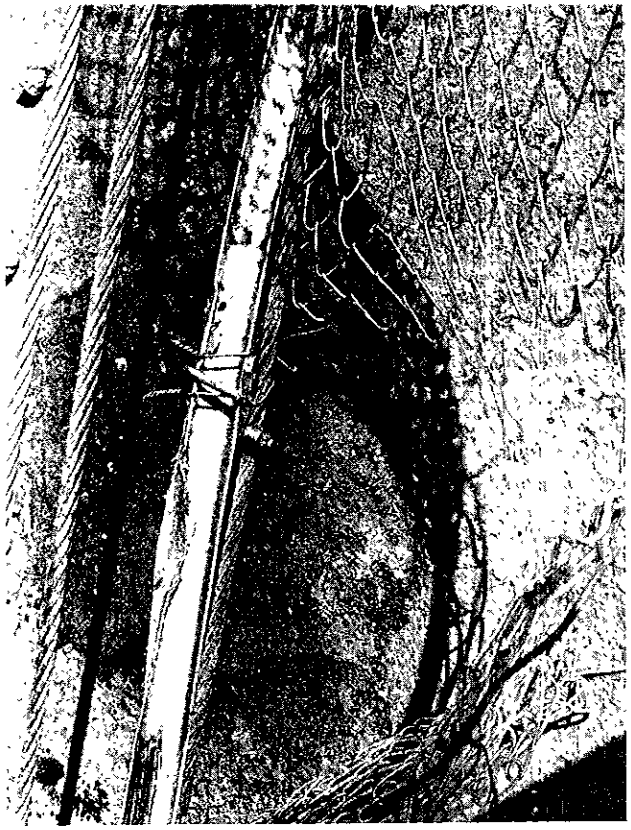

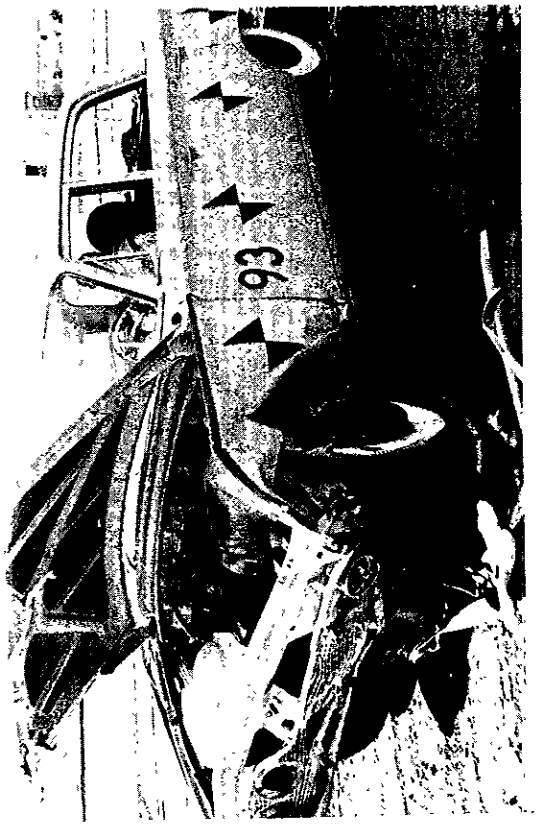

ClibPDF - www.fastio.com

PLATE 94-A

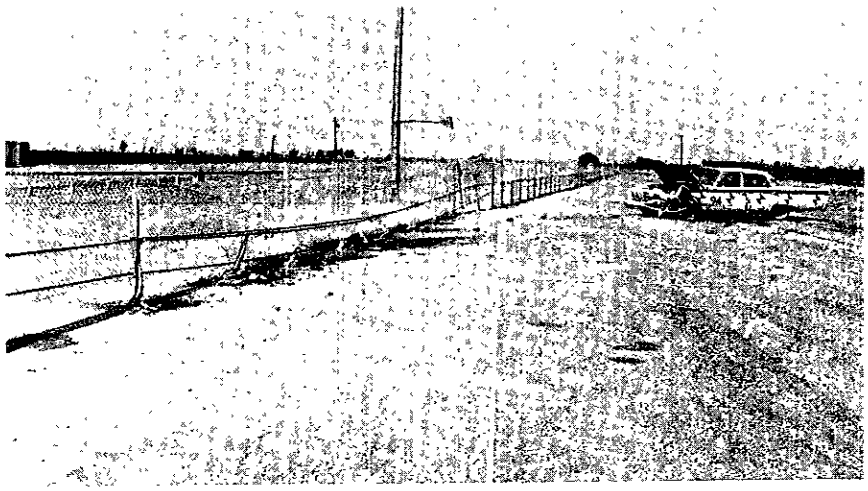

FABRIC: Chain link on side opposite to impact.

CABLES: Two @ 27 in. above pavement. One @ 18 in. above pavement on side opposite to impact.

TOP CABLE ANCHOR: Standard anchor block at each end.

LOWER CABLE ANCHOR: Secured to top cable w/4 cable clips at each end.

CABLE TURNBUCKLE: Standard pipe type turnbuckle at 215 ft. beyond point of impact. None on lower cable.

TENSION WIRE: Standard.

POST: Standard.

POST FOOTING: Type B.

PURPOSE: Same as Test No. 93 except with a redesigned break-away cable system. See Figure 5 on page 16.

PERFORMANCE: The test vehicle struck the barrier and decelerated smoothly to a violent 180 deg. spin-out at 63 ft. beyond impact and came to a stop clear of the barrier at 98 ft. beyond impact. The test vehicle was yawing to the left when it started its spin-out and was never redirected by the barrier. The break-away cable system functioned as planned, and there was no tendency for the test vehicle to climb the barrier.

MAXIMUM ENCROACHMENT ON TRAVELED SIDE: 30 ft.

MAXIMUM ENCROACHMENT ON OPPOSING SIDE: 3 ft.

BARRIER DAMAGE: Approximately 80 ft. of mesh was damaged. No mesh separated. Sixteen posts were bent, nine beyond repair. No posts were pulled out of footings. Six footings were broken and six were cracked. There was no cable fitting damage or failure. The cables were slightly frayed.

ClibPDF - www.fastio.com

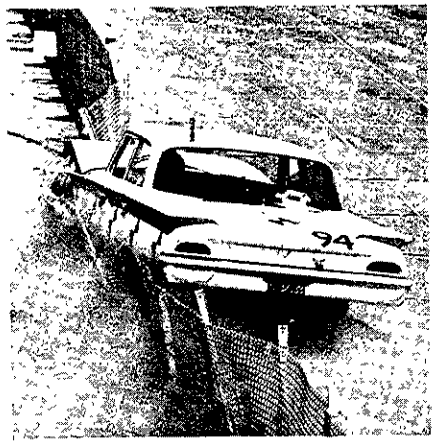

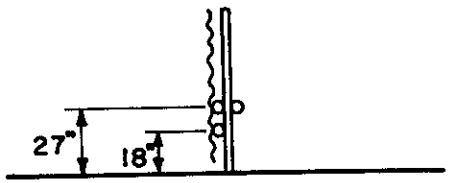

BARRIER CROSS SECTION

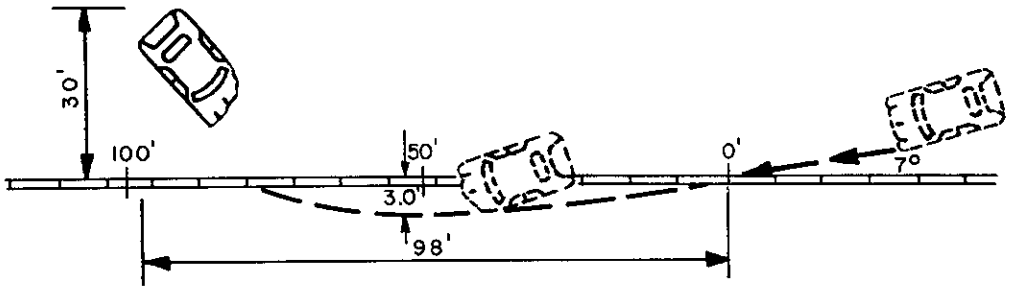

FENCE.....48" Cable chain link at 9" above pvmt.
CABLE.....3/4" – 6 x 19 IWRC (2 at 27" & 1 at 18")
POST.....2-1/4" 4.1# x 88" Stl. H Post
POST FOOTING.....Conc.
POST SPACING.....8' o.c.
LENGTH OF INSTALLATION.....600'
GROUND CONDITION.....Dry
FENCE DAMAGE.....80'

CABLE FITTING DAMAGE.....None
CABLE DAMAGE.....Slight fraying
POST DAMAGE.....16 bent, 9 beyond repair
POST FOOTING DAMAGE.....6 broken 6 cracked
MAX. DEFLECTION OF CABLES.....3.5'
DUMMY DECELERATION (PEAK LONG).....3.5g's
(PEAK LAT.).....3.7g's
(PEAK VERT) 2.0g's
VEHICLE DAMAGE.....TOTAL

TEST NO.....94
DATE.....3-18-64
VEHICLE.....1960 FORD Sedan
SPEED.....60 mph
IMPACT ANGLE.....7°
VEHICLE WEIGHT.....4138#
(WITH DUMMY & INSTRUMENTATION)

ClibPDF - www.fastio.com

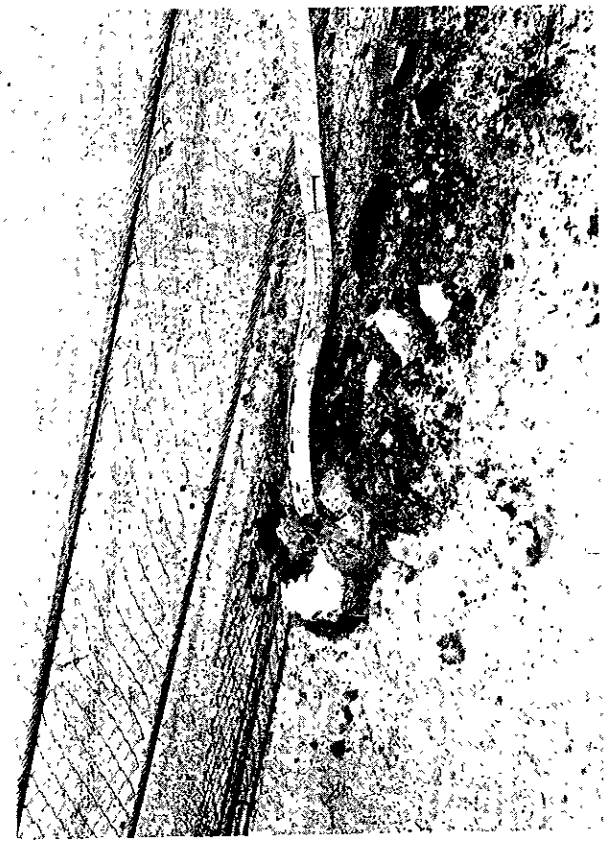

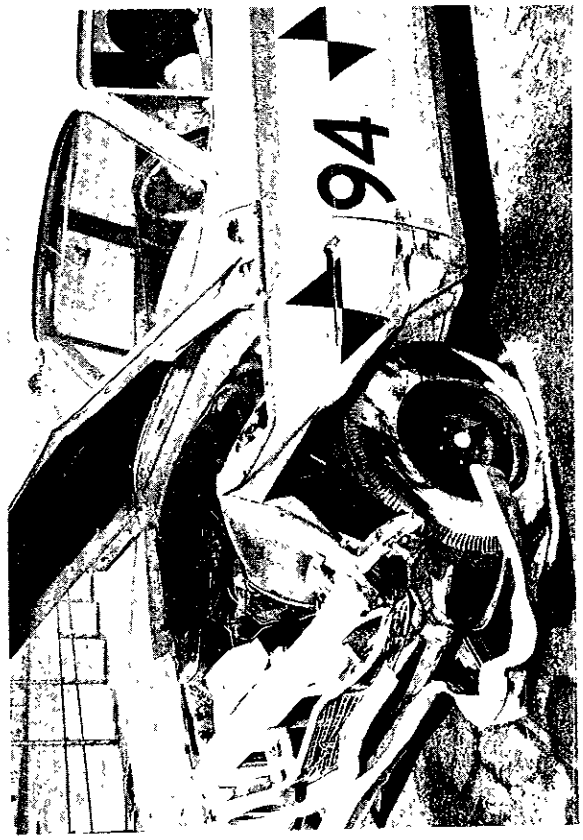

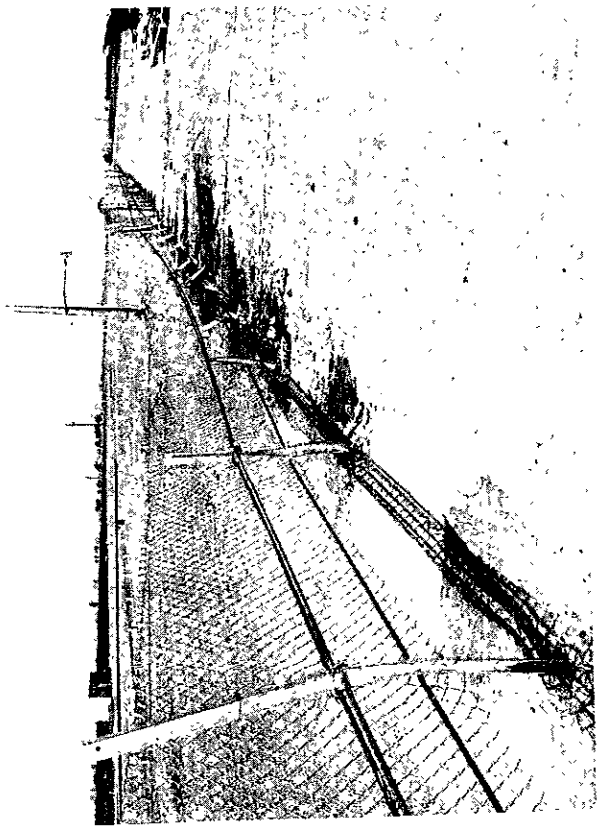

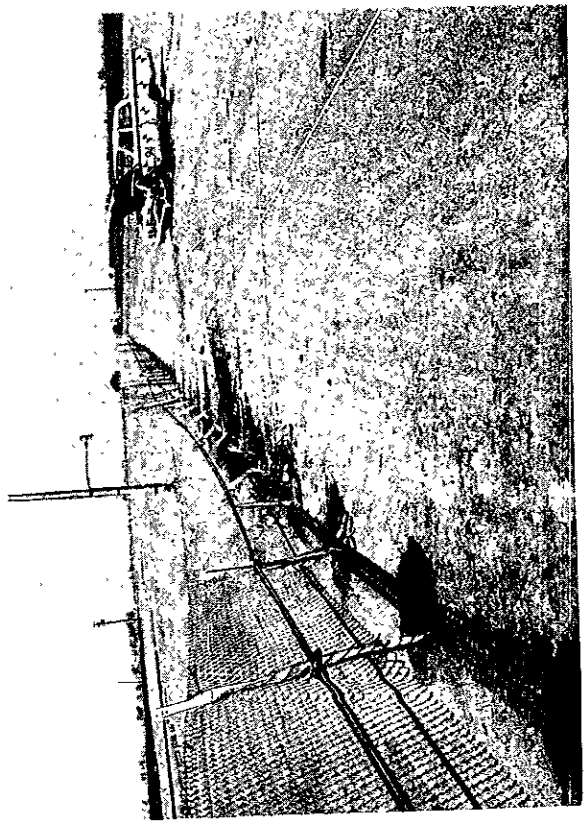

ClibPDF - www.fastio.com

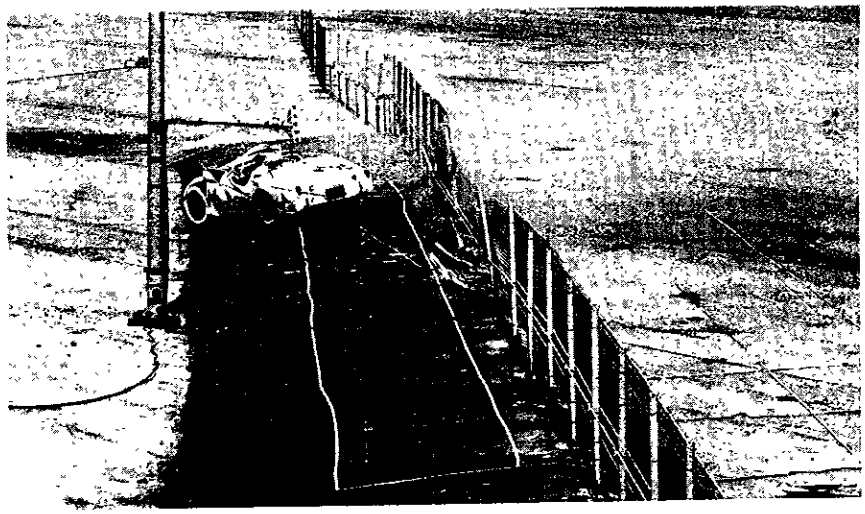

FABRIC: Chain link on impact side.

CABLES: Two @ 27 in. above pavement. One @ 18 in. above pavement on impact side of barrier.

TOP CABLE ANCHOR: Standard anchor block at each end.

LOWER CABLE ANCHOR: Secured to top cable w/4 cable clips at each end.

CABLE TURNBUCKLE: Standard pipe type turnbuckle at 16 ft. and 96 ft. beyond point of impact. None on lower cable.

TENSION WIRE: Standard.

POST: Standard.

POST FOOTING: Type B.

PURPOSE: To simulate a wide angle collision from the low side of a sawtooth median in order to test the effectiveness of the break-away cable system tested in Test No. 94.

PERFORMANCE: The test vehicle was depressed approximately 6 in. by action of the 2:1 slope on the face of the sawtooth. This reduction in front end profile height permitted the test vehicle to nose under the lower cable, forcing it up and allowing the test vehicle to pass under the top cables and penetrate the barrier. The cable clips installed on the lower break-away cable failed to hold under impact loading, permitting the cable to slip as the test vehicle penetrated the barrier. As it progressed through the barrier, the vehicle was violently snubbed to a stop by the lower cable 46 ft. beyond impact.

MAXIMUM ENCROACHMENT ON TRAVELED SIDE: 0 ft.

MAXIMUM ENCROACHMENT ON OPPOSING SIDE: 11.0 ft.

BARRIER DAMAGE: Approximately 35 ft. of mesh was damaged. The mesh separated and approximately 15 ft. gathered up between the top cables at point of penetration. Five posts were bent, two beyond repair. No posts were pulled out of footings. One footing was broken and two were cracked. Four cable clips failed to secure the lower cable. The cables were slightly frayed.

DUMMY INJURIES: Severe upper arm wounds resulting from the bottom cable dragging across the exposed side of the dummy.

ClibPDF - www.fastio.com

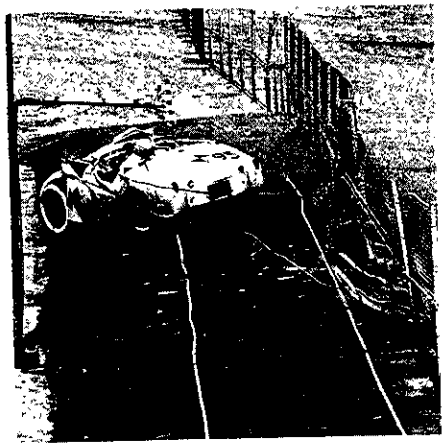

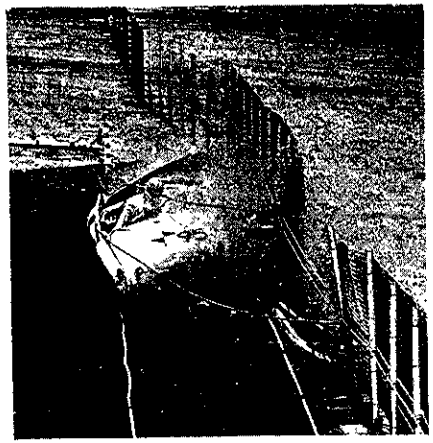

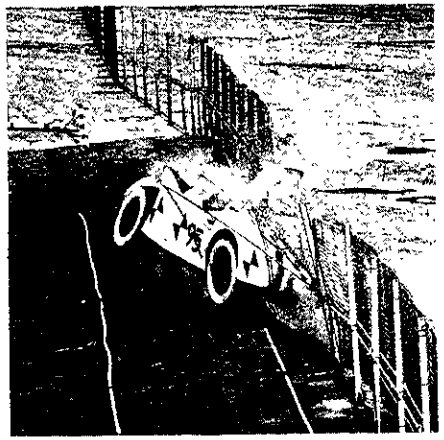

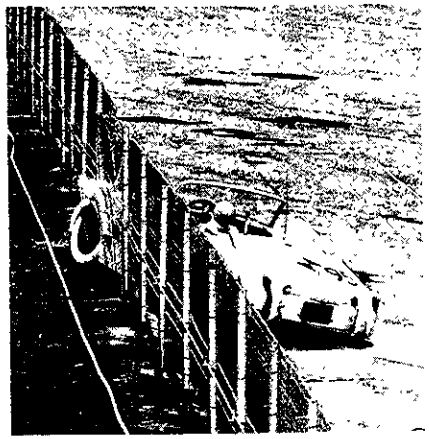

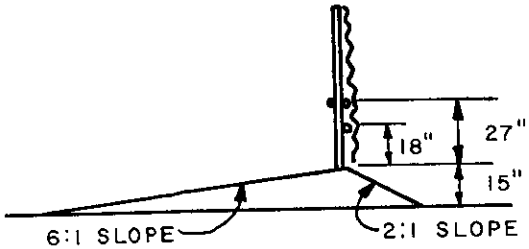

BARRIER CROSS SECTION

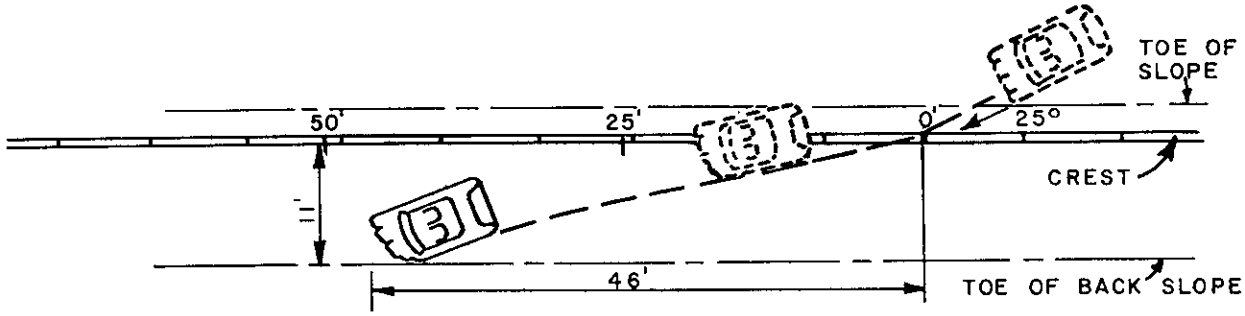

FENCE.....48" Cable Chain link at 9" above pvmt.
CABLE.....3/4" - 6 x 19 IWRC (2 at 27" & 1 at 18")
POST.... 2-1/4" x 4.1# x 88" Stl. H Post
POST FOOTING .... Conc.
POST SPACING..... .....8' o.c.
LENGTH OF INSTALLATION..... ..175'
GROUND CONDITION ..... Dry
FENCE DAMAGE... .... 35'

CABLE FITTING DAMAGE.....None
CABLE DAMAGE.....Slight fraying
POST DAMAGE.....5 bent, 2 beyond repair
POST FOOTING DAMAGE.....1 broken, 2 cracked
MAX. DEFLECTION OF CABLES..... 2.5'
DUMMY DECELERATION (PEAK LONG) 38.0 g's
(PEAK LAT.) 16.5 g's
(PEAK VERT.) 8.5 g's
VEHICLE DAMAGE.....TOTAL

TEST NO..... 95
DATE.....4-22-64
VEHICLE.....1958 TRIUMPH
SPEED..... .....65 mph
IMPACT ANGLE.....25°
VEHICLE WEIGHT.....2540#
(WITH DUMMY & INSTRUMENTATION)

ClibPDF - www.fastio.com

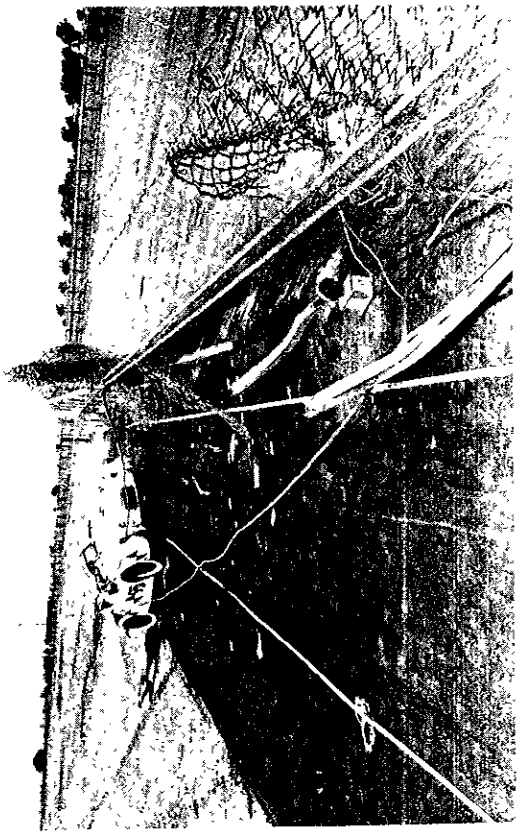

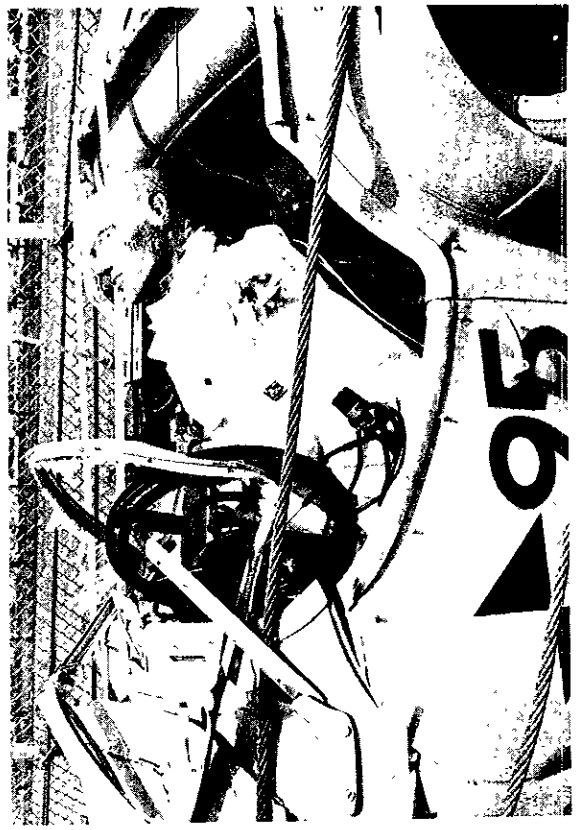

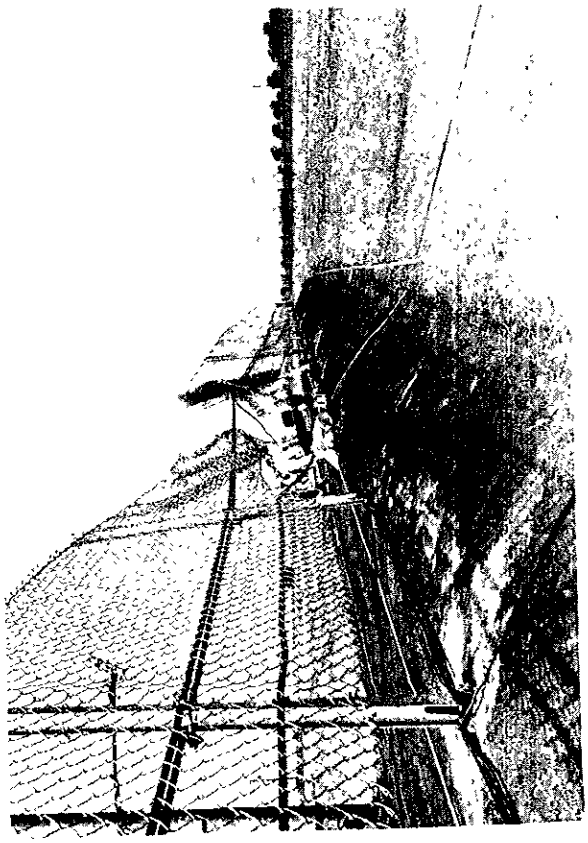

ClibPDF - www.fastio.com

PLATE 96-A

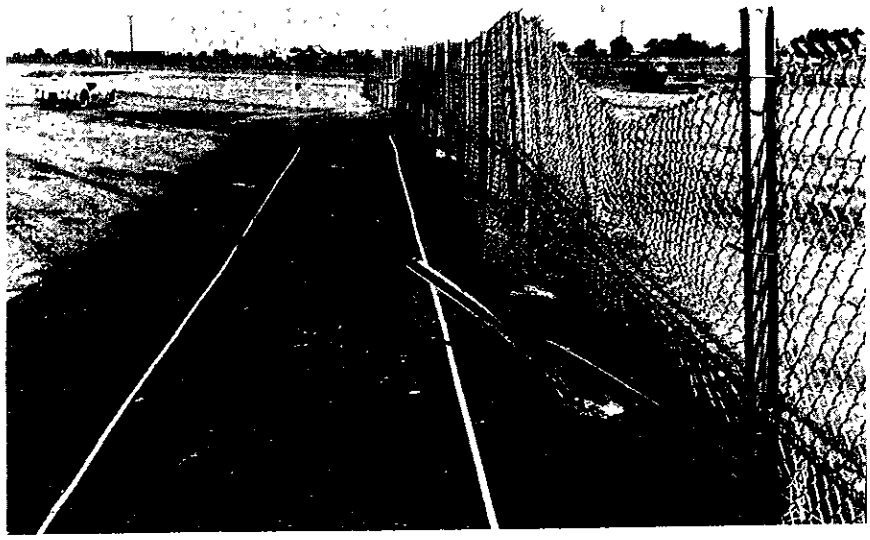

FABRIC: Chain link on impact side.

CABLES: Two @ 27 in. above pavement. One @ 18 in. above pavement on impact side of barrier.

TOP CABLE ANCHOR: Standard anchor block at each end.

LOWER CABLE ANCHOR: Secured to a top cable w/4 cable clips anchored around a barrier post and secured to opposite top cable w/2 additional cable clips.

CABLE TURNBUCKLE: Standard pipe type turnbuckle at 16 ft. and 96 ft. beyond point of impact. None on lower cable.

TENSION WIRE: Standard.

POST: Standard.

POST FOOTING: Type B.

PURPOSE: Same as Test No. 95. Re-run of previous test due to failure of cable clips to secure lower cable.

PERFORMANCE: As in the previous test, the vehicle nosed under the cables and penetrated the barrier. The initial velocity and direction of the test vehicle were not significantly altered by the barrier. After passing under the barrier, the test vehicle catapulted off the sawtooth, being airborne for approximately 45 ft. and came to a stop clear of the barrier at 145 ft. beyond impact.

MAXIMUM ENCROACHMENT ON TRAVELED SIDE: 0 ft.

MAXIMUM ENCROACHMENT ON OPPOSING SIDE: 36.4 ft.

BARRIER DAMAGE: Approximately 16 ft. of mesh was damaged. There was no mesh separation. Four posts were bent, one beyond repair. No posts were pulled out of footings. Two footings were cracked. There was no cable fitting damage or failure. The cables were slightly frayed.

DUMMY INJURIES: Severe neck wound -- possibly resulting in a decapitation of a human driver. The dummy struck the cables with such force that a portion of the cloth was torn from the coveralls and jammed two inches into the lower portion of the neck.

ClibPDF - www.fastio.com

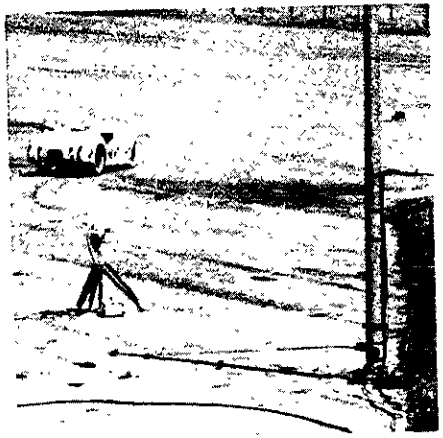

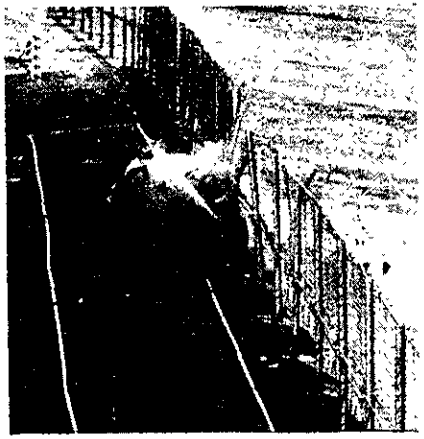

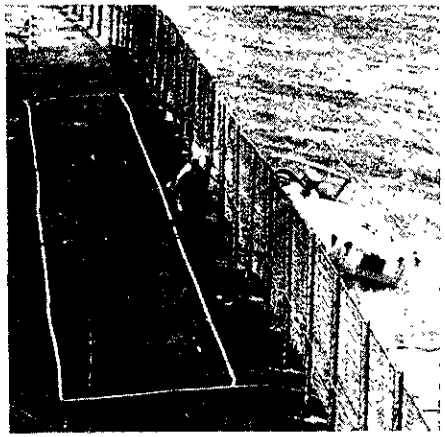

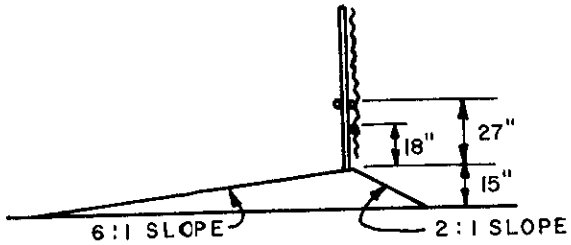

BARRIER CROSS SECTION

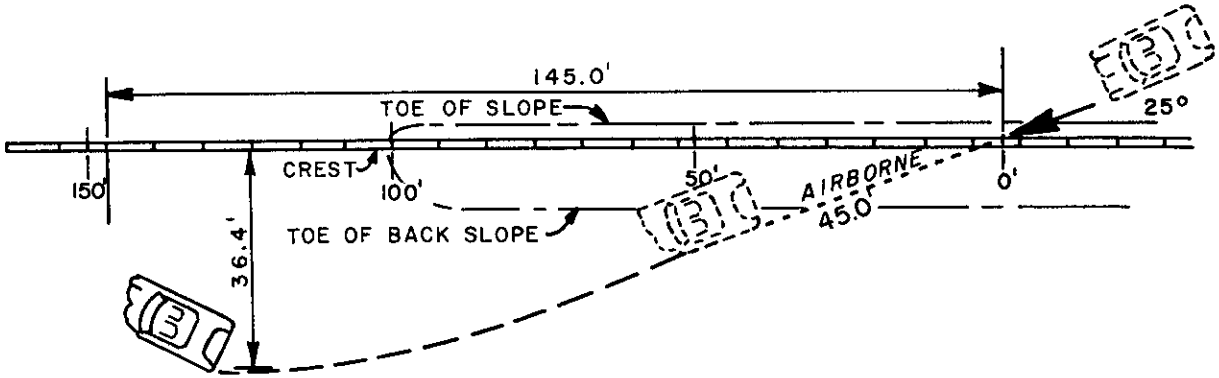

FENCE..... 48" Cable Chain. link 9" above pvmt.
CABLE ..... 3/4"-6 x 19 IWRC (2 at 27" & 1 at 18")
POST.....2-1/4" 4.1# x 88" Stl. H Post
POST FOOTING..... Conc.
POST SPACING..... 8' o. c.
LENGTH OF INSTALLATION.....175'
GROUND CONDITION.....Dry
FENCE DAMAGE..... 16'

CABLE FITTING DAMAGE.....None
CABLE DAMAGE.....Slight fraying
POST DAMAGE.....4 bent, 1 beyond repair
POST FOOTING DAMAGE.....2 cracked
MAX. DEFLECTION OF CABLES..... 2.0
DUMMY DECELERATION (PEAK LONG)...58.0 g's
(PEAK LAT.)....29.5 g's
(PEAK VERT.)..25.0 g's
VEHICLE DAMAGE.....TOTAL

TEST NO..... 96
DATE.....5-7-64
VEHICLE.....1960 TRIUMPH
SPEED..... 63 mph
IMPACT ANGLE.....25°
VEHICLE WEIGHT.....2540#
(WITH DUMMY & INSTRUMENTATION)

ClibPDF - www.fastio.com

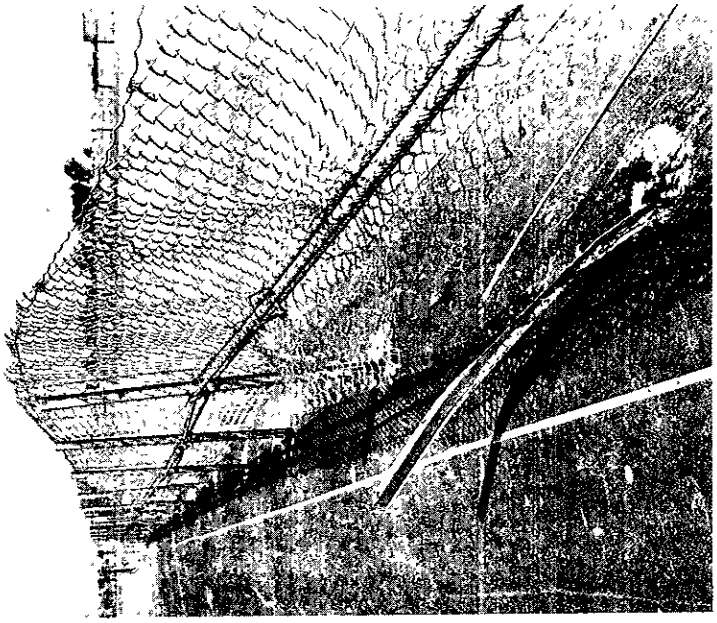

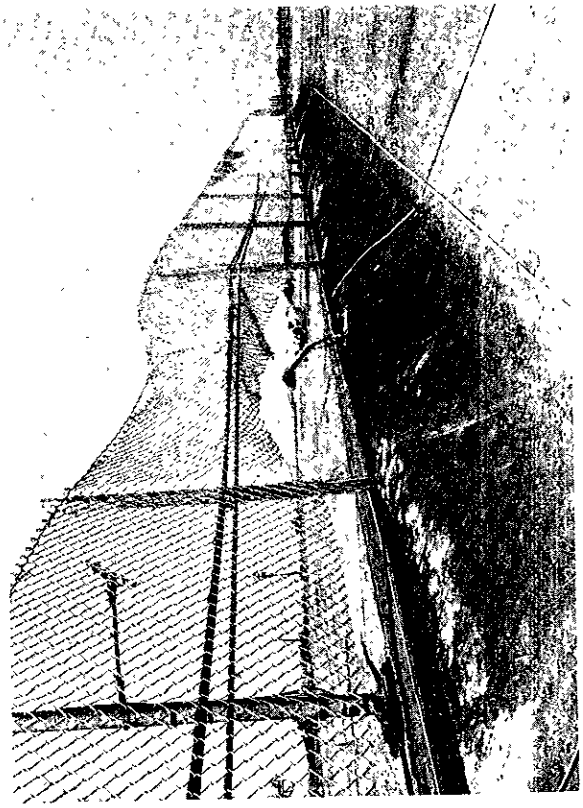

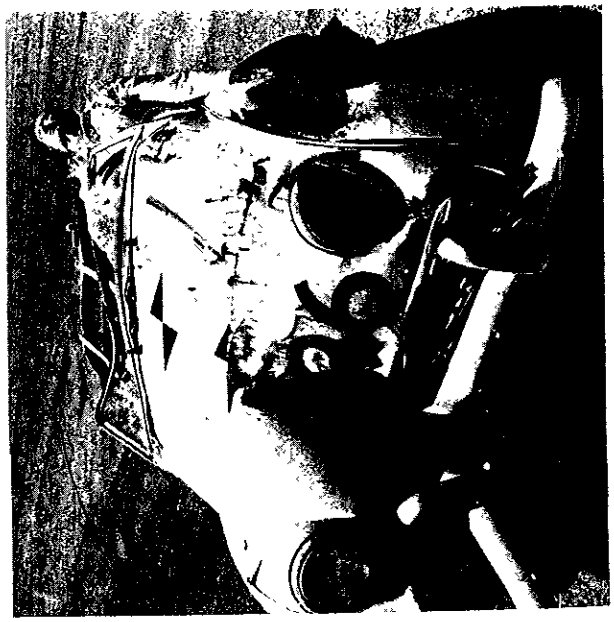

ClibPDF - www.fastio.com

VII. REFERENCES

1. Beaton, J. L. and R. N. Field, "Dynamic Full Scale Tests of Median Barriers", Highway Research Board Bulletin No. 266, 1960.

2. Beaton, J. L., R. N. Field, and K. Moskowitz, "Median Barriers -- One Year's Experience and Further Controlled Full Scale Tests", Highway Research Board Proceedings, Volume 41, 1962.

3. Field, R. N., "Dynamic Full Scale Impact Tests of Cable Type Median Barriers, Test Series VII", 1964.

ClibPDF - www.fastio.com

EXHIBIT 1

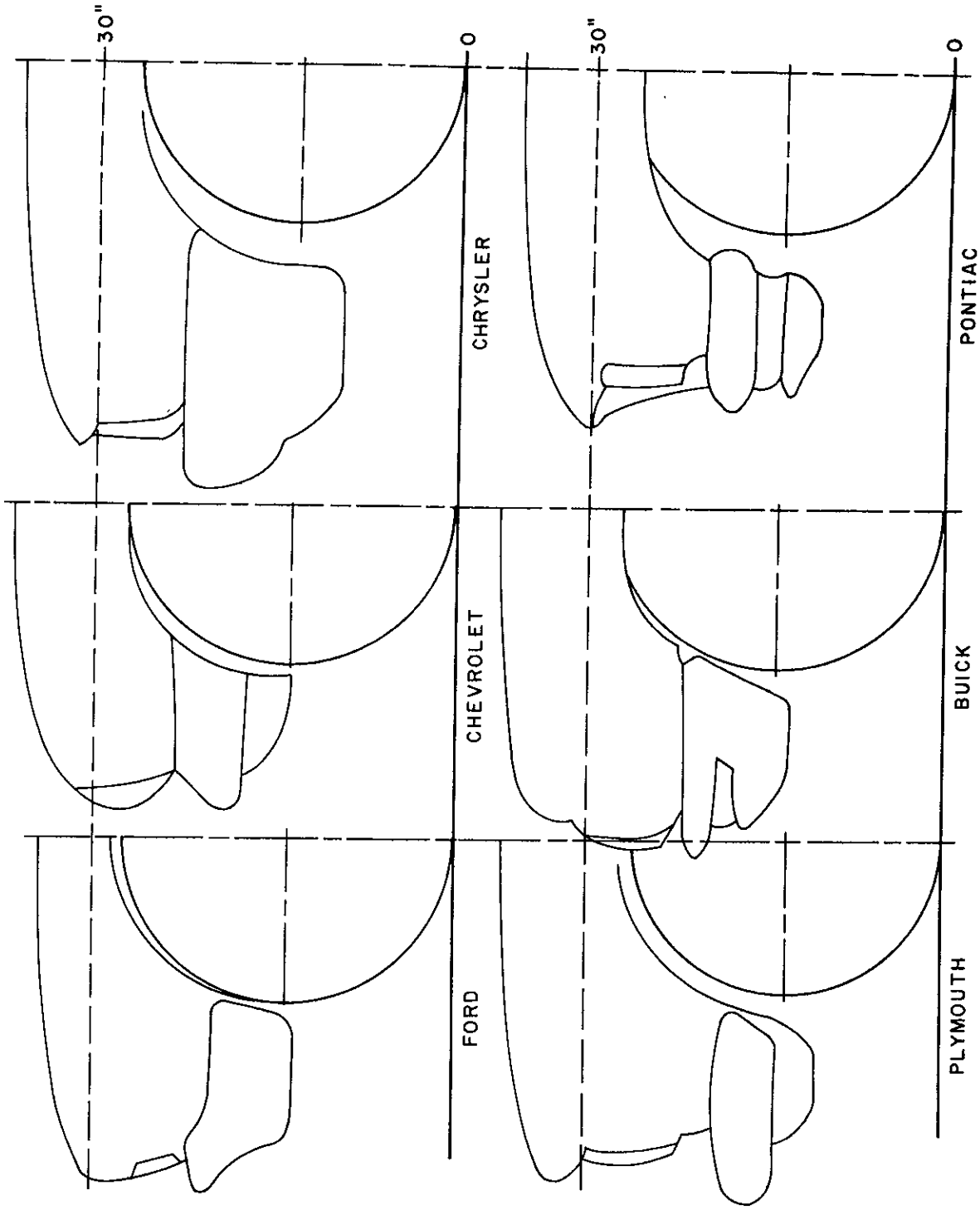

FRONT END PROFILE COMPARISONS OF
VARIOUS DOMESTIC STANDARD SIZE SEDANS

ClibPDF - www.fastio.com

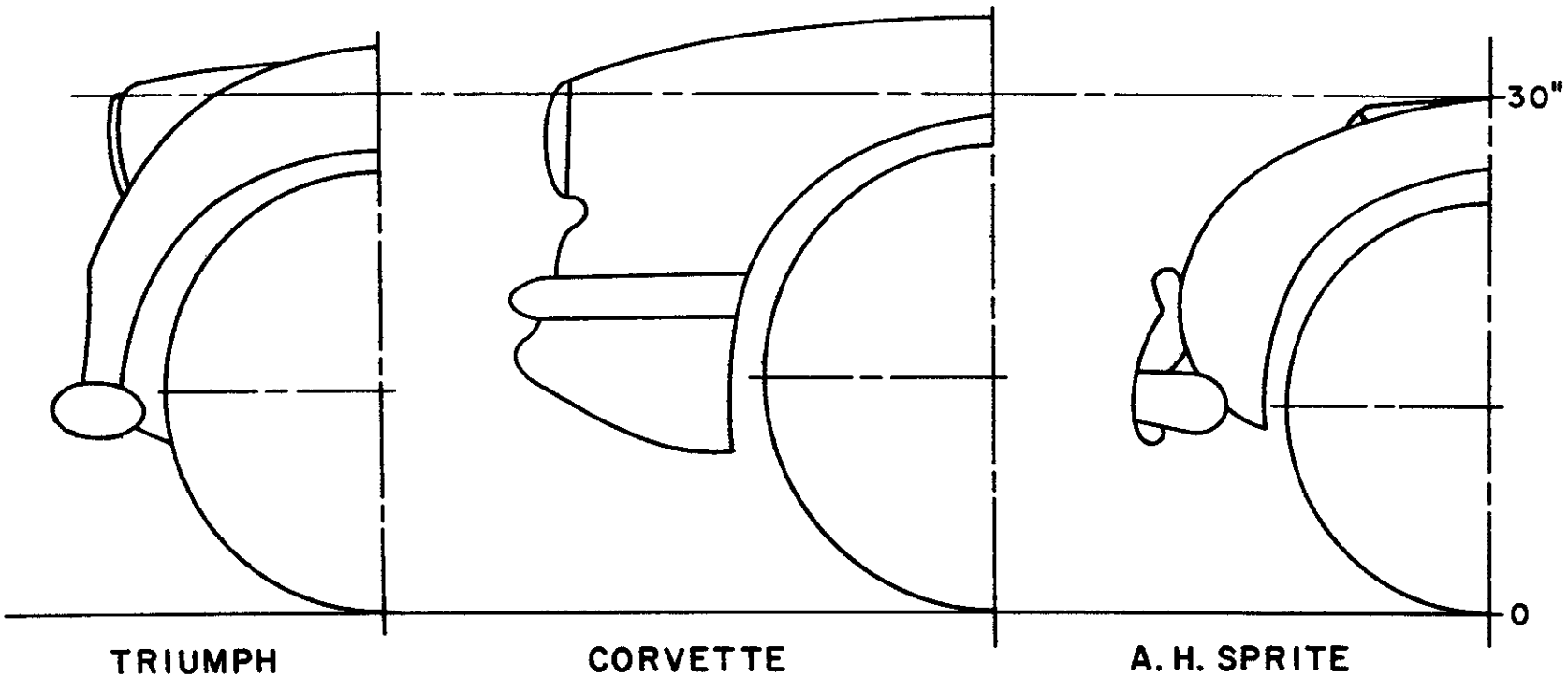

FRONT END PROFILES OF THE THREE TYPES OF SPORTS CARS USED IN THE JUMP TESTS

EXHIBIT 2

ClibPDF - www.fastio.com

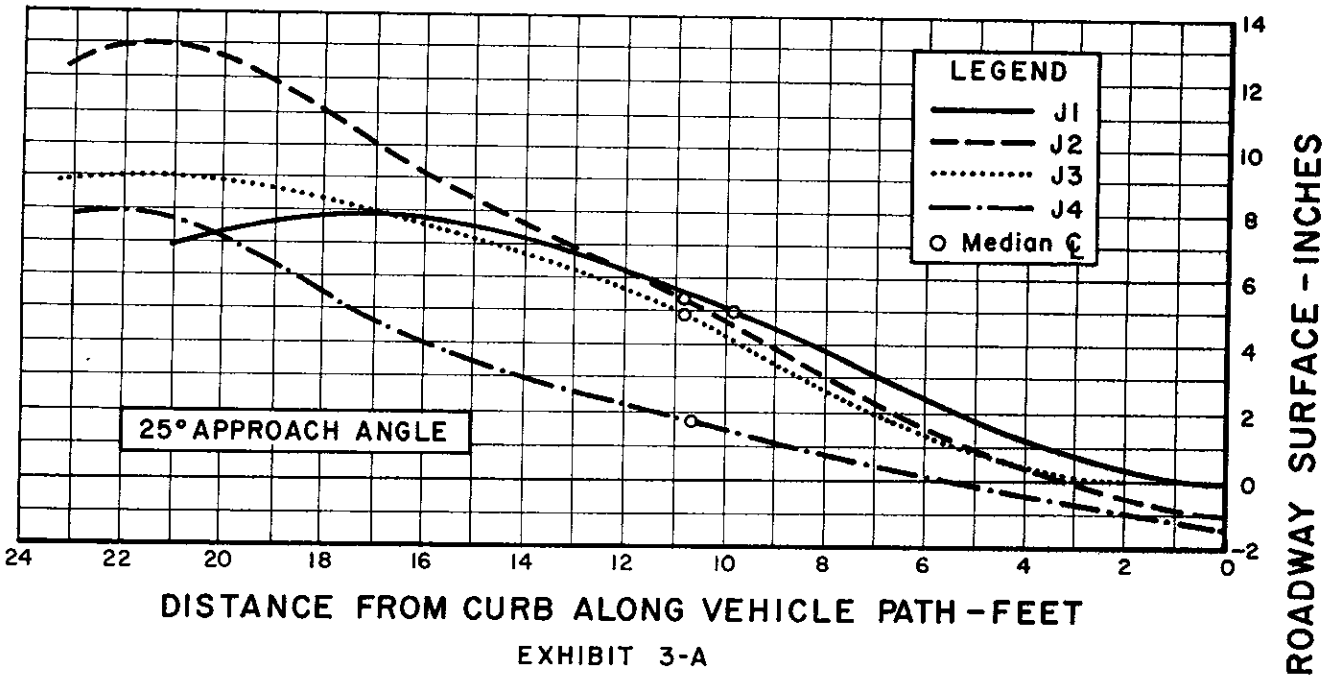

EXHIBIT 3-A

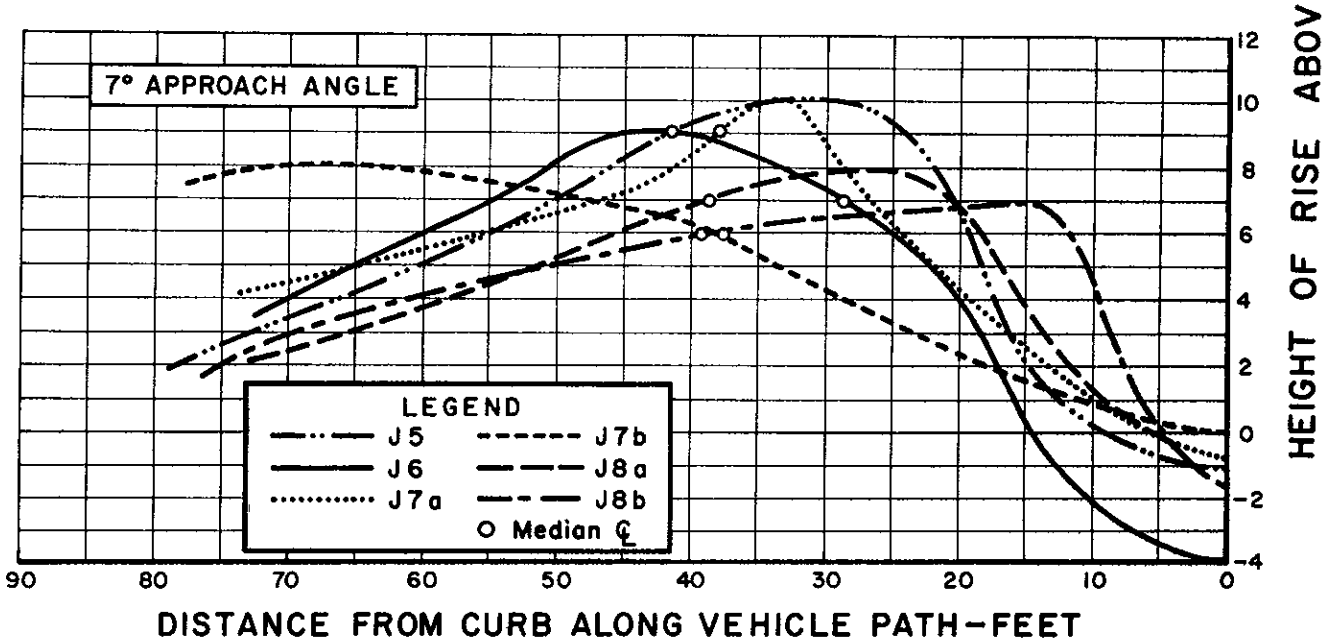

EXHIBIT 3-B

HEIGHT OF RISE VS DISTANCE FROM CURB IMPACT

ClibPDF - www.fastio.com

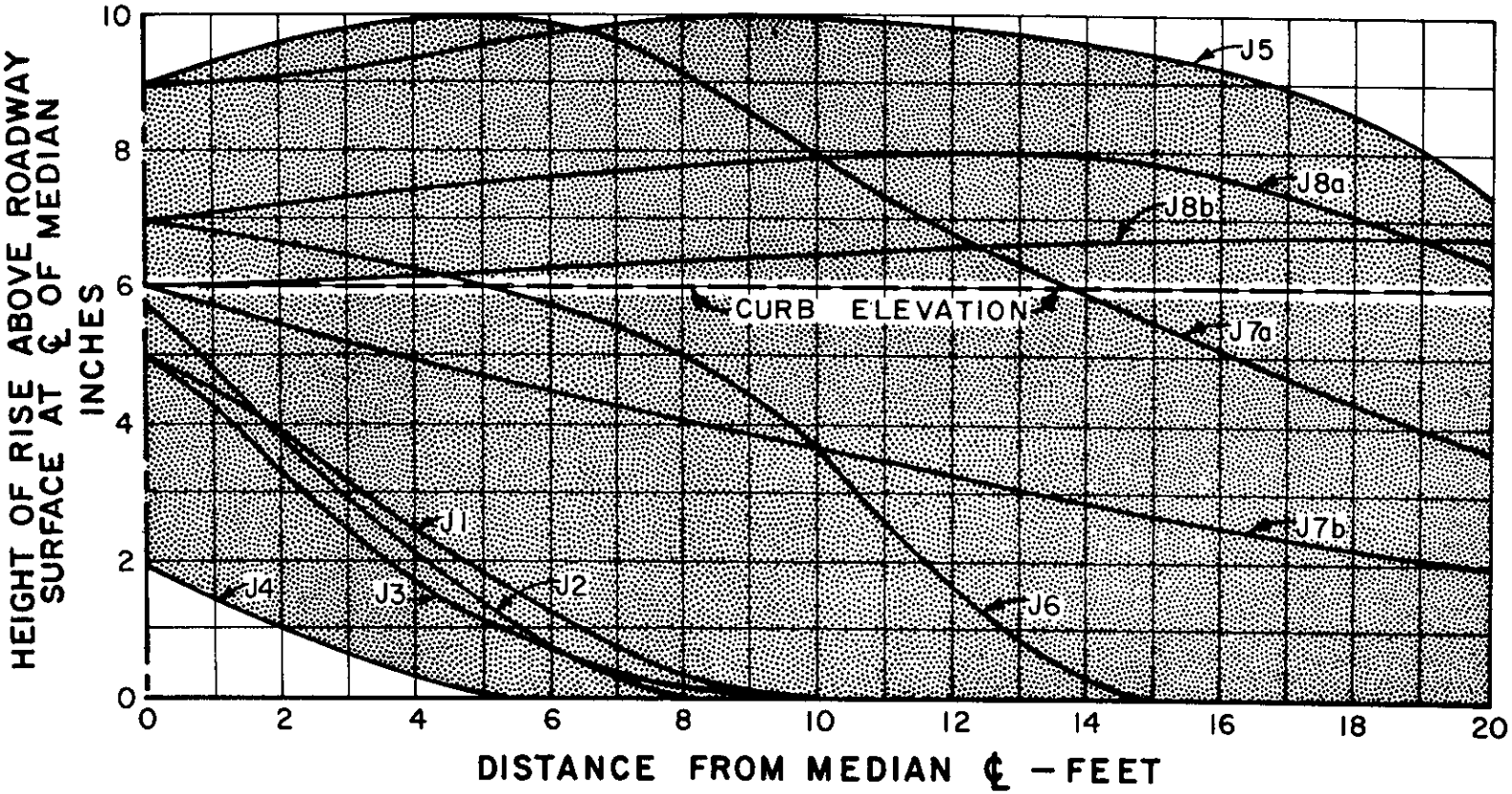

HEIGHT OF RISE VS DISTANCE FROM MEDIAN ℄

EXHIBIT 4

ClibPDF - www.fastio.com

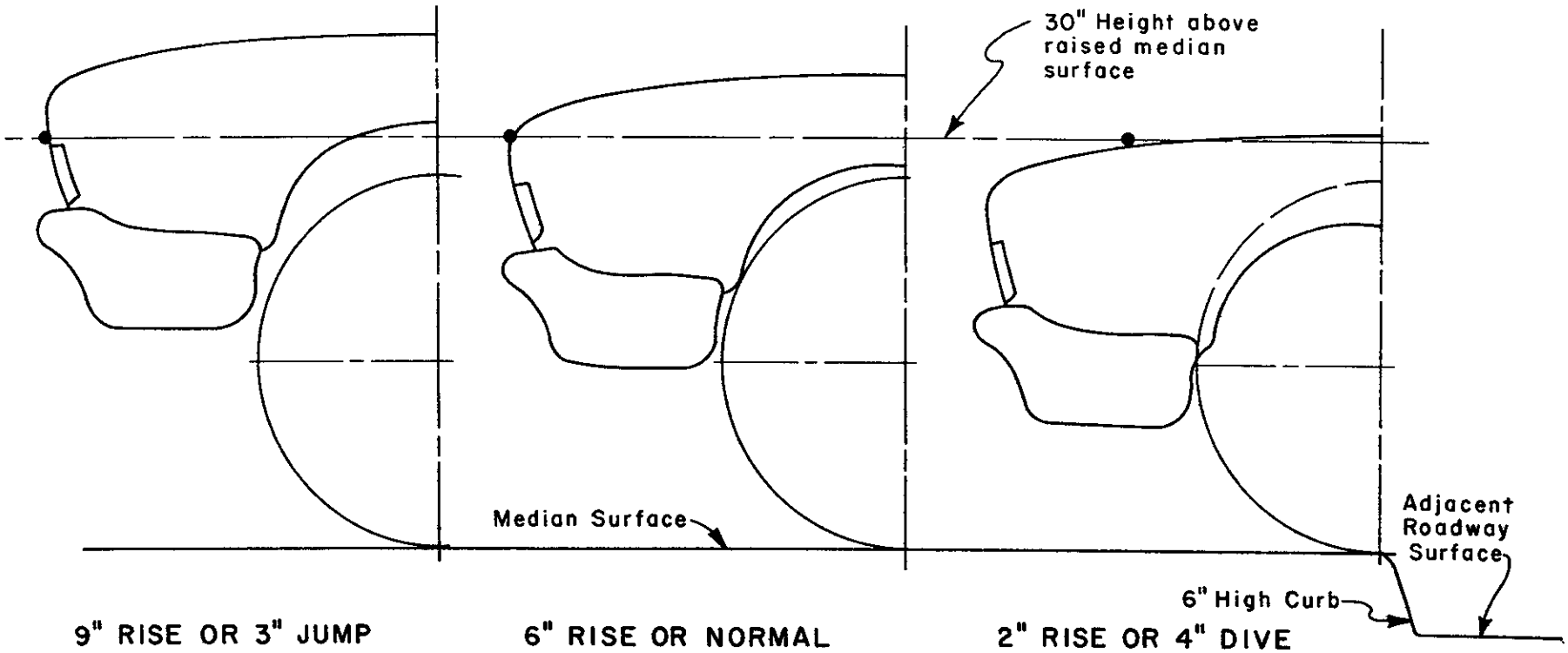

VEHICLE ATTITUDE COMPARISONS

1960 FORD

EXHIBIT 5

ClibPDF - www.fastio.com

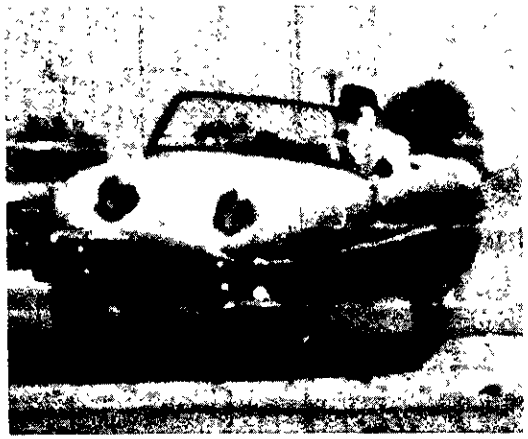

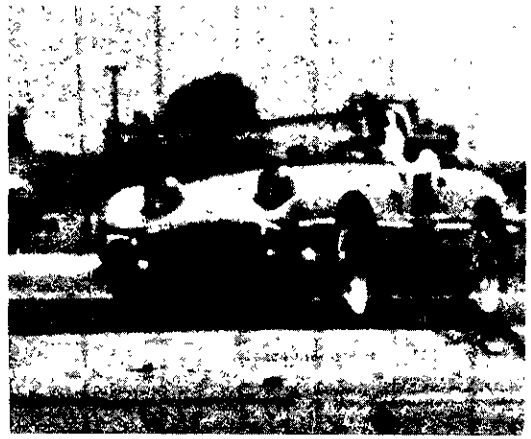

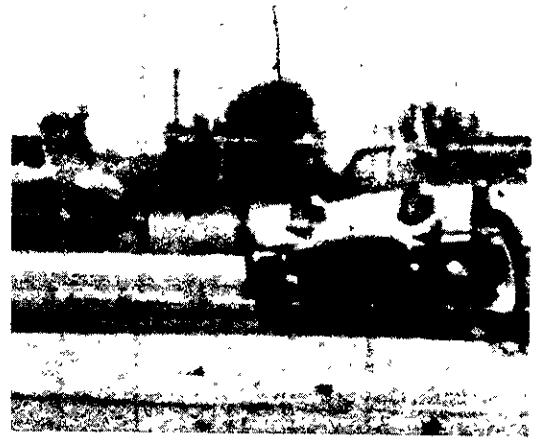

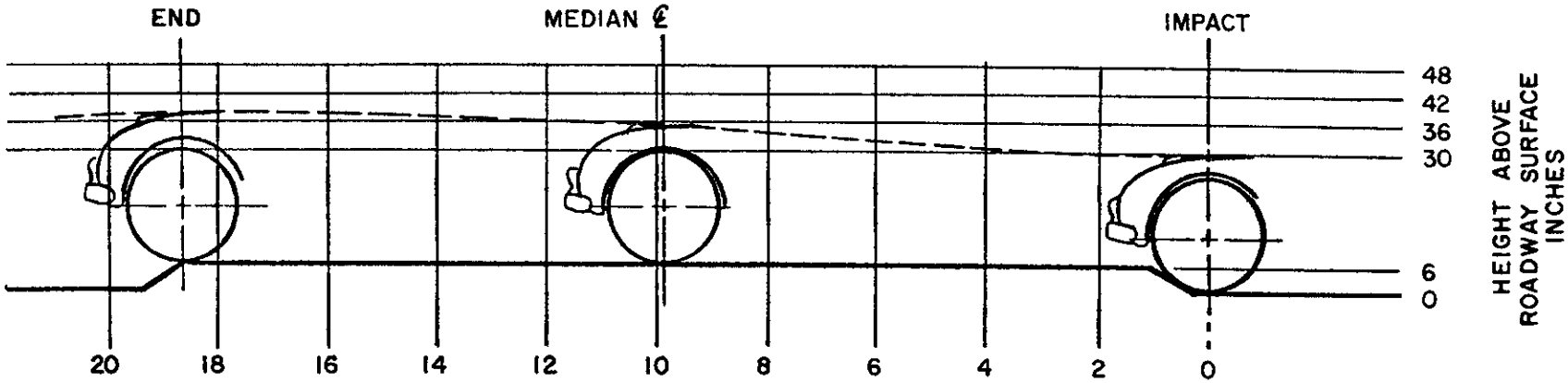

HEIGHT OF CURB. . . . . 6" Class B Curb
VEHICLE TIRE SIZE & DIA. . . . . 5.50-15 24"OD
TOTAL VEHICLE HEIGHT AT AXLE ℄ . . 30"
RISE AT MEDIAN ℄ . . . . . .5" Ref. from roadway surface
LENGTH & WIDTH OF INSTALLATION. . 200' long x 7' wide
GROUND CONDITION. . . . . Dry
VEHICLE DAMAGE. . . . . 3 Rims bent - 3 tires blown
MAX. RISE. . . . . .8" Ref. from roadway surface

TEST NO. J1
DATE. 7-11-63
VEHICLE. . . . . 61 AH Sprite
SPEED. . . . . .57 mph
IMPACT ANGLE. . . .25°
VEHICLE WEIGHT. .1900#
(W/DUMMY & INSTRUMENTATION)

EXHIBIT 6

ClibPDF - www.fastio.com

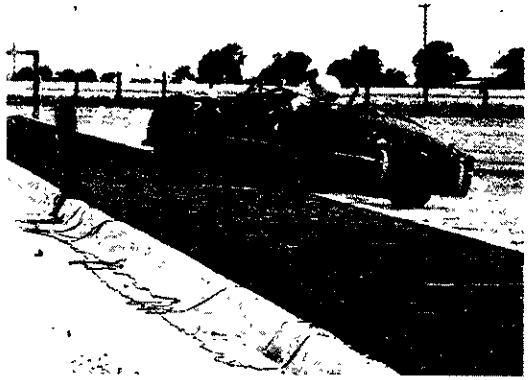

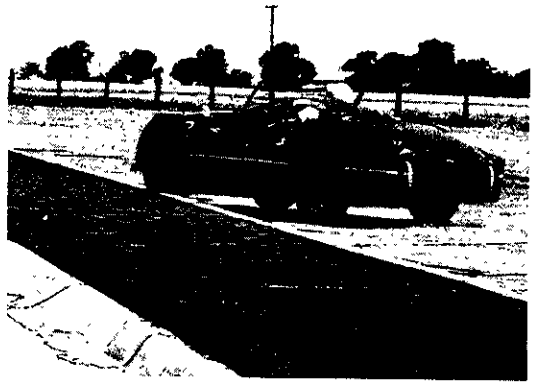

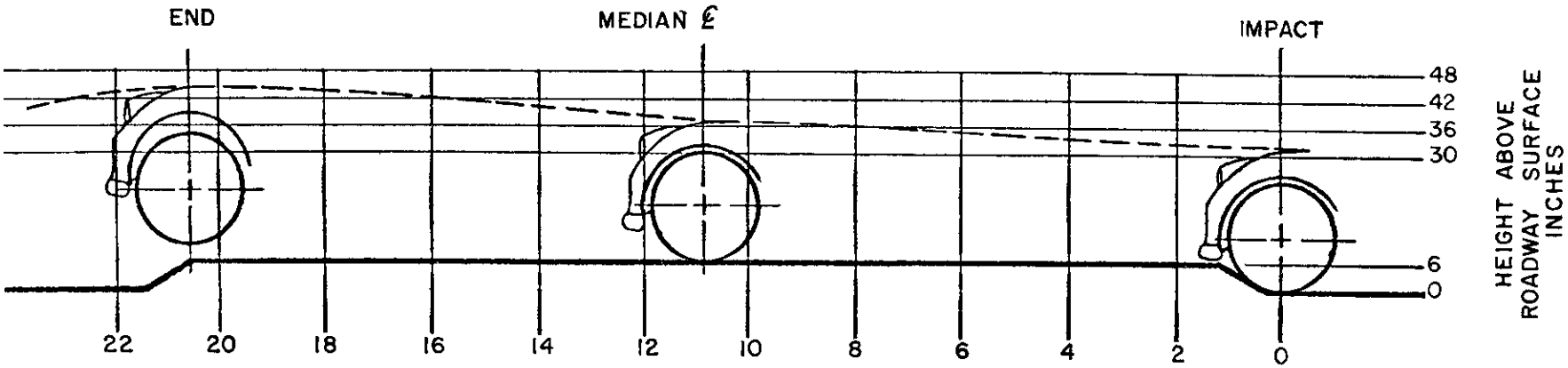

HEIGHT OF CURB . . . . . 6" Class B Curb
VEHICLE TIRE SIZE & DIA. . . . . 5.50-15 26" OD
TOTAL VEHICLE HEIGHT AT AXLE ℄ . . 33"
RISE AT MEDIAN ℄ . . . . . 5 3/4" Ref. from roadway surface.
LENGTH & WIDTH OF INSTALLATION. . 200' long x 7' wide
GROUND CONDITION. . . . . Dry
VEHICLE DAMAGE. . . . . 2 Rims bent
MAX. RISE. . . . . 13" Ref. from roadway surface

TEST NO. J2
DATE. 7-17-63
VEHICLE . . . . . 58 TRIUMPH TR-3
SPEED. . . . . 62 mph
IMPACT ANGLE. . . 25°
VEHICLE WEIGHT. . 2540#
(W/DUMMY & INSTRUMENTATION)

EXHIBIT 7

ClibPDF - www.fastio.com

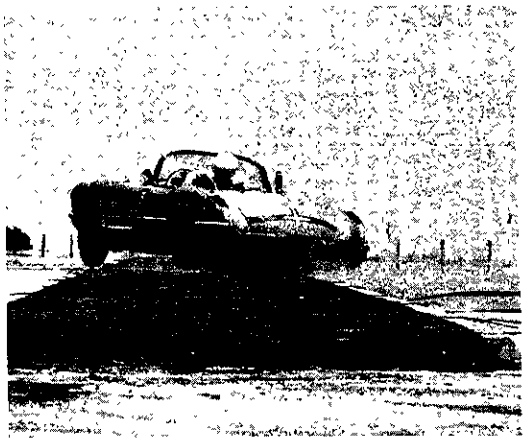

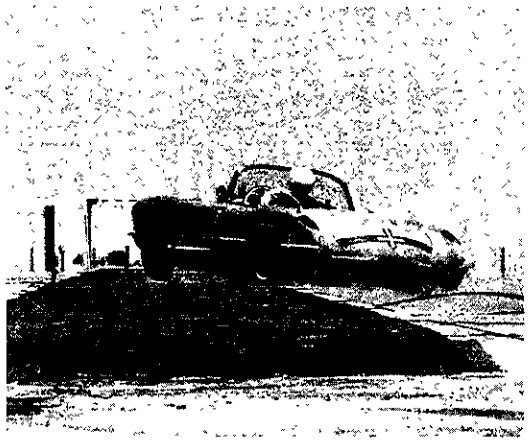

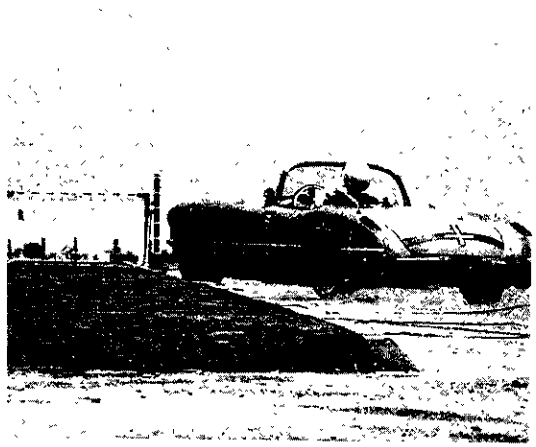

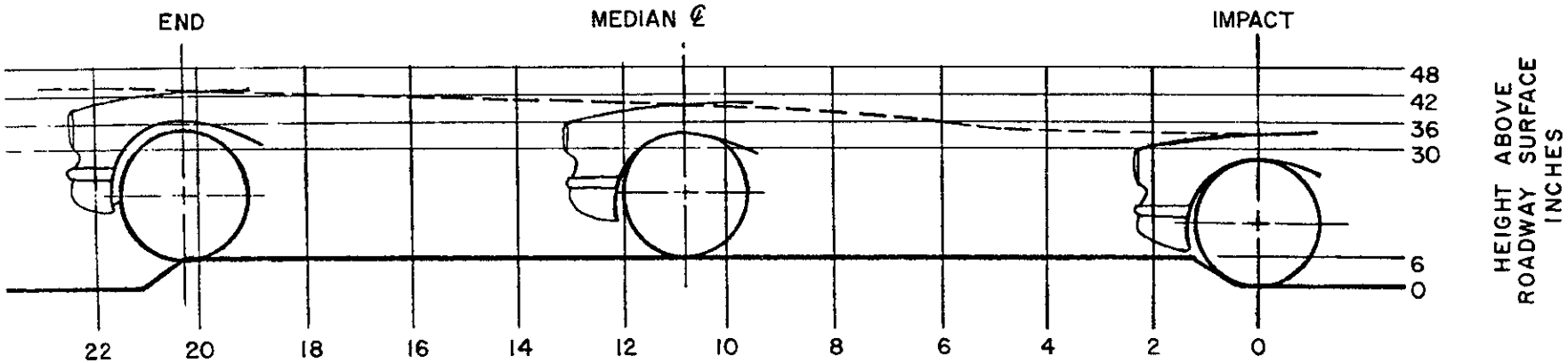

HEIGHT OF CURB..... 6" Class B Curb
VEHICLE TIRE SIZE & DIA..... 6.70-15 27" OD
TOTAL VEHICLE HEIGHT AT AXLE ℄.... 34"
RISE AT MEDIAN ℄..... 5" Ref. from roadway surface
LENGTH & WIDTH OF INSTALLATION... 200' long x 7' wide
GROUND CONDITION..... Dry
VEHICLE DAMAGE..... 2 Rims bent - tire blown
MAX. RISE..... 9" Ref. from roadway surface

TEST NO..... J3
DATE..... 7-22-63
VEHICLE..... 57 CHEV. CORVETTE
SPEED..... 66 mph
IMPACT ANGLE..... 25°
VEHICLE WEIGHT.... 3300#
(W/DUMMY & INSTRUMENTATION)

EXHIBIT 8

ClibPDF - www.fastio.com

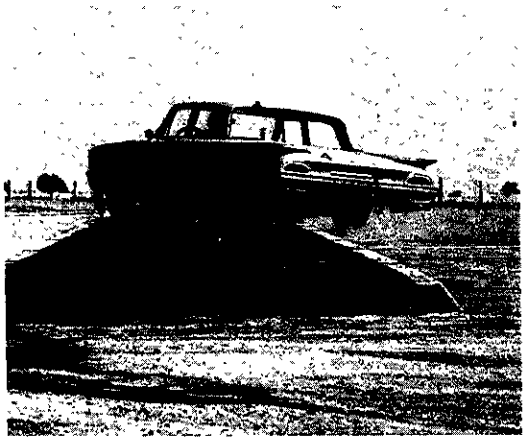

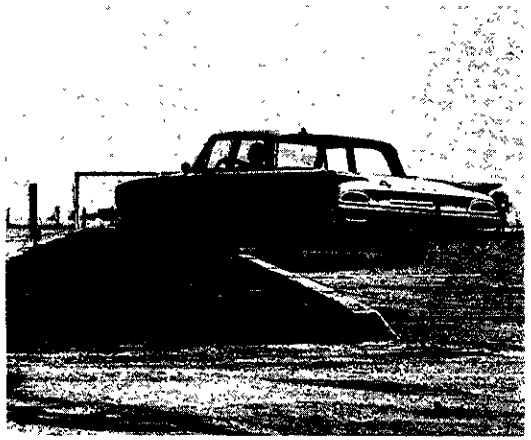

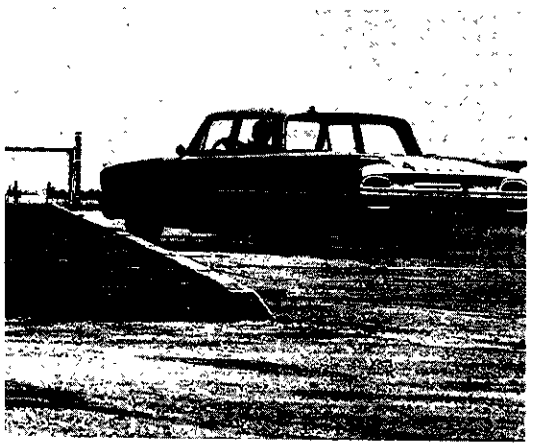

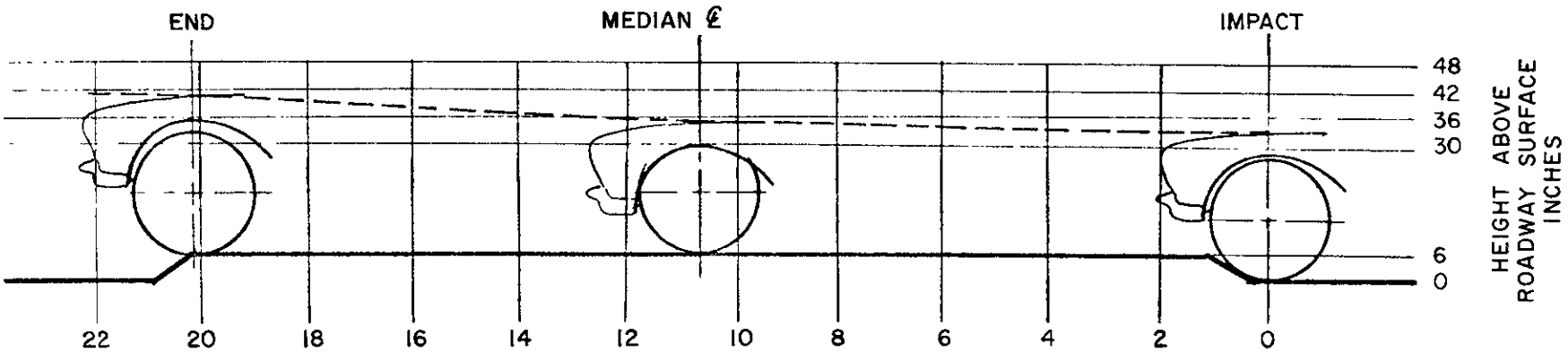

HEIGHT OF CURB	6" Class B Curb
VEHICLE TIRE SIZE & DIA	7.50-14 26"OD
TOTAL VEHICLE HEIGHT AT AXLE ℄	34"
RISE AT MEDIAN ℄	2" Ref. from roadway surface.
LENGTH & WIDTH OF INSTALLATION	200' long x 7' wide
GROUND CONDITION	Dry
VEHICLE DAMAGE	2 Rims bent – 1 tire blown
MAX. RISE	8" Ref. from roadway surface

TEST NO.	J4
DATE	7-24-63
VEHICLE	60 FORD Sedan
SPEED	64 mph
IMPACT ANGLE	25°
VEHICLE WEIGHT (W/DUMMY & INSTRUMENTATION)	4318 #

EXHIBIT 9

ClibPDF - www.fastio.com

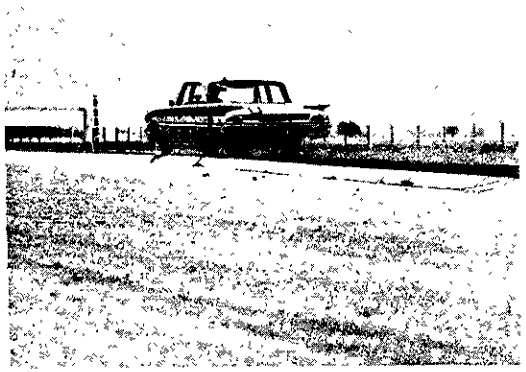

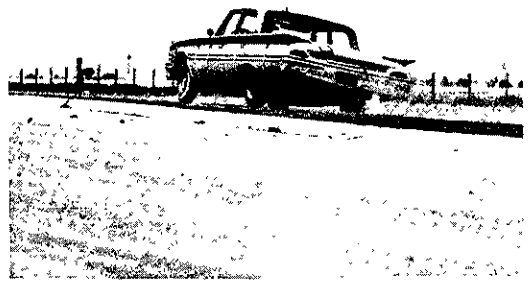

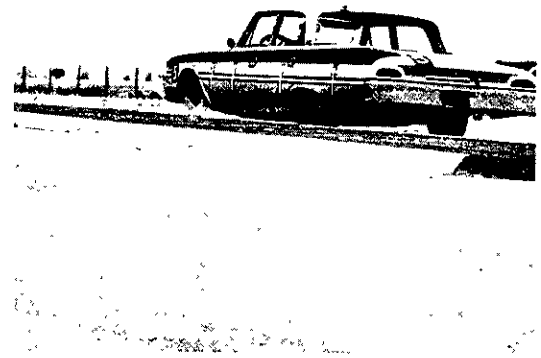

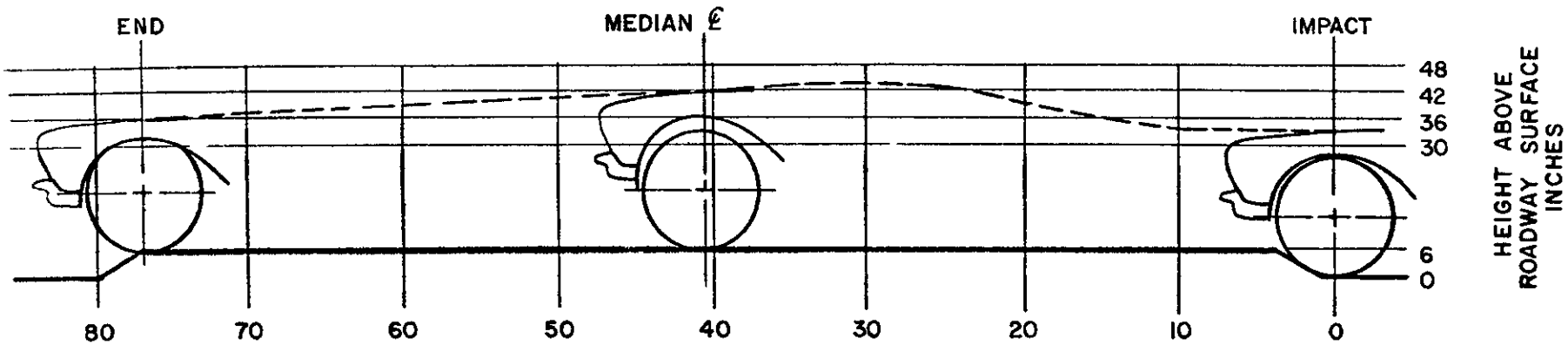

HEIGHT OF CURB . . . . . 6" Class B Curb
VEHICLE TIRE SIZE & DIA. . . . . 7.50-14 26" OD
TOTAL VEHICLE HEIGHT AT AXLE ℄ . . 34
RISE AT MEDIAN ℄ . . . . . 9" Ref. from roadway surface
LENGTH & WIDTH OF INSTALLATION . . 200' long x 7' wide
GROUND CONDITION . . . . . Dry
VEHICLE DAMAGE . . . . . None
MAX. RISE . . . . . 10" Ref. from roadway surface

TEST NO. J5
DATE 7-24-63
VEHICLE . . . . . 60 FORD Sedan
SPEED . . . . . 65 mph
IMPACT ANGLE . . . 7°
VEHICLE WEIGHT . 4318 #
(W/DUMMY & INSTRUMENTATION)

EXHIBIT 10

ClibPDF - www.fastio.com

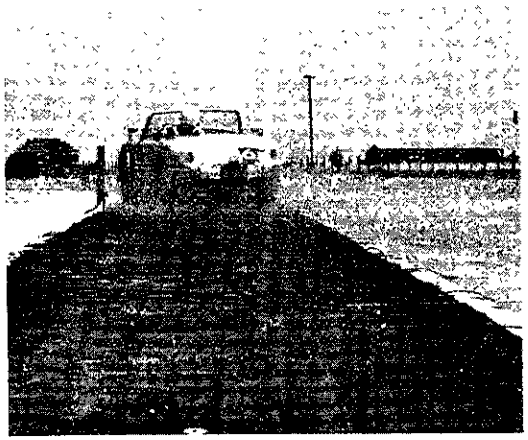

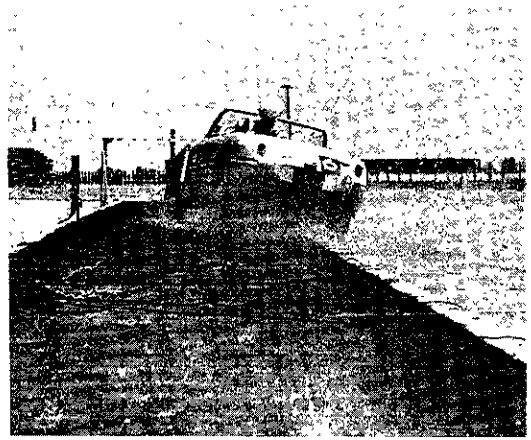

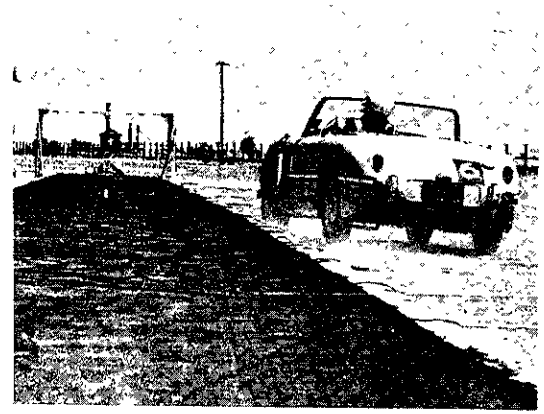

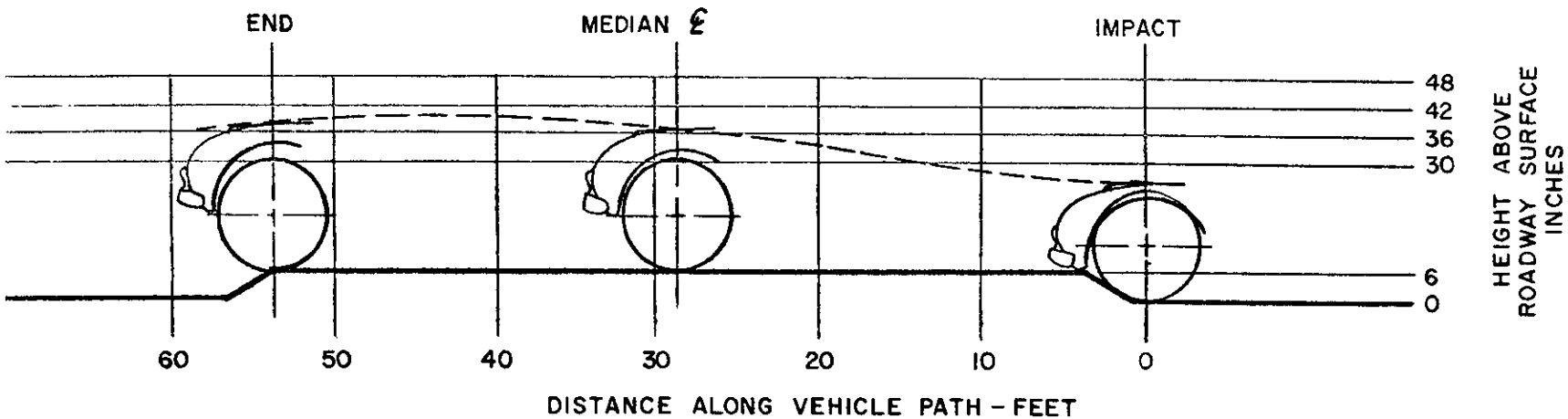

HEIGHT OF CURB	6" Class B Curb
VEHICLE TIRE SIZE & DIA.	5.20-13 30" OD
TOTAL VEHICLE HEIGHT AT AXLE ℄	30"
RISE AT MEDIAN ℄	7" Ref. from roadway surface
LENGTH & WIDTH OF INSTALLATION	200' long x 7' wide
GROUND CONDITION	Dry
VEHICLE DAMAGE	None
MAX. RISE	9" Ref. from roadway surface

TEST NO.	J6
DATE	7-26-63
VEHICLE	61 AH SPRITE
SPEED	56 mph
IMPACT ANGLE	7°
VEHICLE WEIGHT (W/DUMMY & INSTRUMENTATION)	1900 #

EXHIBIT 11

ClibPDF - www.fastio.com

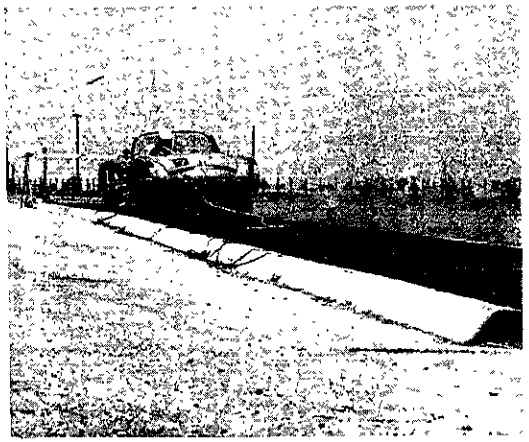

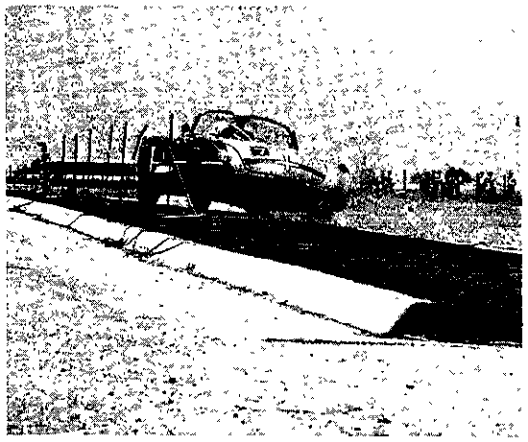

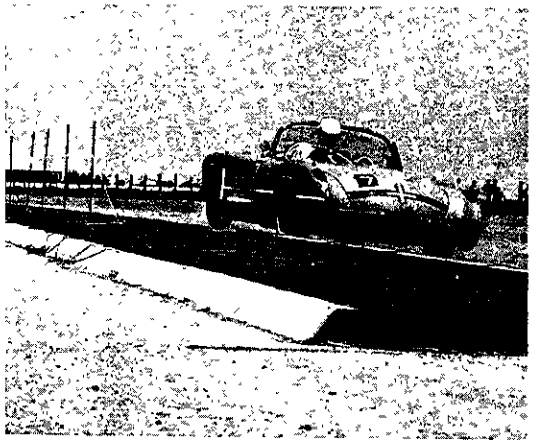

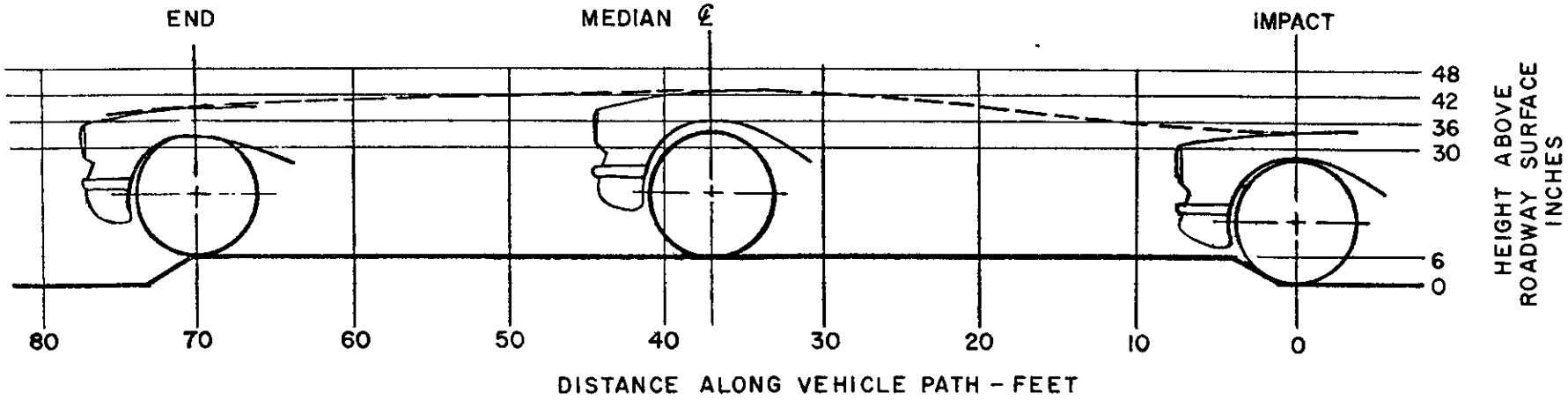

HEIGHT OF CURB..... 6" Class B Curb
VEHICLE TIRE SIZE & DIA..... 6.70-15 27" OD
TOTAL VEHICLE HEIGHT AT AXLE ℄.... 34"
RISE AT MEDIAN ℄..... 9" Ref. from roadway surface
LENGTH & WIDTH OF INSTALLATION.... 200' long x 7' wide
GROUND CONDITION..... Dry
VEHICLE DAMAGE..... 2 Rims bent - 1 tire blown
MAX. RISE..... 10" Ref. from roadway surface

TEST NO..... J7a
DATE..... 7-30-63
VEHICLE..... 57 CHEV. CORVETTE
SPEED..... 62 mph
IMPACT ANGLE..... 7°
VEHICLE WEIGHT.. 3300#
(W/DUMMY & INSTRUMENTATION)

EXHIBIT 12

ClibPDF - www.fastio.com

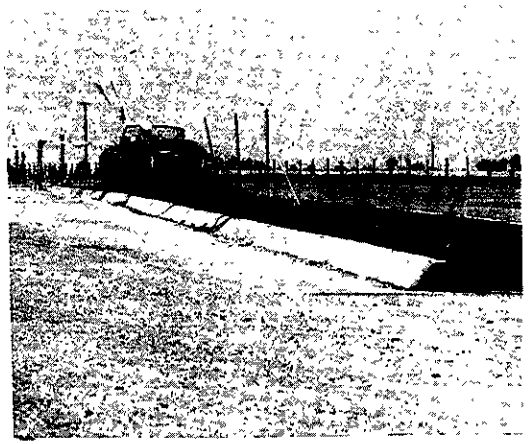

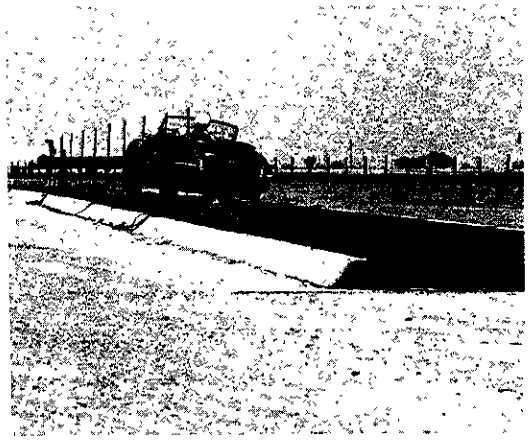

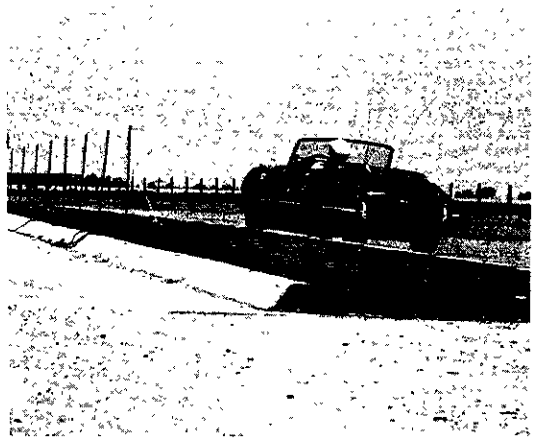

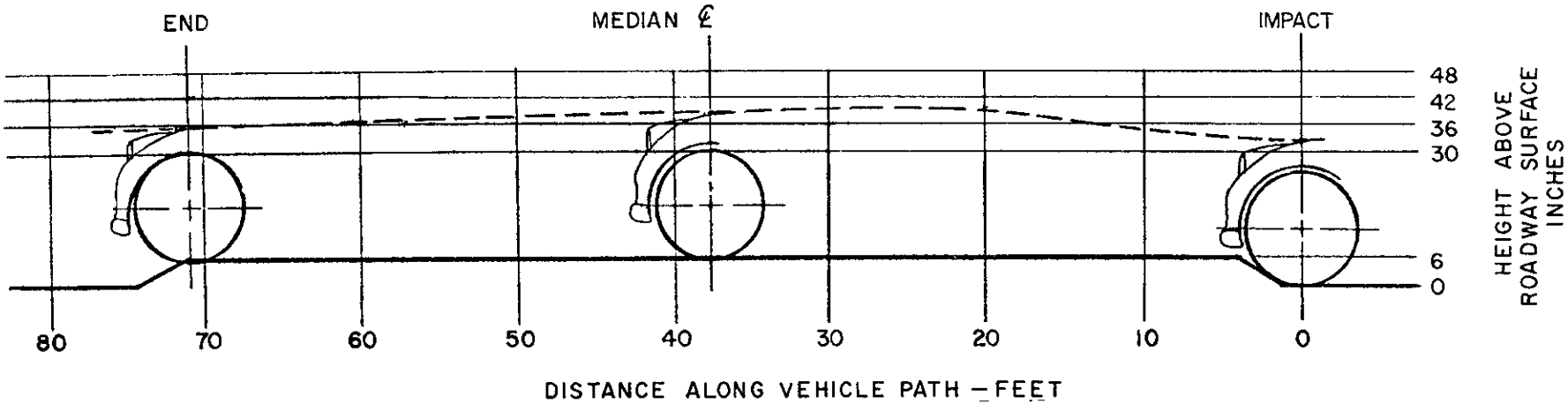

HEIGHT OF CURB.....6" Class B Curb
VEHICLE TIRE SIZE & DIA.....5.50-15 26" OD
TOTAL VEHICLE HEIGHT AT AXLE ℄.....33"
RISE AT MEDIAN ℄.....7" Ref. from roadway surface
LENGTH & WIDTH OF INSTALLATION....200' long x 7' wide
GROUND CONDITION.....Dry
VEHICLE DAMAGE.....1 Rim bent
MAX. RISE.....8" Ref. from roadway surface

TEST NO J8a
DATE.....7-31-63
VEHICLE.....58 TRIUMPH TR-3
SPEED.....57 mph
IMPACT ANGLE.....7°
VEHICLE WEIGHT....2540#
(W/DUMMY & INSTRUMENTATION)

EXHIBIT 13

ClibPDF - www.fastio.com

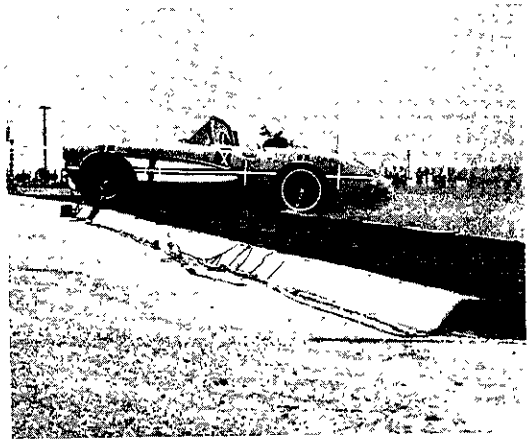

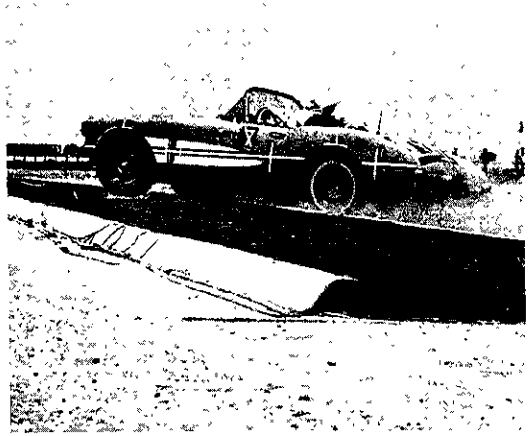

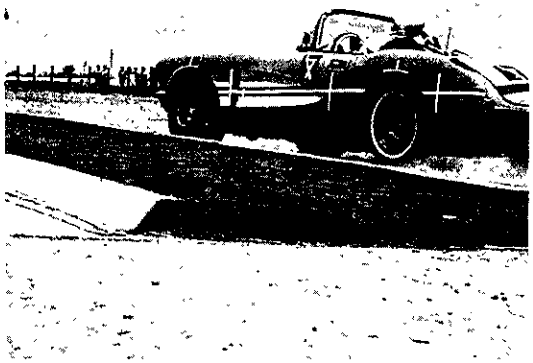

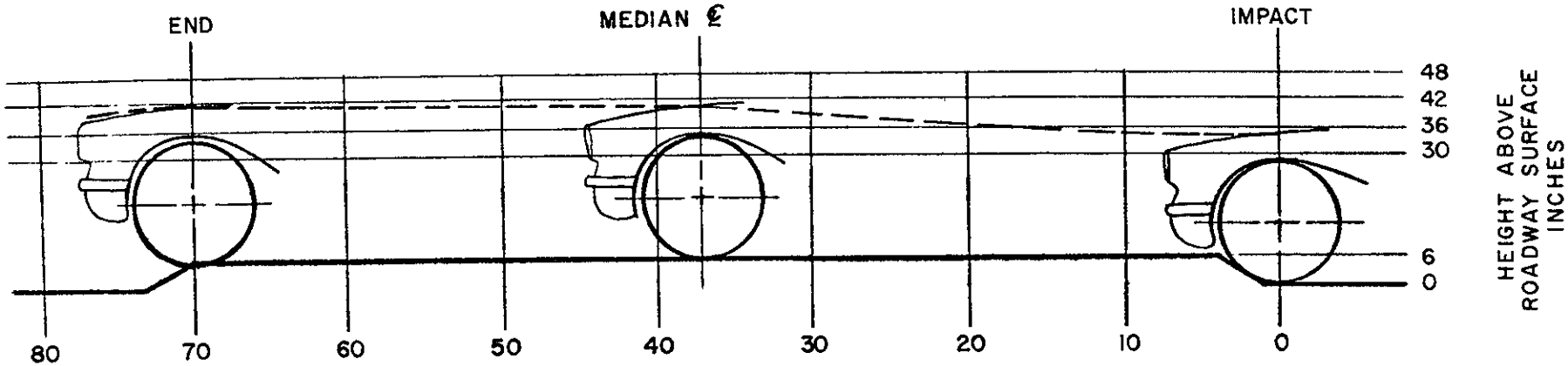

HEIGHT OF CURB.....6" Class B Curb
VEHICLE TIRE SIZE & DIA.....6.70-15 27" OD
TOTAL VEHICLE HEIGHT AT AXLE ℄....34"
RISE AT MEDIAN ℄.....6" Ref. from roadway surface
LENGTH & WIDTH OF INSTALLATION....200' long x 7' wide
GROUND CONDITION.....Dry
VEHICLE DAMAGE.....2 Rims bent - 1 tire blown
MAX. RISE.....8" Ref from roadway surface

TEST NO.....J7b
DATE.....7-30-63
VEHICLE.....57 CHEV. CORVETTE
SPEED.....Brakes at impact
IMPACT ANGLE.....7°
VEHICLE WEIGHT...3300#
(W/DUMMY & INSTRUMENTATION)

EXHIBIT 14

ClibPDF - www.fastio.com

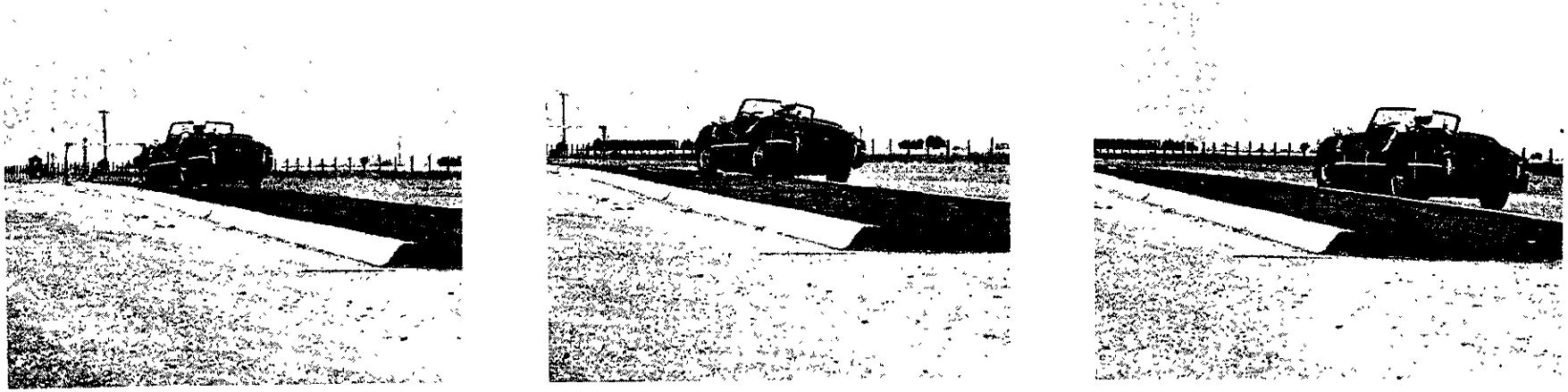

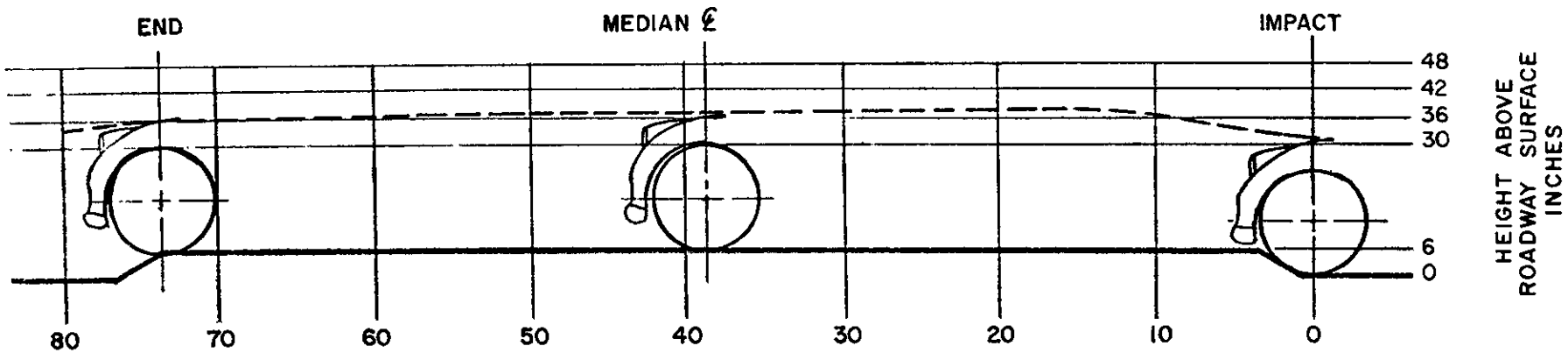

HEIGHT OF CURB. . . . . .6" Class B Curb
VEHICLE TIRE SIZE & DIA. . . . . .5.50-15 26" OD
TOTAL VEHICLE HEIGHT AT AXLE ℄ . . 33"
RISE AT MEDIAN ℄ . . . . . .6" Ref. from roadway surface
LENGTH & WIDTH OF INSTALLATION. . 200' long x 7' wide
GROUND CONDITION. . . . . Dry
VEHICLE DAMAGE. . . . . 2 Rims bent
MAX. RISE. . . . . .7" Ref. from roadway surface

TEST NO. J8b
DATE 7-31-63
VEHICLE . . . . . .58 TRIUMPH TR-3
SPEED. . . . . .Brakes at impact
IMPACT ANGLE. . . .7°
VEHICLE WEIGHT. .2540#
(W/DUMMY & INSTRUMENTATION)

EXHIBIT 15

ClibPDF - www.fastio.com