Technical Report Documentation Page

1. REPORT No.
CA-TL-7240-77-27

2. GOVERNMENT ACCESSION No.

3. RECIPIENT'S CATALOG No.

4. TITLE AND SUBTITLE
The Degradation Of Oxides Of Nitrogen And Total Hydrocarbons In Ambient Air Samples

5. REPORT DATE
December 1977

6. PERFORMING ORGANIZATION

7. AUTHOR(S)
K.O. Pinkerman

8. PERFORMING ORGANIZATION REPORT No.
19701-657240

9. PERFORMING ORGANIZATION NAME AND ADDRESS
Office of Transportation Laboratory
California Department of Transportation
Sacramento, California 95819

10. WORK UNIT No.

11. CONTRACT OR GRANT No.

12. SPONSORING AGENCY NAME AND ADDRESS
California Department of Transportation
Sacramento, California 95807

13. TYPE OF REPORT & PERIOD COVERED
Final 1975-1977

14. SPONSORING AGENCY CODE

15. SUPPLEMENTARY NOTES

16. ABSTRACT

One hour integrated bag samples of ambient air were collected during the morning peak traffic hour in the San Diego Metropolitan area. These samples, collected in Tedlar Bags, were analyzed in a laboratory to evaluate the degradation of hydrocarbons (HC) and oxides of nitrogen (NOx) for various storage periods up to three days. Ambient concentrations of HC and NOx ranged from 0.1 to 3.4 ppm and 0.05 to 1.00 ppm, respectively. Samples were collected during both summer and winter periods to evaluate the effects of various ratios of HC to NOx concentrations on degradation. The results from this study indicate that insignificant degradation of total hydrocarbons (THC) and reactive hydrocarbons (RHC) occurs for storage times under 3 days. NOx degradation at concentration levels below (0.40 ppm) was insignificant up to the 3 day storage time. The sample containing NOx at 1.00 ppm showed degradation of about 5% over a 5 hour period. For the three day storage period for NOx an inconclusive pattern of degradation was evident.

17. KEYWORDS
Degradation, bag samples, storage period, oxides of nitrogen, hydrocarbons, time, ambient concentration

18. No. OF PAGES:
35

19. DRI WEBSITE LINK
http://www.dot.ca.gov/hq/research/researchreports/1976-1977/77-27.pdf

20. FILE NAME
77-27.pdf

DIVISION OF CONSTRUCTION
TRANSPORTATION LABORATORY
RESEARCH REPORT

THE DEGRADATION OF OXIDES OF NITROGEN AND TOTAL HYDROCARBONS IN AMBIENT AIR SAMPLES

FINAL REPORT

CA-TL-7240-77-27

DEC. 1977

Caltrans
CALIFORNIA DEPARTMENT OF TRANSPORTATION

TECHNICAL REPORT STANDARD TITLE PAGE

1. REPORT NO CA-TL-7240-77-27	2. GOVERNMENT ACCESSION NO	3. RECIPIENT'S CATALOG NO
4. TITLE AND SUBTITLE THE DEGRADATION OF OXIDES OF NITROGEN AND TOTAL HYDROCARBONS IN AMBIENT AIR SAMPLES		5. REPORT DATE December 1977 6. PERFORMING ORGANIZATION CODE
7. AUTHOR(S) K. O. Pinkerman		8. PERFORMING ORGANIZATION REPORT NO 19701-657240
9. PERFORMING ORGANIZATION NAME AND ADDRESS Office of Transportation Laboratory California Department of Transportation Sacramento, California 95819		10. WORK UNIT NO 11. CONTRACT OR GRANT NO
12. SPONSORING AGENCY NAME AND ADDRESS California Department of Transportation Sacramento, California 95807		13. TYPE OF REPORT & PERIOD COVERED Final - 1975-1977 14. SPONSORING AGENCY CODE

15. SUPPLEMENTARY NOTES

16. ABSTRACT

One hour integrated bag samples of ambient air were collected during the morning peak traffic hour in the San Diego Metropolitan area. These samples, collected in Tedlar Bags, were analyzed in a laboratory to evaluate the degradation of hydrocarbons (HC) and oxides of nitrogen (NO_x) for various storage periods up to three days. Ambient concentrations of HC and NO_x ranged from 0.1 to 3.4 ppm and 0.05 to 1.00 ppm, respectively. Samples were collected during both summer and winter periods to evaluate the effects of various ratios of HC to NO_x concentrations on degradation. The results from this study indicate that insignificant degradation of total hydrocarbons (THC) and reactive hydrocarbons (RHC) occurs for storage times under 3 days. NO_x degradation at concentration levels below (0.40 ppm) was insignificant up to the 3 day storage time. The sample containing NO_x at 1.00 ppm showed degradation of about 5% over a 5 hour period. For the three day storage period for NO_x an inconclusive pattern of degradation was evident.

17. KEY WORDS Degradation, bag samples, storage period, oxides of nitrogen, hydrocarbons, time, ambient concentration.	18. DISTRIBUTION STATEMENT No restrictions. This document is available to the public through the National Technical Information Service Springfield, VA 22161.

19. SECURITY CLASSIF. (OF THIS REPORT)	20. SECURITY CLASSIF. (OF THIS PAGE)	21. NO. OF PAGES	22. PRICE
Unclassified	Unclassified	35	

DS-TL-1242 (Rev.6/76)

STATE OF CALIFORNIA
DEPARTMENT OF TRANSPORTATION
DIVISION OF CONSTRUCTION
OFFICE OF TRANSPORTATION LABORATORY

December 1977

TL No. 657240

Mr. C. E. Forbes
Chief Engineer

Dear Sir:

I have approved and now submit for your information this final research project report titled:

THE DEGRADATION OF OXIDES
OF NITROGEN AND TOTAL HYDROCARBONS
IN AMBIENT AIR SAMPLES

Study made by . . . . . Enviro-Chemical Branch

Under the Supervision of . . . . . Earl C. Shirley, P.E.

Principal Investigator . . . . . Carl R. Sundquist, P.E.

Report Prepared by . . . . . Kenneth O. Pinkerman P.E.
and Morris Knight

Very truly yours,

George A Hill

GEORGE A. HILL
Chief, Office of Transportation Laboratory

Attachment

KOP:lb

ACKNOWLEDGEMENT

The data for this report were generated by tests performed by Morris Knight and Bob Satterlee of the California Department of Transportation, District 11, in San Diego.

Appreciation is expressed to the San Diego Air Pollution Control District, in particular, Hal Brown and Stella Wilcox, for their efforts in coordinating the design of the experiment, the quality assurance measures, and the interpretation of the results of this study. Without their involvement, this research project would have been difficult to complete in a timely and efficient manner.

The excellent assistance of the entire air quality group of District 11, under the general direction of Gene Calman, for their involvement in this study and, in particular, Henry Chisholm, who served as the District project administrator, is gratefully acknowledged.

TABLE OF CONTENTS

LIST OF FIGURES

LIST OF TABLES

INTRODUCTION

During the summer and fall of 1975, Caltrans and the San Diego County Air Pollution Control District conducted a joint study of air pollutants and their transport in the San Diego Basin.

This study was conducted in conjunction with a federally financed research project titled "Transportation Systems and Regional Air Quality" (1). The main objective of that project is to provide an emissions and pollutant data base for several metropolitan regions and to use the obtained data to verify concentrations predicted by air quality models.

To perform the field data gathering part of the project, it was decided that the best approach would be placing trailers containing monitoring equipment in fixed locations throughout the study area. In addition, the San Diego Air Pollution Control District (SDAPCD) stations were reviewed as to siting and their data were also used.

As the study progressed, voids in the data base were noted. It was decided that additional samples were needed between the fixed sites, aloft over land, and over the ocean immediately west of the basin. These supplemental samples would be bag samples of oxides of nitrogen (NO_x), total hydrocarbons (THC), and carbon monoxide (CO). The problem with this type of sampling is the effect of length of storage time, bag material, mix of pollutants, etc., on the accuracy of analysis.

The delay period from sampling to analysis may run from several hours up to three days, depending on work schedules, weekends and holidays, during which time the pollutants in the tedlar bags could react, changing the chemical composition of the sample.

To check on this possibility, some tests were run in June 1975, prior to the beginning of the survey, to determine ambient levels of HC and NO_x for summer conditions. A number of bag samples were taken simultaneously from a single location and tested over a three day period for hydrocarbon and oxides of nitrogen concentrations. No significant change in concentrations of these pollutants in the samples was observed. However, the ambient concentrations of these pollutants were low (THC 0.1-3.4 ppm, NO_x below 0.4 ppm) during this season and it was decided that additional testing should be done in the late fall when nitrogen oxide and hydrocarbon levels are normally higher. The data included herein are the result of this later study, made in December.

A group of samples was taken on each of three successive days for this study. Each group was sampled at the same location and at the same time of day. At 12 specified times, ranging from 1 hour up to 32 hours after sampling, three bags from each group were tested. The result was three sets of data showing changes in hydrocarbon and nitrogen oxide levels over a 32 hour period.

CONCLUSIONS

1) For concentrations of total hydrocarbons (THC) and non-methane hydrocarbons (THC - CH_4) of 0.1 ppm to 3.4 ppm stored in tedlar bags for up to 3 days the degradation was insignificant.

2) The NO_x concentrations below 0.4 ppm showed insignificant degradation in tedlar bags for up to 3 days storage time.

3) For NO_x concentrations in the range of 1.0 ppm, The degradation over a 5 hour period was approximately 5%.

4) NO_x concentrations of 1.0 ppm held for more than 5 hours and up to 3 days showed an inconclusive pattern of degradation, however, the typical increase of NO_2 and decrease of NO did occur.

These conclusions are drawn for the data set generated for the specific level and combination of air pollutants created under particular meteorological conditions and may only hold for those conditions. (See pages 4-7 for analyzers, 7 and 8 for sampling system, 14 and 15 for meteorological conditions.)

RECOMMENDATIONS

The results of the study should be extended by:

1) Studying ambient samples when ozone concentrations are higher.

2) Studying various hydrocarbon splits representative of emissions from power plants, vehicles, oil refineries, etc.

3) Evaluating the number of times tedlar bags can be used before internal film build up on the walls creates an interference.

4) Testing to establish the number of times bags can be used before leakage occurs.

IMPLEMENTATION

California Department of Transportation Districts will be informed of the findings of this research. They will have the option of bag sampling for additional THC and NO_x data under the control conditions as stated.

ANALYSIS OF AIR SAMPLES

The bag testing program was set up so that three bags were analyzed during each testing period.

Two separate sample lines were used. One was connected to the Hydrocarbon Analyzer, Bendix Model 8201 Flame Ionization Detection Gas Chromatograph, and the other was connected to the Oxides of Nitrogen Analyzer, TECO Model 14B Chemiluminescent Detection.

Hydrocarbon Analyzer

The Ambient Hydrocarbon Analyzer is designed to measure non-methane (reactive) hydrocarbons (THC less CH_4) in ambient air. The analyzer uses a hydrogen flame ionization detector (FID) which is extremely sensitive to hydrocarbons and has been proven to be reliable (2). The measured methane (CH_4) is electronically subtracted from the total hydrocarbon (THC) value to give a measure of the reactive hydrocarbons. Automatic standardization of the detector output during each cycle insures a stable baseline for long-term unattended operation. No catalyst, converter, or scrubber is employed in the determination of either methane or total hydrocarbons. Only hydrogen and hydrocarbon-free air are required as support gases for this instrument. The hydrogen is supplied by a

hydrogen generator which separates distilled water into hydrogen and oxygen by an electrolytic process. The hydrogen is then purified by a membrane purifier. Hydrogen is supplied on a demand basis at the required pressure (see Figure 1-3).

All analytical functions and associated readouts are programmed by a solid state electronic timer. Automatic cycling through total hydrocarbons and methane provides the reactive hydrocarbons output which is updated after each cycle (i.e., every 200 seconds). The three signals are stored in permanent memories with output terminals on the rear panel.

The accuracy for this instrument is ±1% of full scale for ranges used: The (0-10 ppm) CH_4 (0-5 ppm) and THC-CH_4 (0-10 ppm).

Nitric Oxide and Nitrogen Dioxide Analyzer

The chemiluminescent method of nitric oxide analysis is based upon the principle that nitric oxide (NO) reacts with ozone (O_3) to give nitrogen dioxide (NO_2), oxygen (O_2), and about 10 percent electron excited NO_2*. The transition of electron excited NO_2* back to normal energy state NO_2 gives a light emission (hv) between 590-2750 nm, i.e.:

$$NO + O_3 = NO_2 + NO_2^* + O_2$$

$$NO_2^* = NO_2 + hv$$

In the presence of an excess amount of ozone, the intensity of this emission is proportional to the mass flow rate of nitric oxide into the reaction chamber. Ozone for the reaction is generated by passing bottled air or oxygen over

an ultraviolet light source. As ozone and nitric oxide mix, the chemiluminescent reaction produces a light emission which is proportional to NO concentration and is measured by the photomultiplier tube.

This method also lends itself to total oxides of nitrogen analysis (NO and NO_2) by reducing the nitrogen dioxide to nitric oxide and oxygen by passing over a heated catalyst, Then proceeding with the reaction, i.e.: (3)

$$NO_2 = NO + O$$

$$NO + O_3 = NO_2 + NO_2^* + O_2$$

$$NO_2^* = NO_2 + hv$$

See Figure 4.

The analysis has proven to have an accuracy of ±2% of full scale for a range of 0-2.0 ppm. This analyzer requires bottled oxygen to operate. It uses an air scrubber** (to remove ambient NO and NO_2) to obtain zero reference air and uses bottled nitric oxide in nitrogen for span (see Calibration Section).

Each bag sample was first tested by the Hydrocarbon Analyzer and then by the Oxides of Nitrogen Analyzer. The reason for this testing sequence was that the sample flow rate is much lower in the HC analyzer. In the reverse sequence there is a possibility of evacuating the bag sample before both pollutants are analyzed.

**This scrubber is a stainless steel cylinder containing chromium trioxide (CRO_3) on firebrick and soda lime with a downstream glass paper filter to trap particulates.

The testing periods were eight to ten minutes for Hydrocarbons and a minimum of five minutes for Oxides of Nitrogen.

A flow control valve was placed in the NO-NO_x line. This reduced the bypass from 2.5 SCFH* (.07 m^3/hr) to .75 SCFH (.02 m^3/hr). This modification reduced bypass flow at which the sample was being used. The sample pressure and reaction chamber pressure were kept constant, their respective values were 5 psig (352 gm/cm^2) and 23 psig (1617 gm/cm^2).

SAMPLING SYSTEM

The sampling train consisted of: 1) a main high flow vacuum pump pulling the sample through a large manifold with 7 ports (see Figure 5). The pump was a Gast Model IVBF-10M100X with a manual intake relief valve. The main manifold and the secondary manifold were designed and constructed by Transportation Laboratory personnel utilizing teflon through-out. 2) A secondary pump and manifold to fill sample bags. This pump, a Spectrex Model AS-120-3, pulled the sample, from one of the seven ports of the main manifold, and fed a smaller manifold for distribution to 6 tedlar bags (see Figure 6). Forty-two bags were filled simultaneously over a one hour period. These bags were made by the Transportation Laboratory from sheet Tedlar (5 mil thickness) to a dimension of 12" x 18" (30.5 x 45.7 cm) and a volume of approximately 6,000 cc (366 in^3). All tubing (teflon), pumps, bags, manifolds, etc., exposed to the air sample, were relatively inert to the components in question.

See Figures 1-6 in Appendix for sampling train and analyzer system details. See Figures 12-15 for photographs of sampling system.

*SCFH - Standard Cubic Feet Per Hour

Thirty-six of the 42 bag samples were used for analysis with 6 extras for insurance in case of bag failure, low fillage, leakage, etc.

All samples were taken in a one hour period from 0700 to 0800 to represent high values from morning commuter traffic.

After sampling was completed, the sample bags were placed in opaque garbage bags (which upon testing blocked 98% of UV light) to protect from possible further photochemical reactions. The bags then were brought into the District 11 Laboratory Building in San Diego, where the analyzers for THC and NO_x were set up in a permanent location.

Both analyzers were spanned with gas typical of higher values than the ranges of concentration in the samples. The concentration values were established for each aluminum cylinder of gas by analysis performed by the California Department of Health, Air and Industrial Hygiene Laboratory (AIHL), using EPA recommended methods. On-site calibrations were performed before and after this testing by AIHL to document instrument condition. In addition, a representative of the San Diego Air Pollution Control District (SDAPCD) observed operation procedure and assisted Caltrans by cross-testing span gases with SDAPCD equipment. A good correlation was obtained between the two agencies. Agreement was within the practical accuracy of the span gases and the analytical method ($\pm 2\%$).

Tables 1 and 2 show the ambient pollutant levels at the time the samples were taken determined by SDAPCD.

CALIBRATION

Primary calibration was performed on the analyzers by AIHL. Their calibration procedures are based on EPA reference methods.

Spot checks were performed by the SDAPCD. A bottled "Cal gas" mixture was used in the Hydrocarbon Analyzer and a NO_2 permeation tube from Monitor Lab Inc. was used in the Oxides of Nitrogen analyzer.

Weekly calibration checks were run by Caltrans' District 11, Air Quality Section personnel. The Hydrocarbon Analyzer was spanned with bottled gases calibrated by AIHL. One bottle consisted of 5 ppm methane in air. The other bottle was 23.5 ppm propane in air.

The oxides of nitrogen analyzer was spanned with 5 ppm nitric oxide (NO) in nitrogen. This gas was also calibrated by AIHL. The zero was checked with a "clean air" scrubber supplied by AIHL.

Instrument Accuracy

For the Bendix Model 8201, the accuracy is 1% of full scale (10 ppm THC) (5 ppm methane). The TECO Model 14B has an accuracy of 1% of full scale (2 ppm).

ANALYSIS OF DATA

BAG DEGRADATION STUDY STATISTICAL ANALYSIS

A statistical analysis was designed to test the validity of bag sampling data for total hydrocarbons, methane, nonmethane hydrocarbons, total oxides of nitrogen, nitric oxide, and nitrogen dioxide.

The experimental data were generated for three consecutive days, December 8, 9, and 10 of 1975. During a one-hour averaging time from 0700 to 0800 PST, thirty-six bags were filled with ambient air. The bags were tested 0, 1, 2, 3, 4, 6, 7, 8, 9, 23, 27, 30 and 33 hours later with the equipment at the Caltrans Laboratory in San Diego. The reported values in parts per million for the three bags tested each hour were averaged together and put into a computer file for each of the three days. The three days were combined into one file.

The degradation data were then graphed. Figure 8 shows degradation of oxides of nitrogen, Figure 9 shows nitric oxide, Figure 10 shows nitrogen dioxide, and Figure 11 shows total hydrocarbons. The equations for the lines of best fit were determined for each group. These equations are listed in the Analysis of Data on page 12.

The following data analyses consist of a least squares linear regression method and the resulting equations represent best fit for the data. In the case of NO_x values above 1 ppm, a 2nd degree polynomial curve fit was used.

NO_x	
Group 1	$y = .377 - .0004X$
Group 2	$y = 1.032 - .007\ x + .0001X^2$
Group 3	$y = .336 - .0014X$
NO	
Group 1	$y = .323 - .0012X$
Group 2	$y = .973 - .019X + .0002X^2$
Group 3	$y = .251 - .0015X$
NO_2	
Group 1	$y = .052 + 0008X$
Group 2	$y = .074 + .010X - .002X^2$
Group 3	$y = .089 - .00008X$
THC	
Group 1	$y = 3.056 + .002X$
Group 2	$y = 2.897 - .0009X$
Group 3	$y = 2.663 - .002X$

It must be considered that the value changes are small and are very close to the lower sensitivity limit of the analyzers.

comparative data were obtained from the SDAPCD for the ambient concentrations at the nearest station which is Lindberg Field. These concentrations are given in Table 1 for June 2, 3, and 4 and in Table 2 for December 8, 9, and 10.

Only the December data are graphed. The June 2-4, 1975, data are given in Table 3. These were not graphed due to the low level of pollutant concentrations and the fact that changes in concentrations could be caused by random error. No degradation is indicated in these samples.

BIBLIOGRAPHY

1. Transportation Systems and Regional Air Quality - FHWA Financed Research Performed by The California Department of Transportation, Transportation Laboratory, 1975.

2. Standard Method of Test for Hydrocarbons in the Atmosphere by Gas Chromatography - ASTM Method D2820, 1974.

Table 1

INITIAL CONCENTRATIONS FOR

JUNE 1975 STUDY

AMBIENT ONE HOUR AVERAGES

FROM SAN DIEGO APCD

6-2-75	NO_x	.03 ppm	0730-0830
	NO_2	.03 ppm	
	NO	.01 ppm	
	THC	1.6 ppm	
	CH_4	1.4 ppm	
	O_3	.02 ppm	
6-3-75	NO_x	.02 ppm	0800-0900
	NO_2	.02 ppm	
	NO	0	
	THC	1.6 ppm	
	CH_4	1.4 ppm	
	O_3	.03 ppm	
6-4-75	NO_x	.03 ppm	0700-0800
	NO_2	.02 ppm	
	NO	.02 ppm	
	THC	1.5 ppm	
	CH_4	1.4 ppm	
	O_3	(Instrument Down)	

METEOROLOGICAL CONDITIONS

Average wind speed 6 knots
Skies cloudy
Temperature 61°F

Table 2

INITIAL CONCENTRATIONS FOR

DECEMBER 1975 STUDY

AMBIENT ONE HOUR AVERAGES

FROM SAN DIEGO APCD

	THC	CH_4	NON CH_4	O_3
12-8-75	3.4	2.2	1.2	.02 ppm
12-9-75	3.0	1.9	1.1	.01 ppm
12-10-75	2.9	2.2	0.8	.01 ppm

	NO_x	NO	NO_2
12-8-75	.40	.34	.05
12-9-75	1.00	.92	.08
12-10-75	.36	.31	.07

METEOROLOGICAL CONDITIONS

Average wind speed 3 knots
Skies clear 8th and 9th, cloudy 10th
Temperature 48°F

Table 3

CONCENTRATIONS FOR

JUEN 2, 3, & 4, 1975 SAMPLES

Sample Date	Sample Age	Average Concentration* (ppm)					
		THC	CH_4	RHC**	NO_x	NO	NO_2
6-2-75	0	1.6	1.6	0	.02	.01	.01
	1						
	2						
	4						
	5						
	6						
	7						
	9						
	11						
	13						
	22						
	25						
	28						
	31						
	34					.01	
	46					.02	
	49						
	52						
	55						
	58	1.6	1.6	0	.02	.02	.01
6-3-75	0	1.6	1.6	0	.03	.02	.02
	1	1.7	1.7				
	3						
	4						
	5	1.7	1.7		.03		
	6	1.6	1.6		.02		
	8						
	10						
	12						.02
	21						.01
	24						
	27						
	30						
	33	1.6	1.6				
	45	1.7	1.7				
	48						
	51						
	54						
	57	1.7	1.7	0	.02	.02	.01

*Average of three bag samples.

**Non-Methane Hydrocarbons (Reactive)

Table 3 (cont.)

Sample Date	Sample Age	Average Concentration* (ppm)					
		THC	CH_4	RHC**	NO_x	NO	NO_2
6-4-75	0	1.6	1.6	0	.02	.01	.01
	1						
	2						
	4						
	5						
	6						
	7						
	9						
	11						
	13					.01	
	22					.02	
	25						
	28						
	31						
	34						
	46						
	49						
	52						
	55						
	58	1.6	1.6	0	.02	.02	.01

*Average of three bag samples.

**Non-Methane Hydrocarbons (Reactive)

APPENDIX A

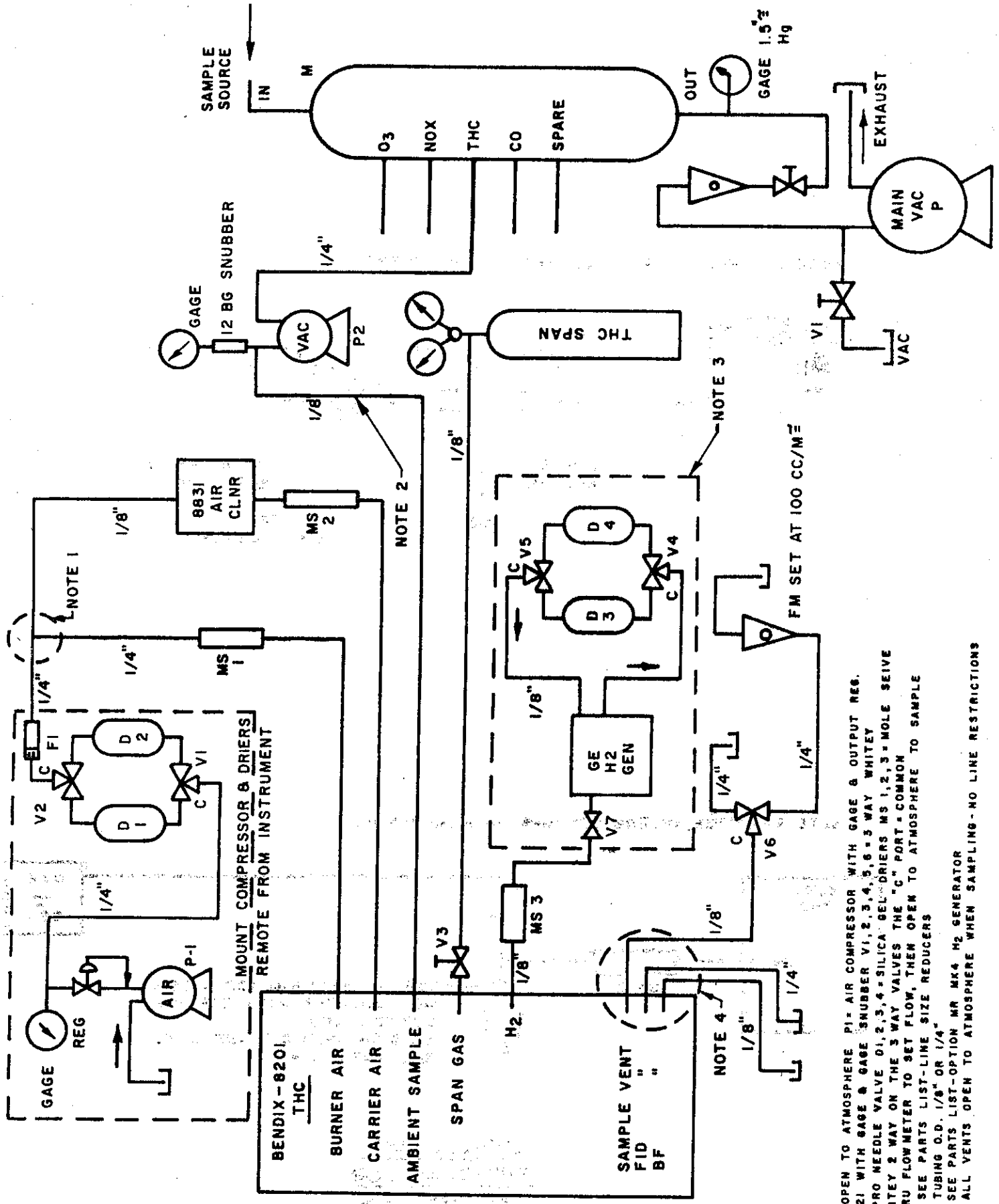

THC-ANALYZER PIPING SYSTEM

1 REQ'D.

Figure 1

NOTE 1 - REDUCE LINE SIZE AFTER AIR DRIERS.

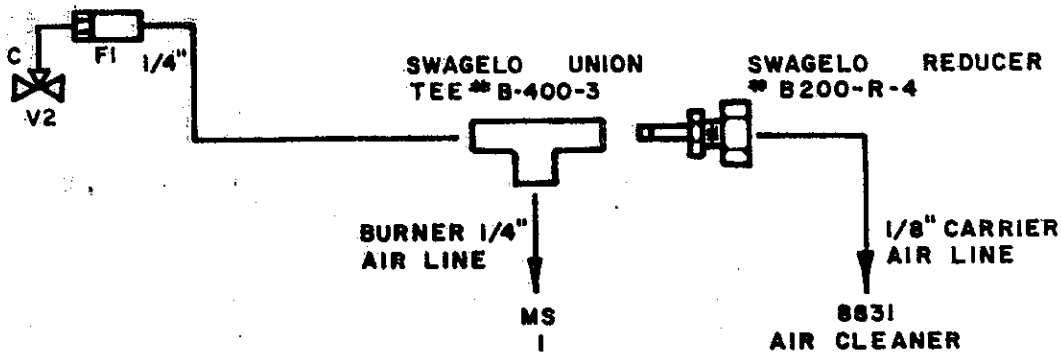

NOTE 3 - OPTION, MILTON ROY MK4 H_2 GENERATOR.

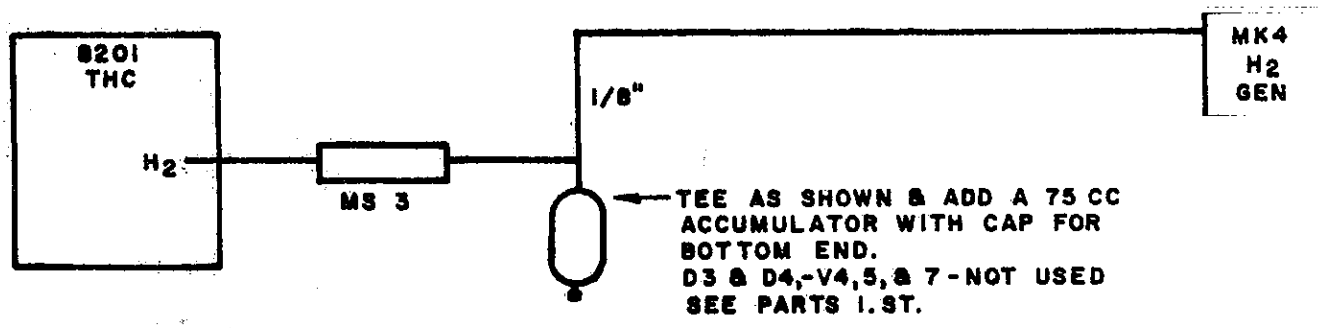

BENDIX 8201
THC-ANALYZER
AIR SYSTEM

Figure 2

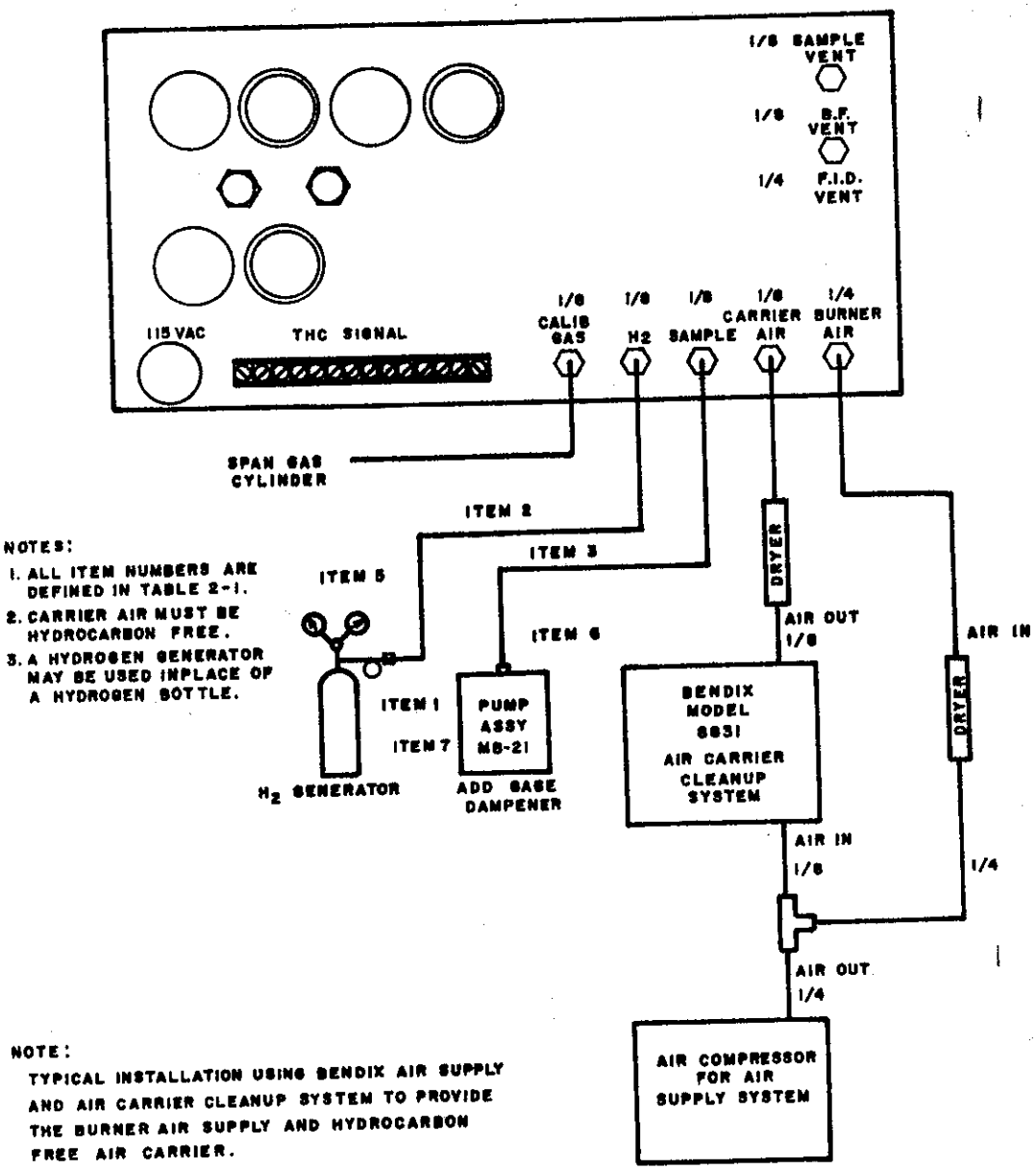

NOTES:

1. ALL ITEM NUMBERS ARE DEFINED IN TABLE 2-1.
2. CARRIER AIR MUST BE HYDROCARBON FREE.
3. A HYDROGEN GENERATOR MAY BE USED INPLACE OF A HYDROGEN BOTTLE.

NOTE:

TYPICAL INSTALLATION USING BENDIX AIR SUPPLY AND AIR CARRIER CLEANUP SYSTEM TO PROVIDE THE BURNER AIR SUPPLY AND HYDROCARBON FREE AIR CARRIER.

DIAGRAM FOR BENDIX CO MANUAL

REFERENCE ONLY

Figure 3

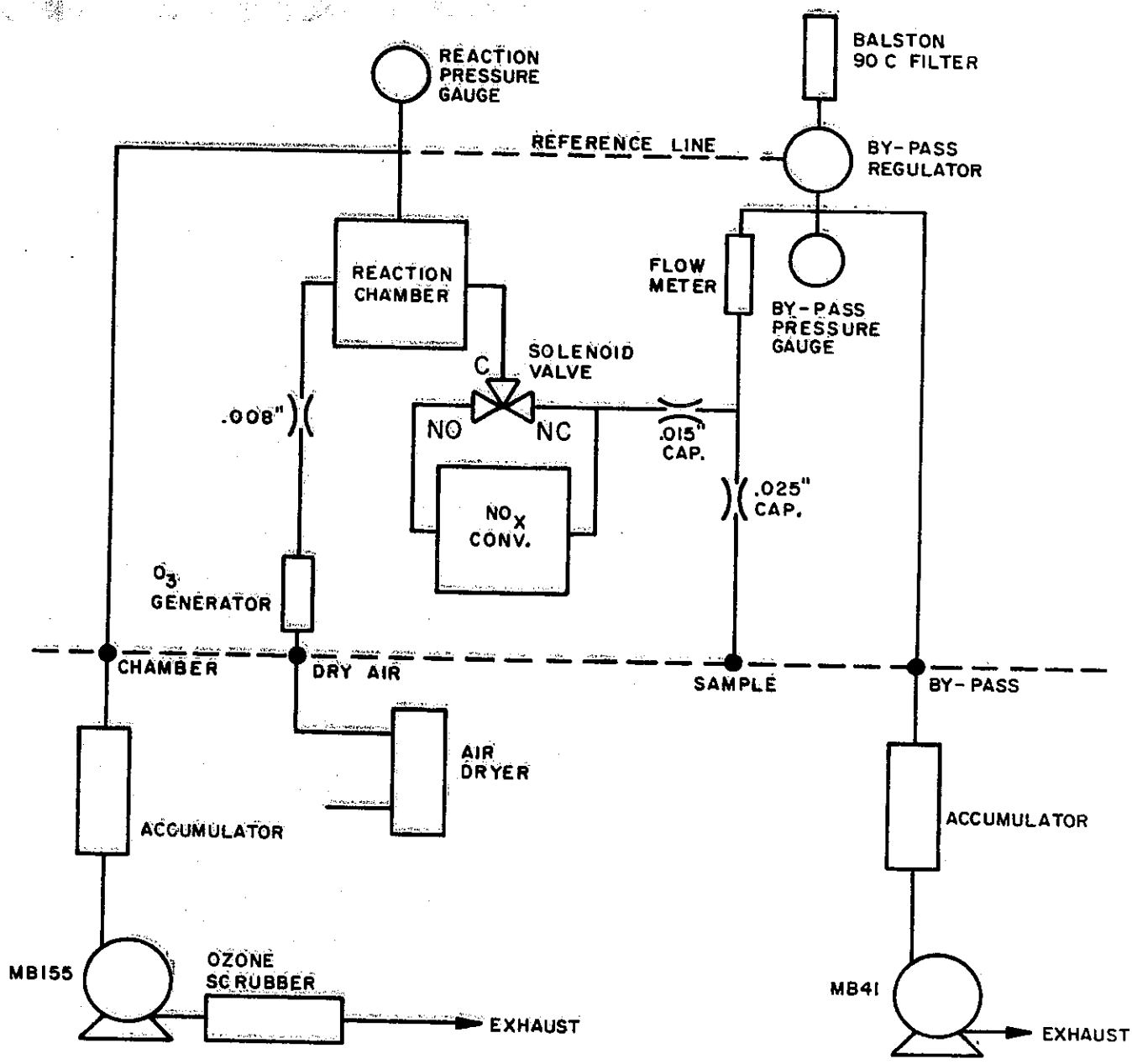

SCHEMATIC FLOW DIAGRAM
MODEL 14, $NO-NO_2-NO_X$ GAS ANALYZER

Figure 4

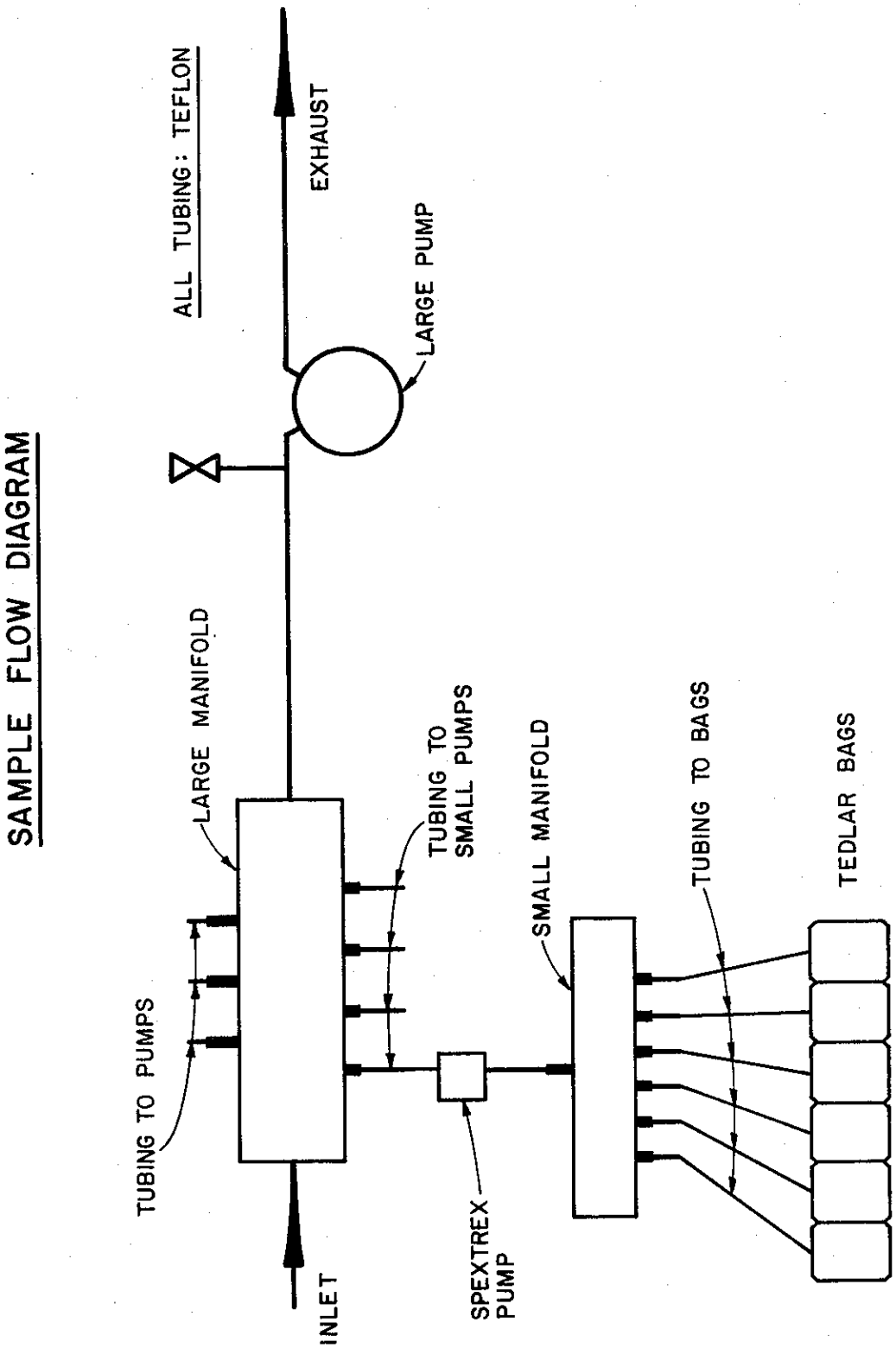

Figure 5

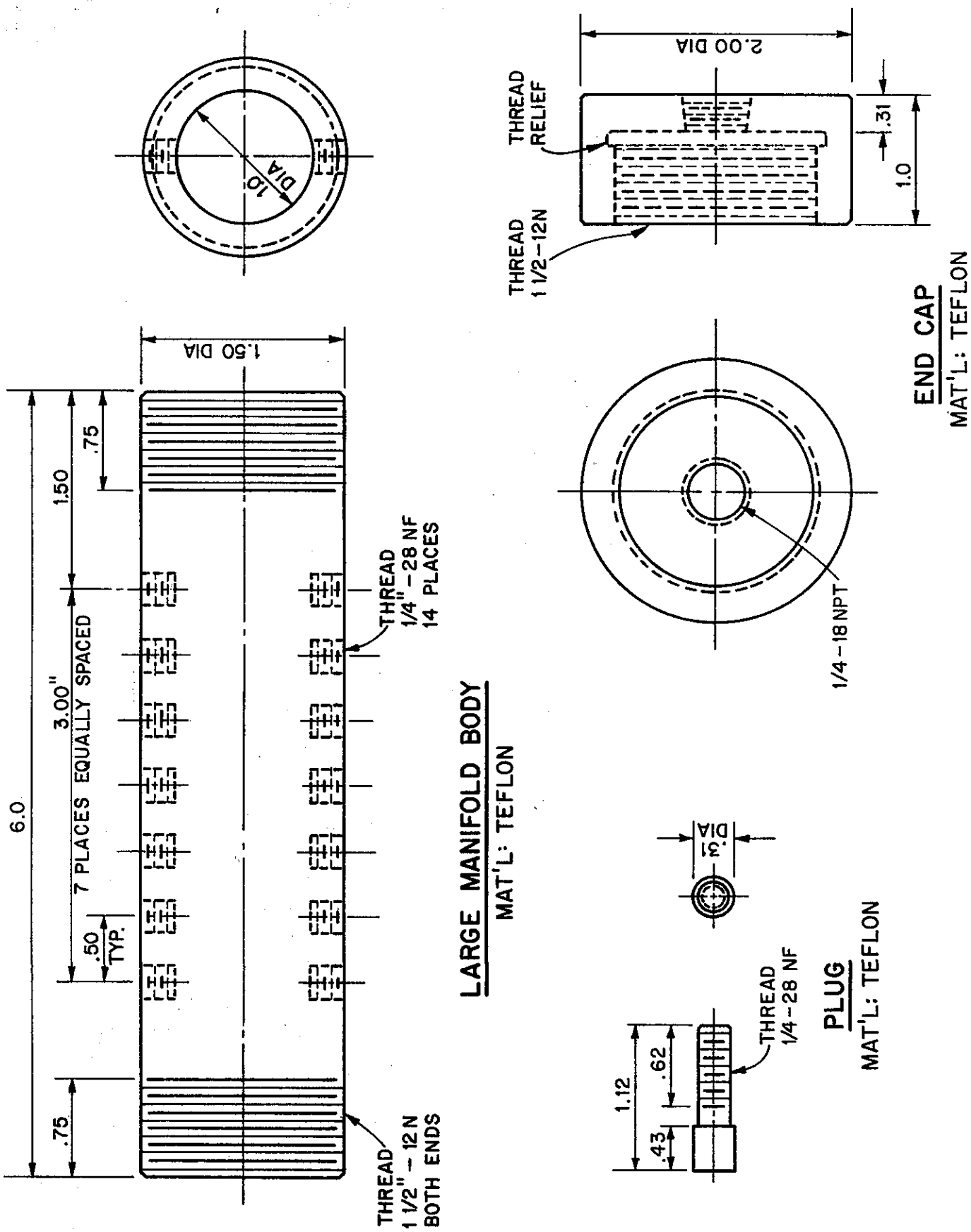

Figure 6

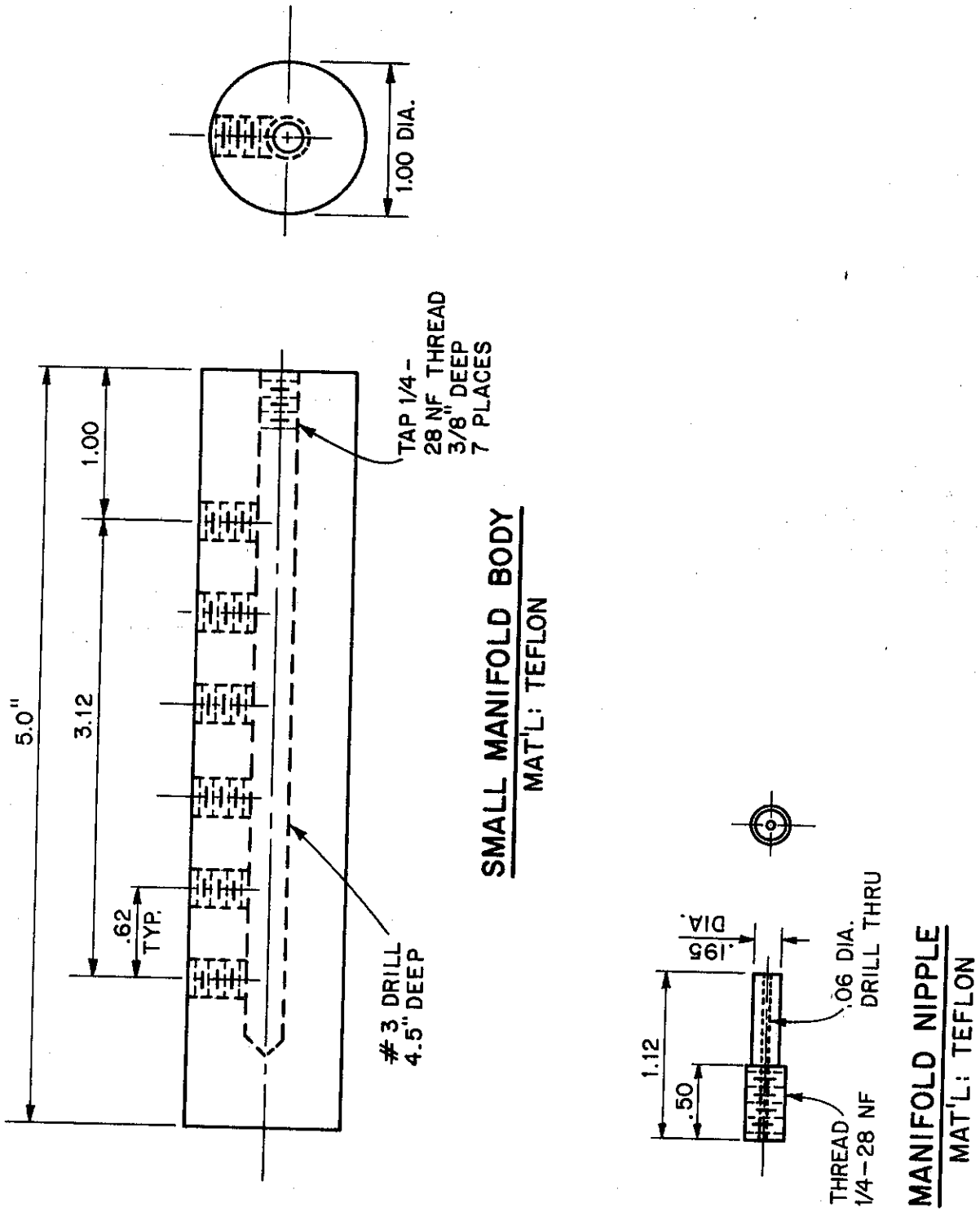

Figure 7

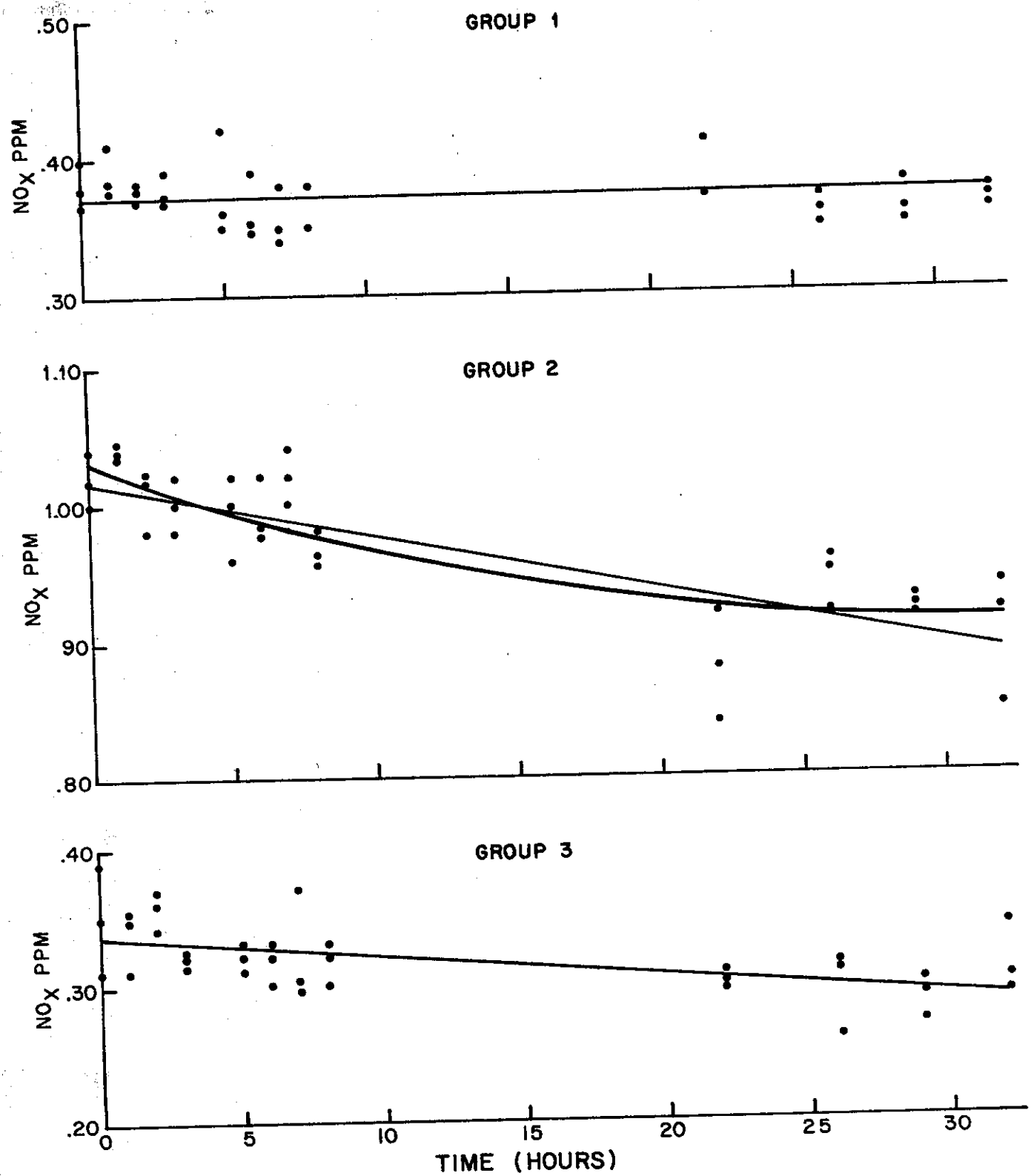

DECAY CURVES FOR
OXIDES OF NITROGEN

Figure 8

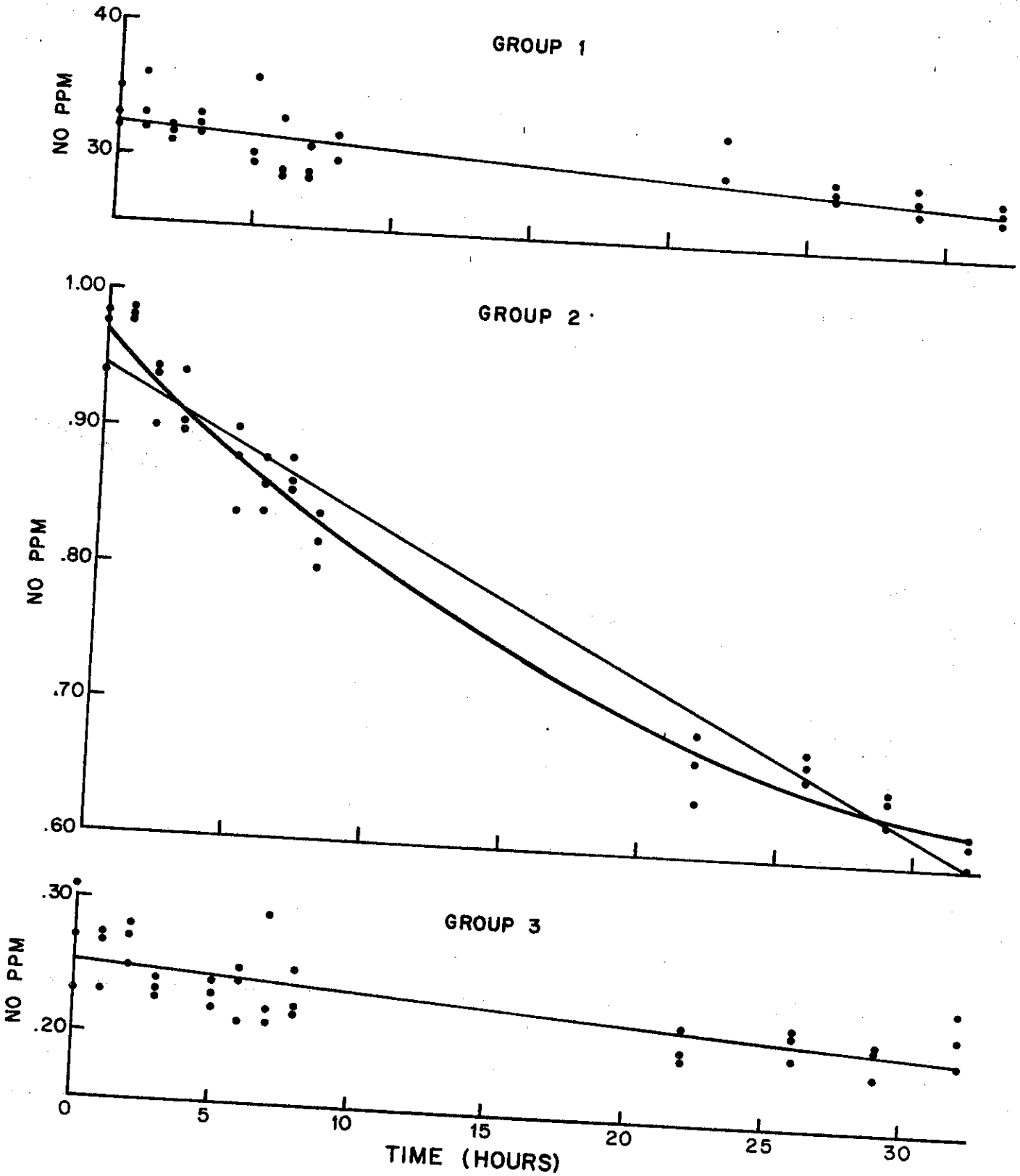

DECAY CURVES FOR NITRIC OXIDE

Figure 9

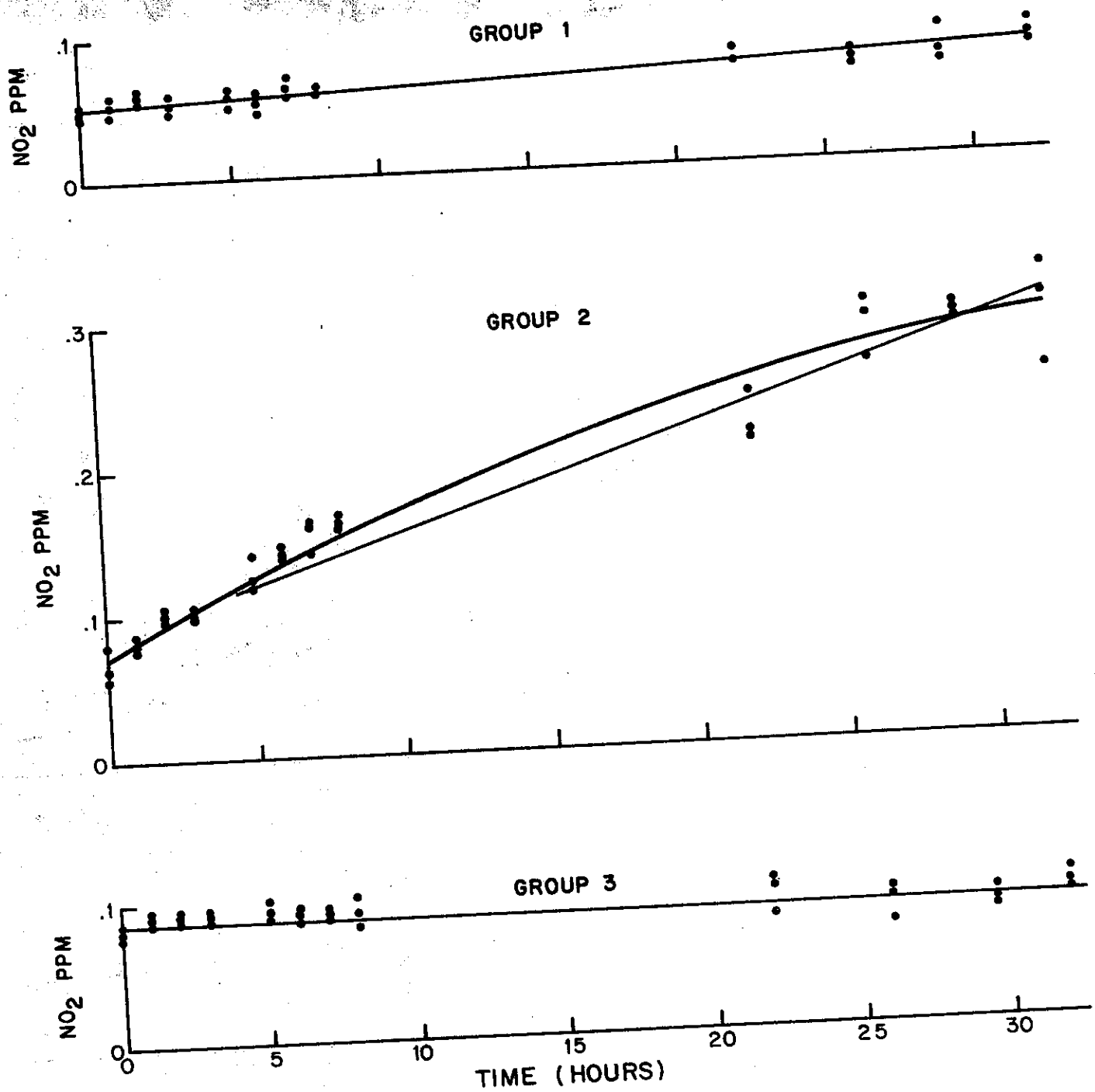

DECAY CURVES FOR NITROGEN DIOXIDE

Figure 10

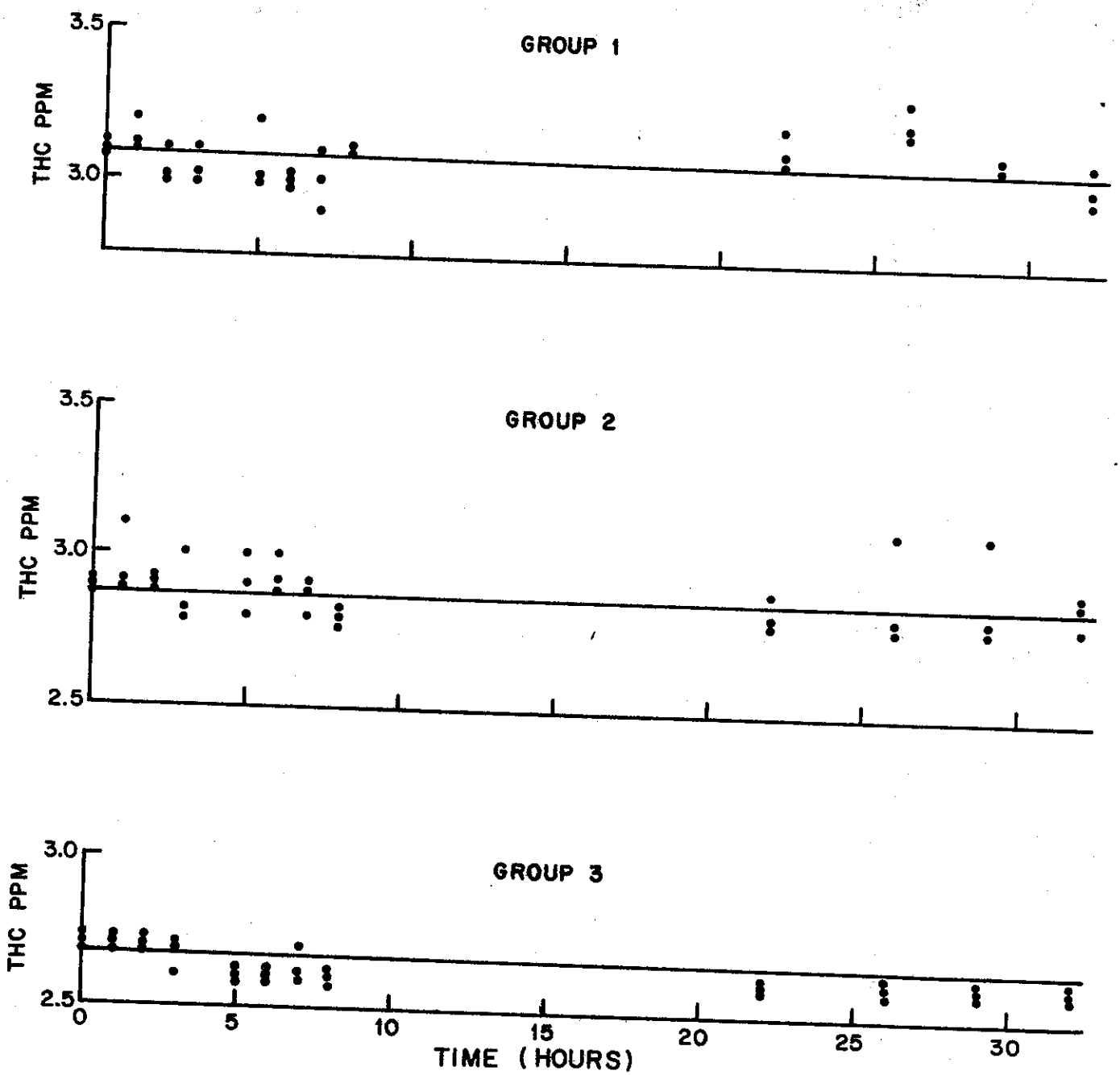

DECAY CURVES FOR
TOTAL HYDROCARBON

Figure 11

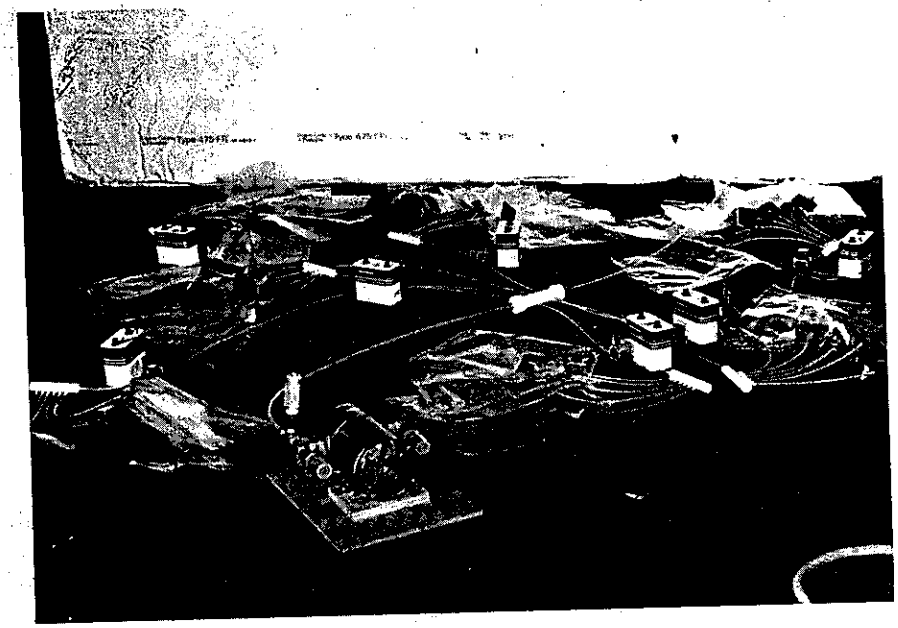

Fig. 12 Sample System

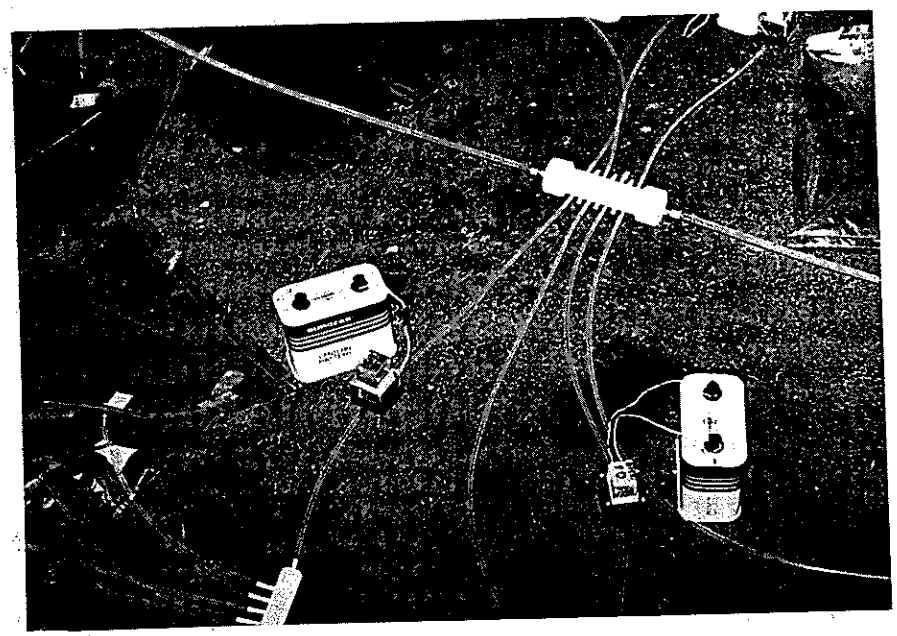

Fig. 13 Distribution Manifold
& Sample Pumps

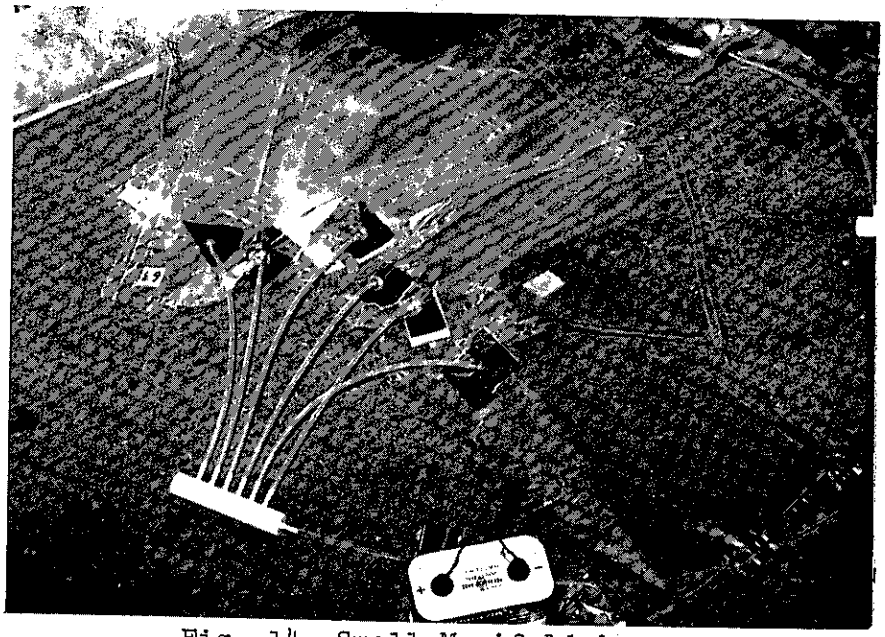

Fig. 14 Small Manifold & Sample Bags

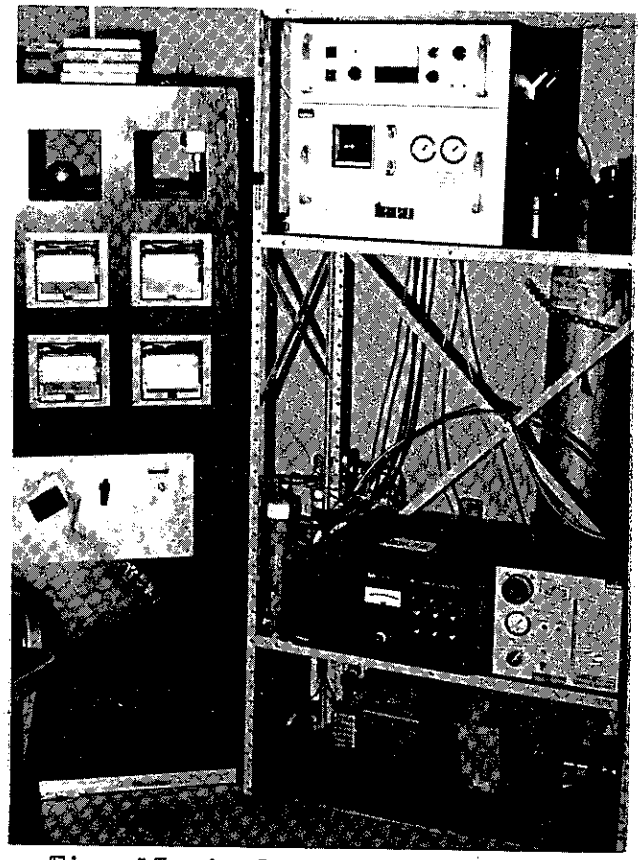

Fig. 15 Analyzers & Support Systems